KIA, THE COMPANY

Now that you are the owner of a **KIA** Vehicle, you'll probably be asked a lot of questions about your vehicle and the company like "What is a **KIA**?," "Who is **KIA**?," "What does '**KIA**' mean?"

Here are some answers. First, **KIA** is the oldest car company in Korea. It's a company that has thousands of employees focused on building high-quality vehicles at affordable prices.

The first syllable, **KI**, in the word "**KIA**" means "to arise from to the world" or "to come up out of to the world". The second syllable, **A**, means "Asia". So, the word **KIA**, means "to arise from" or "to come up out of Asia to the world".

Enjoy your Vehicle!

امداد خودرو نارا
۰۲۱-۸۸۴۶۲۰۸۵
Farmasos.com

FOREWORD

Thank you for choosing a KIA vehicle.

When you require service, remember that your dealer knows your vehicle best. Your dealer has factory-trained technicians, recommended special tools, genuine KIA replacement parts and is dedicated to your complete satisfaction.

Because subsequent owners require this important information as well, this publication should remain with the vehicle if it is sold.

This manual will familiarize you with operational, maintenance and safety information about your new vehicle. It is supplemented by a Warranty and Maintenance book that provides important information on all warranties regarding your vehicle. We urge you to read these publications carefully and follow the recommendations to help assure enjoyable and safe operation of your new vehicle.

KIA offers a great variety of options, components and features for its various models. Therefore, some of the equipment described in this manual, along with the various illustrations, may not be applicable to your particular vehicle.

The information and specifications provided in this manual were accurate at the time of printing. KIA reserves the right to discontinue or change specifications or design at any time without notice and without incurring any obligation. If you have questions, always check with your authorized KIA dealer.

We assure you of our continuing interest in your motoring pleasure and satisfaction in your KIA vehicle.

امداد خودرو فارما
تلفن شبانه روزی: ۰۲۱ ۸۸۸۶۲۰۸۵
FarmaSOS.com

© 2009 KIA MOTORS Corp.

All rights reserved. Reproduction by any means, electronic or mechanical, including photocopying, recording, or by any information storage and retrieval system or translation in whole or part is not permitted without written authorization from KIA MOTORS Corporation.

Printed in Korea

TABLE OF CONTENTS

Introduction	1
Your vehicle at a glance	2
Safety features of your vehicle	3
Features of your vehicle	4
Driving your vehicle	5
What to do in an emergency	6
Maintenance	7
Specifications & Consumer information	8
Index	I

امداد خودرو فارما
تلفن شبانه روزی: ۰۲۱-۸۸۸۶۱۰۸۵
FarmaSOS.com

Introduction 1

How to use this manual / 1-2
Fuel requirements / 1-2
Vehicle break-in process / 1-5
Indicator symbols on the instrument cluster / 1-6

امداد خودرو فارما
تلفن شبانه روزی: ۰۲۱-۸۸۸۶۲۰۸۵
FarmaSOS.com

HOW TO USE THIS MANUAL

A010000AUN

We want to help you get the greatest possible driving pleasure from your vehicle. Your Owner's Manual can assist you in many ways. We strongly recommend that you read the entire manual. In order to minimize the chance of death or injury, you must read the WARNING and CAUTION sections in the manual.

Illustrations complement the words in this manual to best explain how to enjoy your vehicle. By reading your manual, you learn about features, important safety information, and driving tips under various road conditions.

The general layout of the manual is provided in the Table of Contents. A good place to start is the index; it has an alphabetical listing of all information in your manual.

Sections: This manual has eight sections plus an index. Each section begins with a brief list of contents so you can tell at a glance if that section has the information you want.

You will find various WARNINGs, CAUTIONs, and NOTICEs in this manual. These WARNINGs were prepared to enhance your personal safety. You should carefully read and follow ALL procedures and recommendations provided in these WARNINGs, CAUTIONs and NOTICEs.

⚠ WARNING

A WARNING indicates a situation in which harm, serious bodily injury or death could result if the warning is ignored.

⚠ CAUTION

A CAUTION indicates a situation in which damage to your vehicle could result if the caution is ignored.

✻ NOTICE

A NOTICE indicates interesting or helpful information is being provided.

FarmaSOS.com

FUEL REQUIREMENTS

Gasoline engine

A020101AUN

Unleaded

For Europe

For the optimal vehicle performance, we recommend you to use unleaded gasoline with an octane rating of RON (Research Octane Number) 95 / AKI (Anti Knock Index) 91 or higher.

You may use unleaded gasoline with an octane rating of RON 91~94 / AKI 87~90 but it may result in slight performance reduction of the vehicle.

Except Europe

Your new KIA vehicle is designed to use only unleaded fuel having an Octane Rating of RON (Research Octane Number) 91 / AKI (Anti-Knock Index) 87 or higher.

Your new vehicle is designed to obtain maximum performance with UNLEADED FUEL, as well as minimize exhaust emissions and spark plug fouling.

⚠ CAUTION

NEVER USE LEADED FUEL. The use of leaded fuel is detrimental to the catalytic converter and will damage the engine control system's oxygen sensor and affect emission control.

Never add any fuel system cleaning agents to the fuel tank other than what has been specified. (Consult an authorized KIA dealer for details.)

⚠ WARNING

- **Do not "top off" after the nozzle automatically shuts off when refueling.**
- **Always check that the fuel cap is installed securely to prevent fuel spillage in the event of an accident.**

A020102ASA

Leaded (if equipped)

For some countries, your vehicle is designed to use leaded gasoline. When you are going to use leaded gasoline, ask an authorized KIA dealer whether leaded gasoline in your vehicle is available or not.

Octane Rating of leaded gasoline is same with unleaded one.

A020103AUN

Gasoline containing alcohol and methanol

Gasohol, a mixture of gasoline and ethanol (also known as grain alcohol), and gasoline or gasohol containing methanol (also known as wood alcohol) are being marketed along with or instead of leaded or unleaded gasoline.

Do not use gasohol containing more than 10% ethanol, and do not use gasoline or gasohol containing any methanol. Either of these fuels may cause drivability problems and damage to the fuel system.

Discontinue using gasohol of any kind if drivability problems occur.

Vehicle damage or drivability problems may not be covered by the manufacturer's warranty if they result from the use of:

1. Gasohol containing more than 10% ethanol.
2. Gasoline or gasohol containing methanol.
3. Leaded fuel or leaded gasohol.

⚠ CAUTION

Never use gasohol which contains methanol. Discontinue use of any gasohol product which impairs drivability.

A020104AUN

Use of MTBE

KIA recommends avoiding fuels containing MTBE (Methyl Tertiary Butyl Ether) over 15.0% vol. (Oxygen Content 2.7% weight) in your vehicle.

Fuel containing MTBE over 15.0% vol. (Oxygen Content 2.7% weight) may reduce vehicle performance and produce vapor lock or hard starting.

⚠ CAUTION

Your New Vehicle Limited Warranty may not cover damage to the fuel system and any performance problems that are caused by the use of fuels containing methanol or fuels containing MTBE (Methyl Tertiary Butyl Ether) over 15.0% vol. (Oxygen Content 2.7% weight.)

FarmaSOS.com

A020105AUN

Do not use methanol

Fuels containing methanol (wood alcohol) should not be used in your vehicle. This type of fuel can reduce vehicle performance and damage components of the fuel system.

A020106AUN

Gasolines for cleaner air

To help contribute to cleaner air, KIA recommends that you use gasolines treated with detergent additives, which help prevent deposit formation in the engine. These gasolines will help the engine run cleaner and enhance performance of the Emission Control System.

A020107AUN

Operation in foreign countries

If you are going to drive your vehicle in another country, be sure to:

- Observe all regulations regarding registration and insurance.
- Determine that acceptable fuel is available.

Diesel engine

A020201AUN

Diesel fuel

Diesel engine must be operated only on commercially available diesel fuel that complies with EN 590 or comparable standard. (EN stands for "European Norm"). Do not use marine diesel fuel, heating oils, or non-approved fuel additives, as this will increase wear and cause damage to the engine and fuel system. The use of non-approved fuels and / or fuel additives will result in a limitation of your warranty rights.

Diesel fuel of above cetane 52 is used in your vehicle. If two types of diesel fuel are available, use summer or winter fuel properly according to the following temperature conditions.

- Above -5°C(23°F) ... Summer type diesel fuel.
- Below -5°C(23°F) ... Winter type diesel fuel.

Watch the fuel level in the tank very carefully : If the engine stops through fuel failure, the circuits must be completely purged to permit restarting.

⚠ CAUTION

- ***Do not let any gasoline or water enter the tank. This would make it necessary to drain it out and to bleed the lines to avoid jamming the injection pump and damaging the engine.***
- ***In winter, in order to cut down incidents due to freezing, paraffin oil may be added to the fuel if the temperature drops to below -10°C(50°F). Never use more than 20% paraffin oil.***

FarsiaSOS.com

A020202AUN

Biodiesel

Commercially supplied biodiesel blends of no more than 5% biodiesel, commonly known as "B5 biodiesel" may be used in your vehicle if it meets EN 14214 or equivalent specifications. (EN stands for "European Norm"). The use of biofuels made from rapeseed methyl ester (RME), fatty acid methyl ester (FAME), vegetable oil methyl ester (VME) etc. or mixing diesel with biodiesel will cause increased wear or damage to the engine and fuel system. Repair or replacement of worn or damaged components due to the use of non approved fuels will not be covered by the manufactures warranty.

A020202AAM

Biodiesel (for New Zealand)

Commercially supplied biodiesel blends of no more than 5% biodiesel, commonly known as "B5 biodiesel" may be used in your vehicle if it meets EN 14214 or equivalent specifications. (EN stands for "European Norm"). The use of biofuels exceeding 5%, made from rapeseed methyl ester (RME), vegetable oil methyl ester (VME) etc. or mixing diesel exceeding 5% with biodiesel will cause increased wear or damage to the engine and fuel system. Repair or replacement of worn or damaged components due to the use of non approved fuels will not be covered by the manufactures warranty.

تلفن شبانه روزی: ۰۲۱-۷۷۶۲۰۸۵۵
Farnad88.com

⚠ CAUTION

- ***Never use any fuel, whether diesel or B5 biodiesel that fails to meet the latest petroleum industry specification.***
- ***Never use any fuel additives or treatments that are not recommended or approved by the vehicle manufacturer.***

VEHICLE BREAK-IN PROCESS

A030000AUN

No special break-in period is needed. By following a few simple precautions for the first 1,000 km (600 miles) you may add to the performance, economy and life of your vehicle.

- Do not race the engine.
- While driving, keep your engine speed (rpm, or revolutions per minute) between 2,000 rpm and 4,000 rpm (gasoline engine)/1,000 rpm and 3,000 rpm (diesel engine).
- Do not maintain a single speed for long periods of time, either fast or slow. Varying engine speed is needed to properly break-in the engine.
- Avoid hard stops, except in emergencies, to allow the brakes to seat properly.
- Don't let the engine idle longer than 3 minutes at one time.
- Don't tow a trailer during the first 2,000 km (1,200 miles) of operation.

INDICATOR SYMBOLS ON THE INSTRUMENT CLUSTER

A050000ASA


Door ajar warning light


Seat belt warning light


High beam indicator


Passenger's front air bag OFF indicator (if equipped)


Turn signal indicator



ESP indicator (if equipped)



ESP OFF indicator (if equipped)



ABS warning light (if equipped)



Parking brake & Brake fluid warning light


Engine oil pressure warning light


Charging system warning light


Malfunction indicator (if equipped)


Air bag warning light (if equipped)


Immobilizer indicator (if equipped)


Tailgate open warning light


Low fuel level warning light


Glow indicator (Diesel only)


Fuel filter warning light (Diesel only)



Overspeed warning light (if equipped)



Electric Power Steering (EPS) system warning light (if equipped)


Engine coolant temperature indicator

* For more detailed explanations, refer to "Instrument cluster" in section 4.

امداد خودرو فارما
۰۲۱-۸۸۸۶۲۰۸۵ تلفن شبانه روزی
FarmaSos.com

Your vehicle at a glance 2

Interior overview / 2-2
Instrument panel overview / 2-3
Engine compartment / 2-4

امداد خودرو فارما
تلفن شبانه روزی: ۰۲۱-۸۸۸۶۲۰۸۵
FarmaSOS.com

INTERIOR OVERVIEW



1. Door lock/unlock lever.....4-8
2. Outside rearview mirror control switch*.....4-24
3. Power window lock button*.....4-14
4. Power window switches*.....4-12
5. Vent controls.....4-54, 63
6. Head lamp leveling device*.....4-45
7. ESP OFF button*.....5-21
8. Steering wheel.....4-19
9. Steering wheel tilt*.....4-21
10. Fuel filler lid release lever.....4-17

* : if equipped

OSA010001K

B010000BSA

FarmaSOS.com

INSTRUMENT PANEL OVERVIEW



امداد خودرو
تلفن شبانه روزی: ۰۲۱-۸۸۶۲۰۸۵
FarmaSOS.com

1. Instrument cluster.....4-25
2. Light control / Turn signals 4-41
3. Horn 4-21
4. Wiper/Washer.....4-46
5. Driver's front air bag* 3-42
6. Ignition switch.....5-4
7. Hazard warning flasher switch..4-41, 6-2
8. Climate control system*.....4-52, 4-60
9. Parking brake lever 5-17
10. Brake pedal 5-16
11. Accelerator pedal
12. Shift lever 5-7, 5-10
13. Seat warmer* 3-7
14. Passenger's front air bag*.....3-42
15. Glove box 4-70
16. Hood release lever 4-15
17. Rear window defroster button 4-51
18. Front fog light button*.....4-44
19. Rear fog light button* 4-44

* : if equipped

OSA010002K

B020000BSA

ENGINE COMPARTMENT

■ **Gasoline Engine**

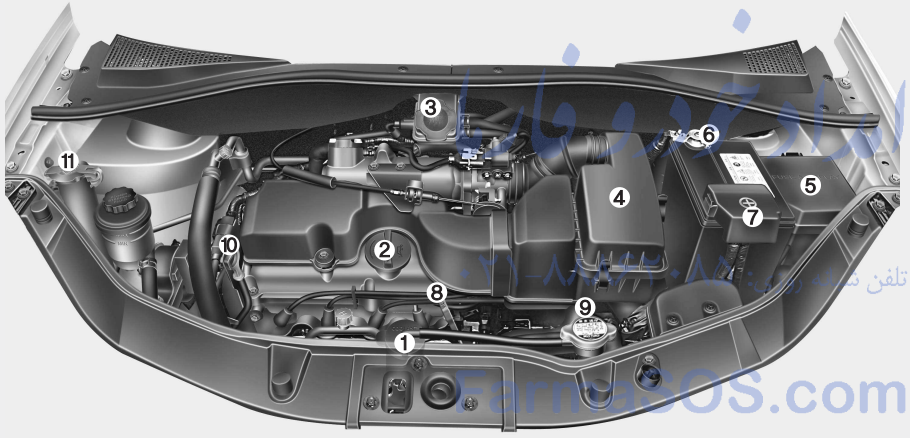

1. Engine coolant reservoir.....7-25
2. Engine oil filler cap 7-24
3. Brake fluid reservoir.....7-27
4. Air cleaner.....7-34
5. Fuse box 7-52
6. Negative battery terminal.....7-39
7. Positive battery terminal 7-39
8. Automatic transaxle fluid dipstick* 7-29
9. Radiator cap 7-25
10. Engine oil dipstick 7-23
11. Windshield washer fluid reservoir ...7-31

* : if equipped

* The actual engine compartment in the vehicle may differ from the illustration.

OSA010003-2

B030000ASA

FarmaSOS.com

■ **Diesel Engine**

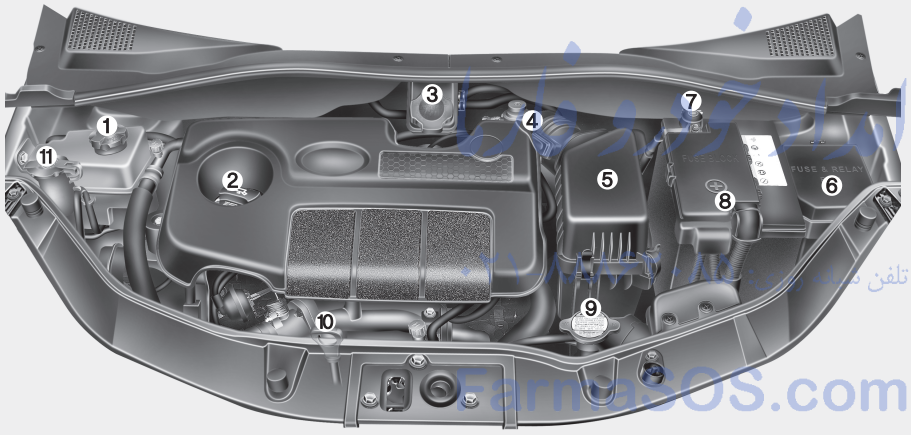

1. Engine coolant reservoir 7-25
2. Engine oil filler cap.....7-24
3. Brake fluid reservoir 7-27
4. Fuel filter 7-32
5. Air cleaner.....7-34
6. Fuse box 7-52
7. Negative battery terminal.....7-39
8. Positive battery terminal.....7-39
9. Radiator cap.....7-25
10. Engine oil dipstick 7-23
11. Windshield washer fluid reservoir ..7-31

* The actual engine compartment in the vehicle may differ from the illustration.

OSA077002

FarmaSOS.com

Seats / 3-2
Seat belts / 3-14
Child restraint system / 3-26
Air bag - supplemental restraint system / 3-36

Safety features of your vehicle 3

امداد خودرو فارما
تلفن شبانه روزی: ۰۲۱-۸۸۸۶۲۰۸۵
FarmaSOS.com

SEATS

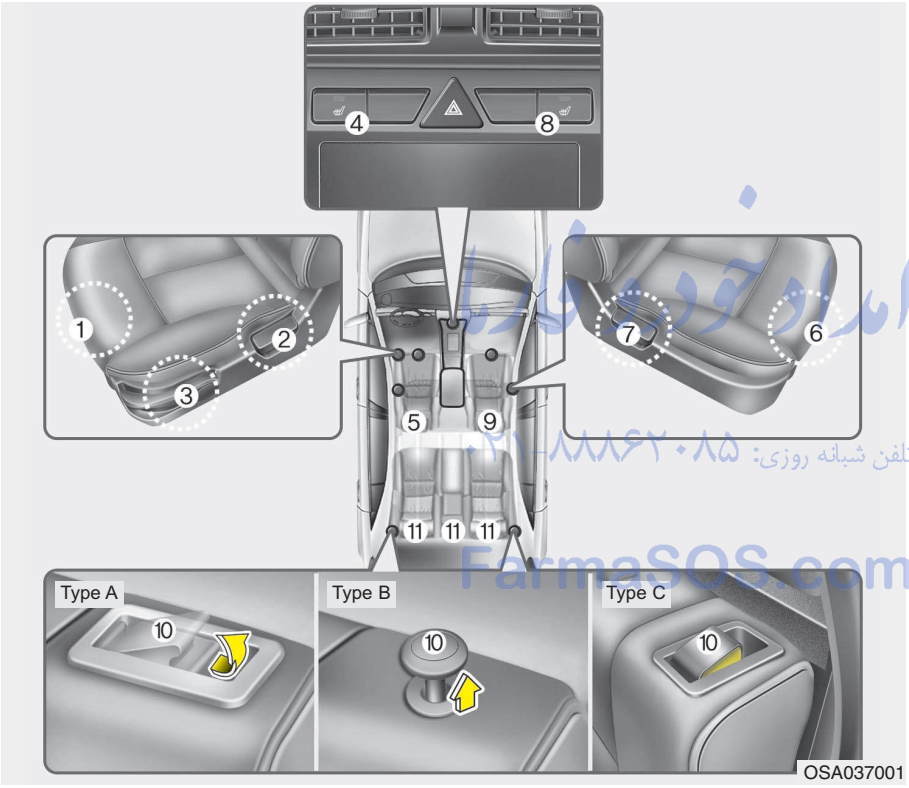

C010000ASA

Driver's seat

(1) Forward and backward
(2) Seatback angle
(3) Seat cushion height*
(4) Seat warmer*
(5) Headrest

Front passenger's seat

(6) Forward and backward
(7) Seatback angle
(8) Seat warmer*
(9) Headrest

Rear seat

(10) Seatback folding lever*
(11) Headrest*

*: if equipped

تلفن شبانه روزی: ۰۹۱-۸۸۶۲۰۸۵
FarmaSOS.com

⚠ WARNING - Loose objects

Loose objects in the driver's foot area could interfere with the operation of the foot pedals, possibly causing an accident. Do not place anything under the front seats.

⚠ WARNING - Uprighting seat

When you return the seatback to its upright position, hold the seatback and return it slowly and be sure there are no other occupants around the seat. If the seatback is returned without being held and controlled, the back of the seat could spring forward resulting in accidental injury to a person struck by the seatback.

⚠ WARNING - Driver responsibility for passengers

Riding in a vehicle with the seatback reclined could lead to serious or fatal injury in an accident. If a seat is reclined during an accident, the occupant's hips may slide under the lap portion of the seat belt applying great force to the unprotected abdomen. Serious or fatal internal injuries could result. The driver must advise the passenger to keep the seatback in an upright position whenever the vehicle is in motion.

تلفن شبانه روزی: ۰۲۱-۸۸۸۶۲۰۸۵
FarmaSOS.com

⚠ WARNING - Driver's seat

- **Never attempt to adjust the seat while the vehicle is moving. This could result in loss of control, and an accident causing death, serious injury, or property damage.**
- **Do not allow anything to interfere with the normal position of the seatback. Storing items against a seatback or in any other way interfering with proper locking of a seatback could result in serious or fatal injury in a sudden stop or collision.**
- **Always drive and ride with your seatback upright and the lap portion of the seat belt snug and low across the hips. This is the best position to protect you in case of an accident.**
- **In order to avoid unnecessary and perhaps severe air bag injuries, always sit as far back as possible from the steering wheel while maintaining comfortable control of the vehicle. We recommend that your chest be at least 250 mm (10 inches) away from the steering wheel.**

⚠ WARNING - Rear seatbacks

- **The rear seatback must be securely latched. If not, passengers and objects could be thrown forward resulting in serious injury or death in the event of a sudden stop or collision.**
- **Luggage and other cargo should be laid flat in the cargo area. If objects are large, heavy, or must be piled, they must be secured. Under no circumstances should cargo be piled higher than the seatbacks. Failure to follow these warnings could result in serious injury or death in the event of a sudden stop, collision or rollover.**
- **No passenger should ride in the cargo area or sit or lie on folded seatbacks while the vehicle is moving. All passengers must be properly seated in seats and restrained properly while riding.**

(Continued)

(Continued)

- **When resetting the seatback to the upright position, make sure it is securely latched by pushing it forward and backwards.**
- **To avoid the possibility of burns, do not remove the carpet in the cargo area. Emission control devices beneath this floor generate high temperatures.**

⚠ WARNING

After adjusting the seat, always check that it is securely locked into place by attempting to move the seat forward or backward without using the lock release lever. Sudden or unexpected movement of the driver's seat could cause you to lose control of the vehicle resulting in an accident.

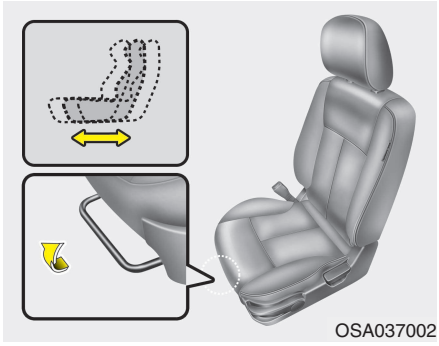

OSA037002

Front seat adjustment

C010101SA

Forward and backward

To move the seat forward or backward:

1. Pull the seat slide adjustment lever that is under the front edge of the seat cushion up and hold it.
2. Slide the seat to the position you desire.
3. Release the lever and make sure the seat is locked in place.

Adjust the seat before driving, and make sure the seat is locked securely by trying to move forward and backward without using the lever. If the seat moves, it is not locked properly.

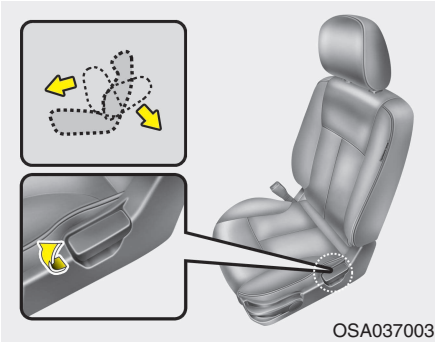
OSA037003

C010102AUN

Seatback angle

To recline the seatback:

1. Lean forward slightly and lift up the seatback recline lever located on the outside of the seat at the rear.
2. Carefully lean back on the seat and adjust the seatback to the position you desire.
3. Release the lever and make sure the seatback is locked in place. (The lever MUST return to its original position for the seatback to lock.)

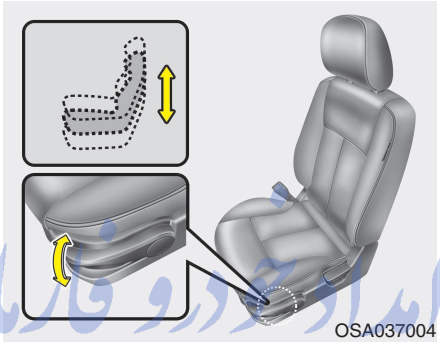
OSA037004

C010103AUN

Seat cushion height (for driver's seat) (if equipped)

To change the height of the seat cushion, move the lever that is located on the outside of the seat cushion upwards or downwards.

- To lower the seat cushion, push the lever down several times.
- To raise the seat cushion, pull the lever up several times.

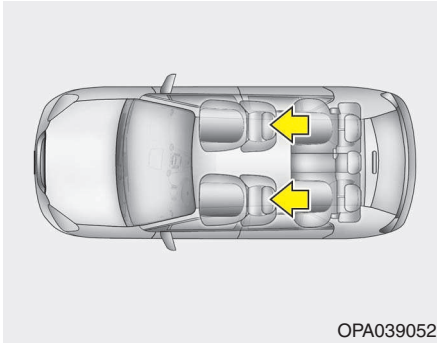
OPA039052

C010104BUN

Headrest

The driver's and front passenger's seats are equipped with a headrest for the occupant's safety and comfort.

The headrest not only provides comfort for the driver and front passenger, but also helps to protect the head and neck in the event of a collision.

FarsaSOS.com

⚠ WARNING

- **For maximum effectiveness in case of an accident, the headrest should be adjusted so the middle of the headrest is at the same height of the center of gravity of an occupant's head. Generally, the center of gravity of most people's head is similar with the height of the top of their eyes. Also, adjust the headrest as close to your head as possible. For this reason, the use of a cushion that holds the body away from the seatback is not recommended.**
- **Do not operate the vehicle with the headrests removed as severe injury to the occupants may occur in the event of an accident. Headrests may provide protection against neck injuries when properly adjusted.**
- **Do not adjust the headrest position of the driver's seat while the vehicle is in motion.**

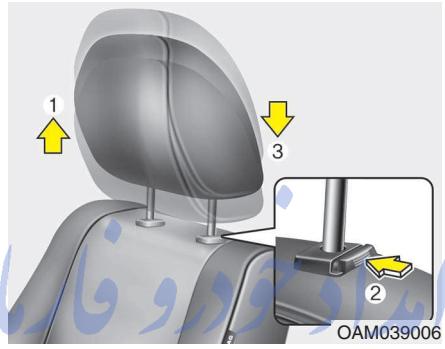

OAM039006

Adjusting the height up and down

To raise the headrest, pull it up to the desired position (1). To lower the headrest, push and hold the release button (2) and lower the headrest to the desired position (3).

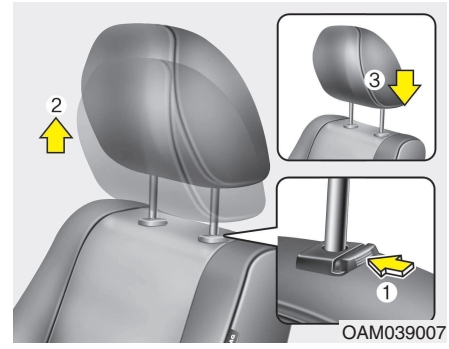

OAM039007

Removal

To remove the headrest, raise it as far as it can go then press the release button (1) while pulling upward (2).

To reinstall the headrest, put the headrest poles (3) into the holes while pressing the release button (1). Then adjust it to the appropriate height.

⚠ WARNING

Make sure the headrest locks in position after adjusting it to properly protect the occupants.

FarmaSOS.com

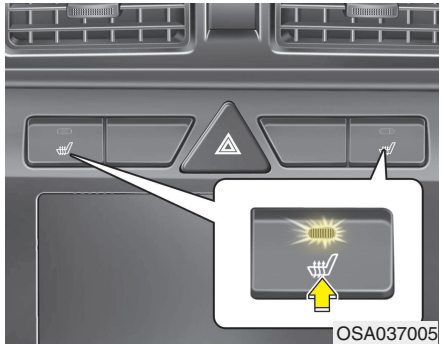

C010107AUN

Seat warmer (if equipped)

The seat warmer is provided to warm the front seats during cold weather. With the ignition switch in the ON position, push either of the switches to warm the driver's seat or the front passenger's seat.

During mild weather or under conditions where the operation of the seat warmer is not needed, keep the switches in the OFF position.

✻ NOTICE

With the seat warmer switch in the ON position, the heating system in the seat turns off or on automatically depending on the seat temperature.

⚠ CAUTION

- ***When cleaning the seats, do not use an organic solvent such as thinners, benzene, alcohol or gasoline. Doing so may damage the surface of the heater or seats.***
- ***To prevent overheating the seat warmer, do not place blankets, cushions or seat covers on the seats while the seat warmer is in operation.***
- ***Do not place heavy or sharp objects on seats equipped with seat warmers. Damage to the seat warming components could occur.***

امداد خودرو ما
تلفن شبانه روزی: ۰۲۱-۸۸۸۶۲۰۸۵
FarmaSOS.com

⚠ WARNING - Seat warmer burns

Passengers should use extreme caution when using seat warmers due to the possibility of excess heating or burns. The occupants must be able to feel if the seat is becoming too warm and to turn the seat warmer off. In particular, the driver must exercise extreme care for the following types of passengers:

1. **Infants, children, elderly or disabled persons, or hospital outpatients**
2. **Persons with sensitive skin or those that burn easily**
3. **Fatigued individuals**
4. **Intoxicated individuals**
5. **Individuals taking medication that can cause drowsiness or sleepiness (sleeping pills, cold tablets, etc.)**



C010108AAM

Seatback pocket (passenger's seat, if equipped)

⚠ WARNING - Seatback pockets

Do not put heavy or sharp objects in the seatback pocket. In an accident they could come loose from the pocket and injure vehicle occupants.

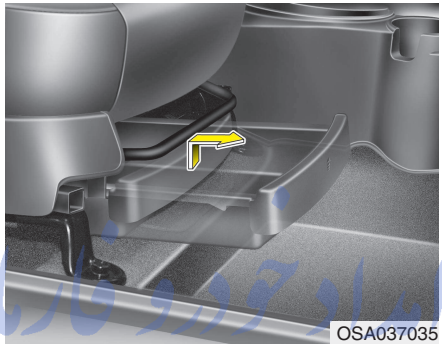

C010109AUN

Passenger seat under tray (if equipped)

To open the tray, pull up the lever and pull out the tray forward.

⚠ WARNING - Flammable materials

Do not store cigarette lighters, propane cylinders, or other flammable/explosive materials in the tray. These items may catch fire and/or explode if the vehicle is exposed to hot temperatures for extended periods.

⚠ WARNING

- **Since stored items may move while driving, be sure to position them in the tray so that they do not make noise or cause a potential safety hazard when the vehicle is moving.**
- **Always keep the tray closed while driving. Do not place many items in the tray that the tray can not close securely.**

⚠ CAUTION

To avoid possible theft, do not leave valuables in the tray.

The tray can be used to store small items required by the driver or passengers.

FarmaSOS.com

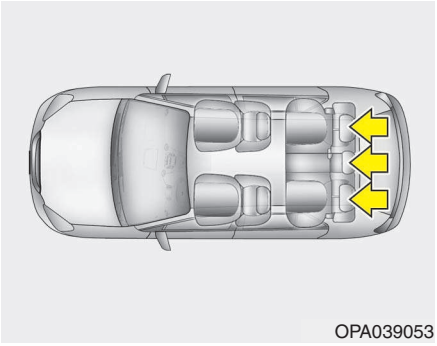
OPA039053

C010303BPA

Rear seat adjustment

Headrest (if equipped)

The rear seat(s) is equipped with headrests in all the seating positions for the occupant's safety and comfort.

The headrest not only provides comfort for passengers, but also helps to protect the head and neck in the event of a collision.

⚠ WARNING

- **For maximum effectiveness in case of an accident, the headrest should be adjusted so the middle of the headrest is at the same height of the center of gravity of an occupant's head. Generally, the center of gravity of most people's head is similar with the height of the top of their eyes. Also adjust the headrest as close to your head as possible. The use of a cushion that holds the body away from the seatback is not recommended.**
- **Do not operate the vehicle with the headrests removed as severe injury to an occupant may occur in the event of an accident. Headrests may provide protection against severe neck injuries when properly adjusted.**

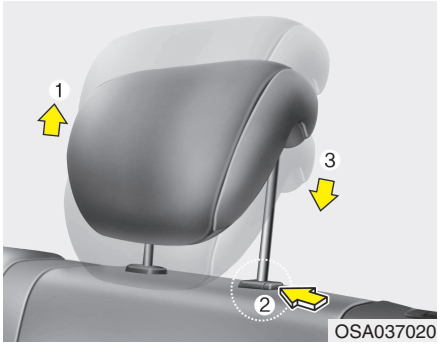

OSA037020

Adjusting the height up and down

To raise the headrest, pull it up to the desired position (1). To lower the headrest, push and hold the release button (2) and lower the headrest to the desired position (3).



Removal

To remove the headrest, raise it as far as it can go then press the release button (1) while pulling upward (2).

To reinstall the headrest, put the headrest poles into the holes while pressing the release button (1). Then adjust it to the appropriate height.

⚠ WARNING

Make sure the headrest locks in position after adjusting it to properly protects the occupants.

C010307ASA

Folding the rear seat

The rear seatbacks (or cushions) may be folded to facilitate carrying long items or to increase the luggage capacity of the vehicle.

⚠ WARNING

The purpose of the fold-down rear seatbacks (or cushions) is to allow you carry longer objects that could not be accommodated in the cargo area.

Never allow passengers sit on top of the folded down seatback while the car is moving as this is not a proper seating position and no seat belts are available for use. This could result in serious injury or death in case of an accident or sudden stop. Objects carried on the folded down seatback should not extend higher than the top of the front seatbacks. Doing this could allow cargo to slide forward and cause injury or damage during sudden stops.

To fold the rear seat cushion and seat back:

The rear seatbacks may be folded forward to provide additional cargo space and to provide access to the cargo area.

- To raise the seatback, lift and push it firmly until it clicks into place.
- When you return the seatback to its upright position, reposition the rear safety belts so that they can be used by rear seat passengers.

⚠ WARNING

Do not fold the rear seat, if the driver's position is not properly set according to the driver's physical figure after folding the rear seat. A sudden stop or collision may cause injury.

1. Insert the rear seat belt buckle in the pocket between the rear seatback and cushion (if equipped), and insert the rear seat belt webbing in the guide to prevent the seat belt from being damaged.
2. Set the front seatback to the upright position and slide the front seat forward.

⚠ CAUTION

When folding or unfolding the rear seat, make sure to move the front seat fully forward. If there are not enough space to fold the rear seat, never fold it by force. It will cause damage to the headrest or the related parts of the seat.

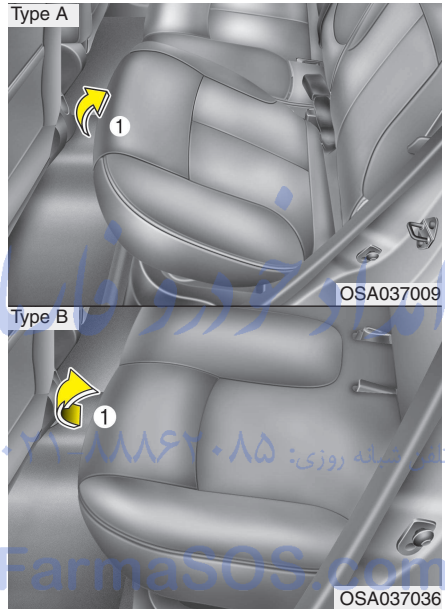

3. Lift up the front part of the seat cushion (1). (if equipped)

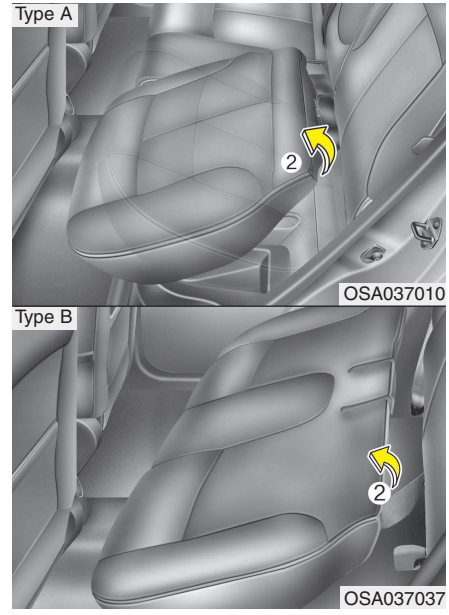

4. Lift up the rear part of the seat cushion (2). (if equipped)

FarmaSOS.com

Type A

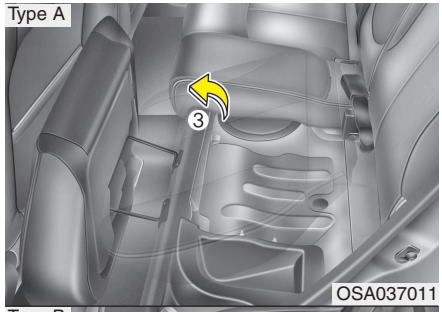

Type B

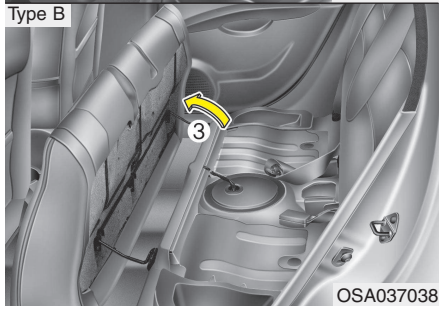

5. Move the seat cushion firmly until it clicks (3). (if equipped)

Type A

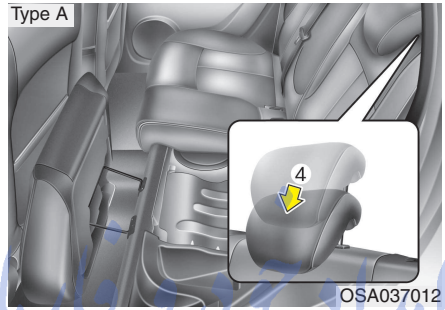

6. Lower the headrest as low as possible (4). (if equipped)

تلفن شبانه روزی: ۰۲۱-۸۸۸۶۲۰۸۵
FarmaSOS.com

Type A

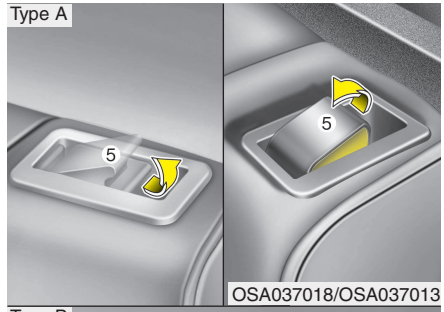

Type B



7. Pull up the lock release lever (4), (5).

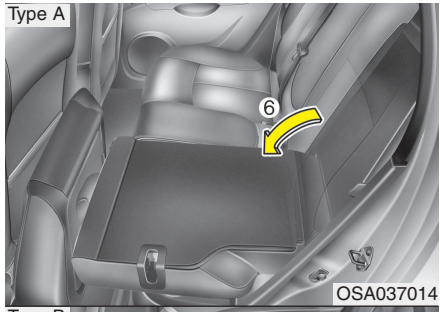

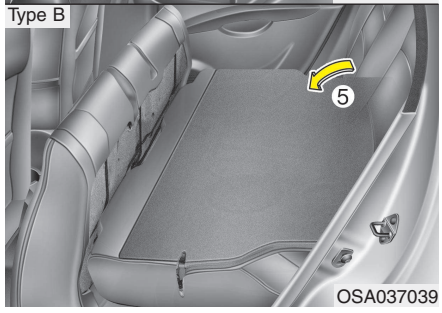

8. Fold the seatback forward and down firmly (5), (6).

⚠ WARNING

After folding the rear seat, unless the driver's position is properly set according to the driver's physical figure, do not fold the rear seat. It may increase body injuries in a sudden stop or collision.

To unfold the rear seat:

1. Lift and push the seatback backward firmly until it clicks into place.
2. Move and push the seat cushion downward firmly to the proper position.
3. Replace the rear seat belt to the proper position.

امداد خودرو فارما
تلفن شبانه روزی: ۰۲۱۸۸۸۶۴۰۸۵
FarmaSOS.com



Adjusting the seatback recliner (6:4 split seat only)

To recline the seatback;

1. Pull up the lock release lever.

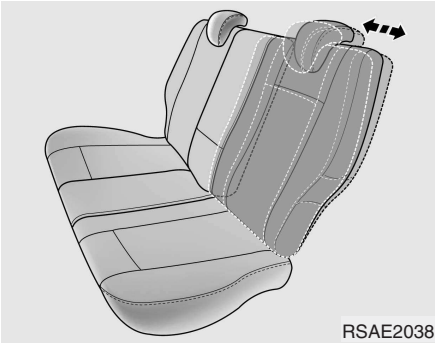
RSAE2038

2. Adjust the seatback to the position you desire.
3. Make sure the seatback is locked securely by trying to move forward and backward without using the lock release lever. If the seatback moves, it is not locked properly.

⚠ WARNING

When you return the rear seatback to its upright position after being folded down:

Be careful not to damage the seat belt webbing or buckle. Do not allow the seat belt webbing or buckle to get caught or pinched in the rear seat. Ensure that the seat-back is completely locked into its upright position by pushing on the top of the seatback. Otherwise, in an accident or sudden stop, the seat could fold down and allow cargo enter the passenger com-partment, which could result in serious injury or death.

⚠ CAUTION - Damaging rear seat belt buckles

When you fold the rear seatback, insert the buckle in the pocket between the rear seatback and cushion. Doing so can prevent the buckle from being damaged by the rear seatback.

⚠ CAUTION - Rear seat belts

When returning the rear seatbacks to the upright position, remember to return the rear shoulder belts to their proper position.

⚠ WARNING - Cargo

Cargo should always be secured to prevent it from being thrown about the vehicle in a collision and caus-ing injury to the vehicle occupants. Do not place objects in the rear seats, since they cannot be proper-ly secured and may hit the front seat occupants in a collision.

⚠ WARNING - Cargo loading

Make sure the engine is off, the automatic transaxle is in P (Park) and the parking brake is securely applied whenever loading or unloading cargo. Failure to take these steps may allow the vehicle to move if the shift lever is inadver-tently moved to another position.

SEAT BELTS

C020100AUN

Seat belt restraint system

⚠ WARNING

- For maximum restraint system protection, the seat belts must always be used whenever the car is moving.
- Seat belts are most effective when seatbacks are in the upright position.
- Children age 12 and under must always be properly restrained in the rear seat. Never allow children to ride in the front passenger seat. If a child over 12 must be seated in the front seat, he/she must be properly belted and the seat should be moved as far back as possible.
- Never wear the shoulder belt under your arm or behind your back. An improperly positioned shoulder belt can cause serious injuries in a crash. The shoulder belt should be positioned midway over your shoulder across your collarbone.

(Continued)

(Continued)

- Avoid wearing twisted seat belts. A twisted belt can't do its job as well. In a collision, it could even cut into you. Be sure the belt webbing is straight and not twisted.
- Be careful not to damage the belt webbing or hardware. If the belt webbing or hardware is damaged, replace it.

⚠ WARNING

Seat belts are designed to bear upon the bony structure of the body, and should be worn low across the front of the pelvis, or the pelvis, chest and shoulders, as applicable; wearing the lap section of the belt across the abdominal area must be avoided.

Seat belts should be adjusted as firmly as possible, consistent with comfort, to provide the protection for which they have been designed.

A slack belt will greatly reduce the protection afforded to the occupant.

(Continued)

(Continued)

Care should be taken to avoid contamination of the webbing with polishes, oils and chemicals and particularly battery acid. Cleaning may safely be carried out using mild soap and water. The belt should be replaced if webbing becomes frayed, contaminated or damaged. It is essential to replace the entire assembly after it has been worn in a severe impact even if damage to the assembly is not obvious. Belts should not be worn with straps twisted. Each seat belt assembly must only be used by one occupant; it is dangerous to put a belt around a child being carried on the occupant's lap.

⚠ WARNING

No modifications or additions should be made by the user which will either prevent the seat belt adjusting devices from operating to remove slack, or prevent the seat belt assembly from being adjusted to remove slack.



C020101ASA

Seat belt warning

Type A

As a reminder to the driver, the seat belt warning light will blink for approximately 6 seconds each time you turn the ignition switch ON regardless of belt fastening.

If the driver's seat belt is unfastened after the ignition switch is ON, the seat belt warning light blinks again for approximately 6 seconds.

If the driver's seat belt is not fastened when the ignition switch is turned ON or if it is unfastened after the ignition switch is ON, the seat belt warning chime will sound for approximately 6 seconds. At this time, if the seat belt is fastened, the chime will stop immediately. (if equipped)

Type B (for Europe only, if equipped)

As a reminder to the driver, the driver's seat belt warning light will blink or illuminate for approximately 6 seconds each time you turn the ignition switch ON regardless of belt fastening.

If the driver's seat belt is not fastened when the ignition switch is turned ON or if it is disconnected after the ignition switch is turned ON, the corresponding seat belt warning light will blink or illuminate until the belt is fastened.

If the driver's seat belt is not fastened when the ignition switch is turned ON and you drive over 9 km/h (6 mph), the seat belt warning chime will sound for approximately 100 seconds after the warning light blinks for approximately 1 minute.

If the driver's seat belt is disconnected after the ignition switch is turned ON and you drive over 9 km/h (6 mph), the seat belt warning chime will sound for approximately 100 seconds.

But, if the driver's seat belt is connected and disconnected twice within 9 seconds after the belt is fastened, the driver's seat belt warning light and chime will not operate.

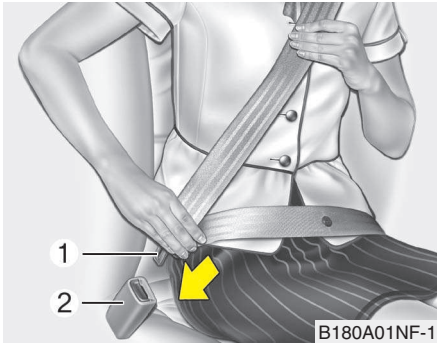

C020102BPA

Lap/shoulder belt

To fasten your seat belt:

To fasten your seat belt, pull it out of the retractor and insert the metal tab (1) into the buckle (2). There will be an audible "click" when the tab locks into the buckle.

The seat belt automatically adjusts to the proper length only after the lap belt portion is adjusted manually so that it fits snugly around your hips. If you lean forward in a slow, easy motion, the belt will extend and let you move around. If there is a sudden stop or impact, however, the belt will lock into position. It will also lock if you try to lean forward too quickly.

✻ NOTICE

If you are not able to pull out the safety belt from the retractor, firmly pull the belt out and release it. Then you will be able to pull the belt out smoothly.

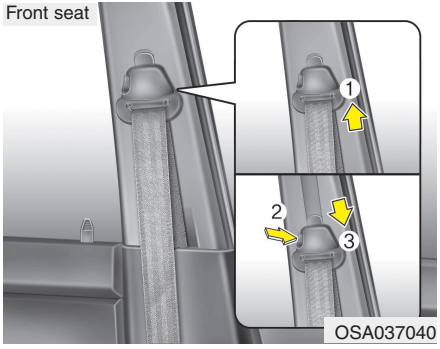

OSA037040

Height adjustment (if equipped)

You can adjust the height of the shoulder belt anchor to one of the 4 positions for maximum comfort and safety.

The height of the adjusting seat belt should not be too close to your neck. The shoulder portion should be adjusted so that it lies across your chest and midway over your shoulder near to the door and not your neck.

To adjust the height of the seat belt anchor, lower or raise the height adjuster to an appropriate position.

To raise the height adjuster, pull it up (1). To lower it, push it down (3) while pressing the height adjuster button (2).

Release the button to lock the anchor into position. Try sliding the height adjuster to make sure that it has locked into position.

امداد خودرو فارما
FarmaSOS.com

⚠ WARNING

- **Verify if the shoulder belt anchor is locked into position at the appropriate height. Never position the shoulder belt across your neck or face. Improperly positioned seat belts can cause serious injuries in an accident.**
- **Failure to replace seat belts after an accident could leave you with damaged seat belts that will not provide protection in the event of another collision leading to personal injury or death. Replace your seat belts after being in an accident as soon as possible.**

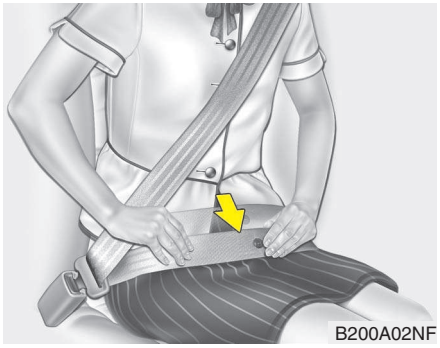
B200A02NF

⚠ WARNING

You should place the lap belt portion as low as possible and snugly across your hips, not on your waist. If the lap belt is located too high on your waist, it may increase the chance of injury in the event of a collision. Both arms should not be under or over the belt. Rather, one should be over and the other under, as shown in the illustration.

Never wear the arm near the door side under the seat belt.

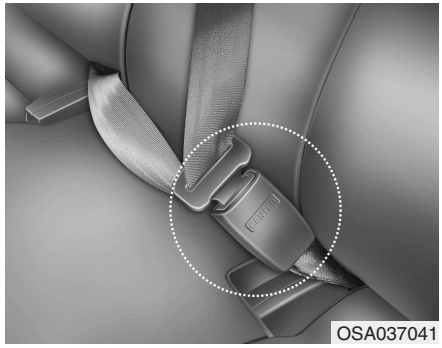
OSA037041

When using the rear center seat belt, the buckle with the “CENTER” mark must be used (if equipped).

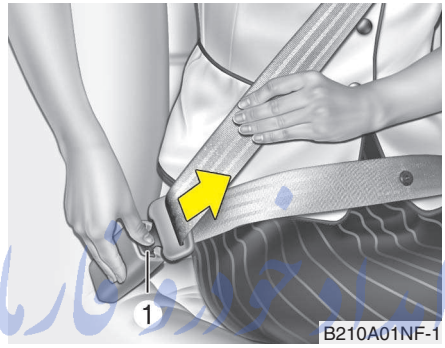

B210A01NF-1

To release the seat belt:

The seat belt is released by pressing the release button (1) of the buckle. When it is released, the belt should automatically draw back into the retractor.

If this does not happen, check if the belt is twisted, then try again.

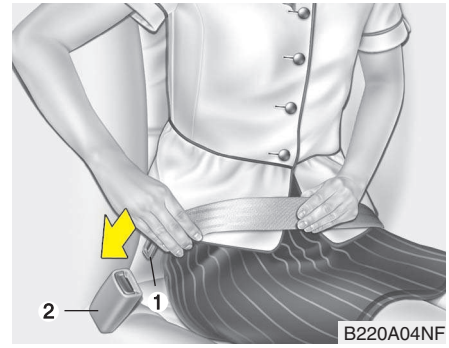

B220A04NF

C020103AUN

Lap belt (if equipped)

To fasten your seat belt:

To fasten a 2-point static type belt, insert the metal tab into the buckle. There will be an audible "click" when the tab locks into the buckle. Check to make sure the belt is properly locked and that the belt is not twisted.

FarmaSOS.com

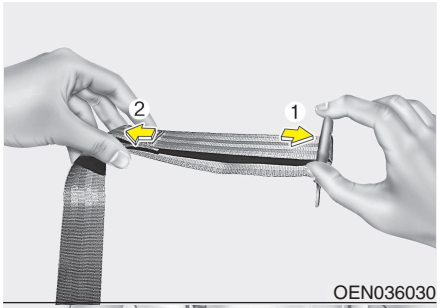

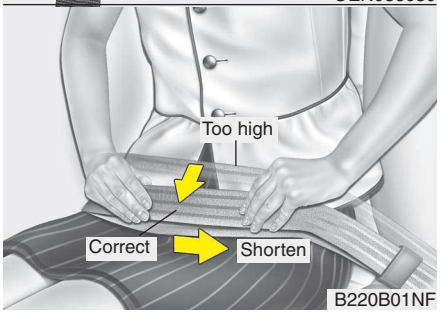

With a 2-point static type seat belt, the length must be adjusted manually so it fits snugly around your body. Fasten the belt and pull on the loose end to tighten. The belt should be placed as low as possible on your hips, not on your waist. If the belt is too high, it could increase the possibility of injury in an accident.

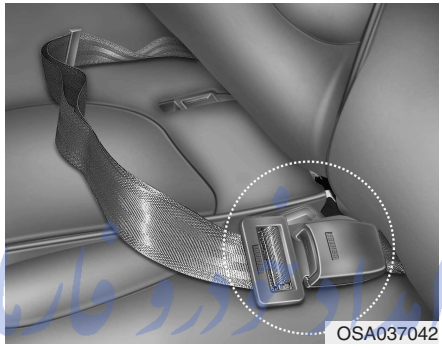

When using the rear center seat belt, the buckle with the “CENTER” mark must be used (if equipped).

تلفن شبانه روزی: ۰۲۱-۸۸۸۶۲۰۸۵
FarmaSOS.com

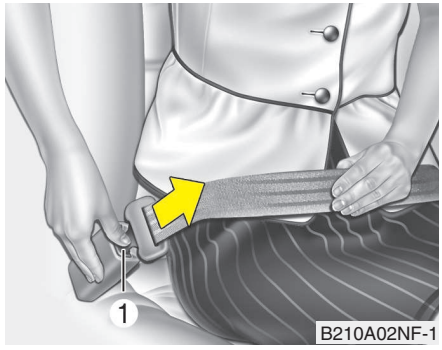

To release the seat belt:

When you want to release the seat belt, press the button (1) of the buckle.

⚠ WARNING

The center lap belt latching mechanism is different from those for the rear seat shoulder belts. When fastening the rear seat shoulder belts or the center lap belt, make sure they are inserted into the correct buckles to obtain maximum protection from the seat belt system and assure proper operation.

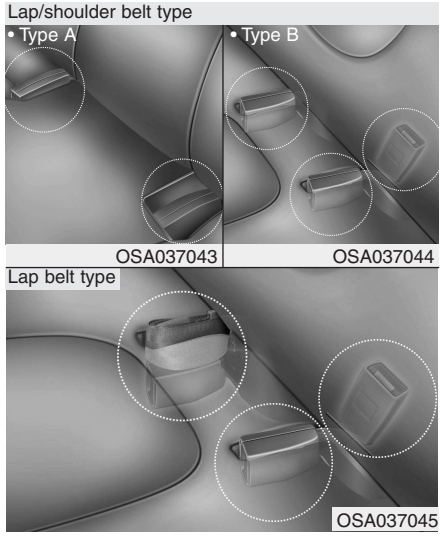

C020105APA

Stowing the rear seat belt (if equipped)

- The rear seat belt buckles can be stowed in the pocket between the rear seatback and cushion when not in use.
- The center seat belt can be stowed with the plate and webbing rolled in the pocket between the rear seatback and cushion.



C020200APA

Pre-tensioner seat belt (if equipped)

Your vehicle is equipped with driver's and front passenger's pre-tensioner seat belts. The purpose of the pre-tensioner is to make sure that the seat belts fit tightly against the occupant's body in certain frontal collisions. The pre-tensioner seat belts may be activated in crashes where the frontal collision is severe enough.

When the vehicle stops suddenly, or if the occupant tries to lean forward too quickly, the seat belt retractor will lock into position. In certain frontal collisions, the pre-tensioner will activate and pull the seat belt into tighter contact against the occupant's body.

If the system senses excessive seat belt tension on the driver or passenger's seat belt when the pre-tensioner activates, the load limiter inside the pre-tensioner will release some of the pressure on the affected seat belt (if equipped).

ایماد خودرو فارما

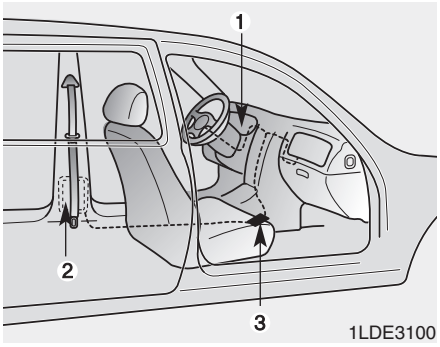

The seat belt pre-tensioner system consists mainly of the following components. Their locations are shown in the illustration:

1. SRS air bag warning light
2. Retractor pre-tensioner assembly
3. SRS control module

⚠ WARNING

To obtain maximum benefit from a pre-tensioner seat belt:

1. **The seat belt must be worn correctly and adjusted to the proper position. Please read and follow all of the important information and precautions about your vehicle's occupant safety features – including seat belts and air bags – that are provided in this manual.**
2. **Be sure you and your passengers always wear seat belts properly.**

تلفن شبانه روزی: ۰۸۵-۸۸۶۲۰۲۱

FarmaSOS.com

✻ NOTICE

- **Both the driver's and front passenger's pre-tensioner seat belts may be activated in certain frontal collisions.**
- **When the pre-tensioner seat belts are activated, a loud noise may be heard and fine dust, which may appear to be smoke, may be visible in the passenger compartment. These are normal operating conditions and are not hazardous.**
- **Although it is harmless, the fine dust may cause skin irritation and should not be breathed for prolonged periods. Wash all exposed skin areas thoroughly after an accident in which the pre-tensioner seat belts were activated.**

✻ NOTICE

Because the sensor that activates the SRS air bag is connected with the pre-tensioner seat belt, the SRS air bag warning light on the instrument panel will illuminate for approximately 6 seconds after the ignition switch has been turned to the ON position, and then it should turn off.

⚠ CAUTION

If the pre-tensioner seat belt is not working properly, this warning light will illuminate even if there is no malfunction of the SRS air bag. If the SRS air bag warning light does not illuminate when the ignition switch is turned ON, or if it remains illuminated after illuminating for approximately 6 seconds, or if it illuminates while the vehicle is being driven, please have an authorized KIA dealer inspect the pre-tensioner seat belt and SRS air bag system as soon as possible.

⚠ WARNING

- **Pre-tensioners are designed to operate only one time. After activation, pre-tensioner seat belts must be replaced. All seat belts, of any type, should always be replaced after they have been worn during a collision.**
- **The pre-tensioner seat belt assembly mechanisms become hot during activation. Do not touch the pre-tensioner seat belt assemblies for several minutes after they have been activated.**
- **Do not attempt to inspect or replace the pre-tensioner seat belts yourself. This must be done by an authorized KIA dealer.**
- **Do not strike the pre-tensioner seat belt assemblies.**
- **Do not attempt to service or repair the pre-tensioner seat belt system in any manner.**

(Continued)

(Continued)

- **Improper handling of the pre-tensioner seat belt assemblies, and failure to heed the warnings not to strike, modify, inspect, replace, service or repair the pre-tensioner seat belt assemblies may lead to improper operation or inadvertent activation and serious injury.**
- **Always wear the seat belts when driving or riding in a motor vehicle.**
- **If the vehicle or pre-tensioner seat belt must be discarded, contact an authorized KIA dealer.**

FarmaSUS.com

C020300AUN

Seat belt precautions

⚠ WARNING

All occupants of the vehicle must wear their seat belts at all times. Seat belts and child restraints reduce the risk of serious or fatal injuries for all occupants in the event of a collision or sudden stop. Without a seat belt, occupants could be shifted too close to a deploying air bag, strike the interior structure or be thrown from the vehicle. Properly worn seat belts greatly reduce these hazards.

Always follow the precautions about seat belts, air bags and occupant seating contained in this manual.

C020306AUN

Infant or small child

You should be aware of the specific requirements in your country. Child and/or infant seats must be properly placed and installed in the rear seat. For more information about the use of these restraints, refer to the “Child restraint system” in this section.

⚠ WARNING

Every person in your vehicle needs to be properly restrained at all times, including infants and children. Never hold a child in your arms or lap when riding in a vehicle. The violent forces created during a crash will tear the child from your arms and throw the child against the interior. Always use a child restraint appropriate for your child's height and weight.

✻ NOTICE

Small children are best protected from injury in an accident when properly restrained in the rear seat by a child restraint system that meets the requirements of the Safety Standards of your country. Before buying any child restraint system, make sure that it has a label certifying that it meets Safety Standards of your country. The restraint must be appropriate for your child's height and weight. Check the label on the child restraint for this information. Refer to “Child restraint system” in this section.

ایران خودرو
IranRSG.com

C020301ASA

Larger children

Children who are too large for child restraint systems should always occupy the rear seat and use the available lap/shoulder belts. The lap portion should be fastened on the hips and as low as possible. Check if the belt fits periodically. A child's squirming could put the belt out of position. Children are given the most safety in the event of an accident when they are restrained by a proper restraint system in the rear seat. If a larger child (over age 12) must be seated in the front seat, the child should be securely restrained by the available lap/shoulder belt and the seat should be placed in the rearmost position. Children age 12 and under should be restrained securely in the rear seat. NEVER place a child age 12 and under in the front seat. NEVER place a rear facing child seat in the front seat of a vehicle.

If the shoulder belt portion slightly touches the child's neck or face, try placing the child closer to the center of the vehicle. If the shoulder belt still touches their face or neck they need to be returned to a child restraint system.

⚠ WARNING - Shoulder belts on small children

- **Never allow a shoulder belt be in contact with a child's neck or face while the vehicle is in motion.**
- **If seat belts are not properly worn and adjusted on children, there is a risk of death or serious injury.**

تلفن شبانه روزی: ۰۲۱-۸۸۸۶۲۰۸۵

C020302AUN

Pregnant women

The use of a seat belt is recommended for pregnant women to lessen the chance of injury in an accident. When a seat belt is used, the lap belt portion should be placed as low and snugly as possible on the hips, not across the abdomen. For specific recommendations, consult a physician.

FarmaSOS.com

⚠ WARNING - Pregnant women

Pregnant women must never place the lap portion of the safety belt over the area of the abdomen where the fetus is located or above the abdomen where the belt could crush the fetus during an impact.

C020303AUN

Injured person

A seat belt should be used when an injured person is being transported. When this is necessary, you should consult a physician for recommendations.

C020304AUN

One person per belt

Two people (including children) should never attempt to use a single seat belt. This could increase the severity of injuries in case of an accident.

C020305APA

Do not lie down

To reduce the chance of injuries in the event of an accident and to achieve maximum effectiveness of the restraint system, all passengers should be sitting up and the front and rear seats should be in an upright position when the car is moving. A seat belt cannot provide proper protection if the person is lying down in the rear seat or if the front and rear seats are in a reclined position.

⚠ WARNING

Riding with a reclined seatback increases your chance of serious or fatal injuries in the event of a collision or sudden stop. The protection of your restraint system (seat belts and air bags) is greatly reduced by reclining your seat. Seat belts must be snug against your hips and chest to work properly. The more the seatback is reclined, the greater the chance that an occupant's hips will slide under the lap belt causing serious internal injuries or the occupant's neck could strike the shoulder belt. Drivers and passengers should always sit well back in their seats, properly belted, and with the seatbacks upright.

C020400AEN

Care of seat belts

Seat belt systems should never be disassembled or modified. In addition, care should be taken to assure that seat belts and belt hardware are not damaged by seat hinges, doors or other abuse.

⚠ WARNING

When you return the rear seatback to its upright position after the rear seatback has been folded down, be careful not to damage the seat belt webbing or buckle. Be sure that the webbing or buckle does not get caught or pinched in the rear seat. A seat belt with damaged webbing or buckle could possibly fail during a collision or sudden stop, resulting in serious injury. If the webbing or buckles are damaged, get them replaced immediately.

C020401AEN

Periodic inspection

All seat belts should be inspected periodically for wear or damage of any kind. Any damaged parts should be replaced as soon as possible.

C020402AUN

Keep belts clean and dry

Seat belts should be kept clean and dry. If belts become dirty, they can be cleaned by using a mild soap solution and warm water. Bleach, dye, strong detergents or abrasives should not be used because they may damage and weaken the fabric.

C020403ASA

When to replace seat belts

The entire in-use seat belt assembly or assemblies should be replaced if the vehicle has been involved in an accident. This should be done even if no damage is visible. Additional questions concerning seat belt operation should be directed by an authorized KIA dealer.

CHILD RESTRAINT SYSTEM (IF EQUIPPED)

C030000BEN

Children riding in the car should sit in the rear seat and must always be properly restrained to minimize the risk of injury in an accident, sudden stop or sudden maneuver. According to accident statistics, children are safer when properly restrained in the rear seats than in the front seat. Larger children not in a child restraint should use one of the seat belts provided.

You should be aware of the specific requirements in your country. Child and/or infant safety seats must be properly placed and installed in the rear seat. You must use a commercially available child restraint system that meets the requirements of the Safety Standards of your country.

Child restraint systems are designed to be secured in vehicle seats by lap belts or the lap belt portion of a lap/shoulder belt, or by a tether anchor and/or ISOFIX anchors (if equipped).

Children could be injured or killed in a crash if their restraints are not properly secured. For small children and babies, a child seat or infant seat must be used. Before buying a particular child restraint system, make sure it fits your car seat and seat belts, and fits your child.

Follow all the instructions provided by the manufacturer when installing the child restraint system.

⚠ WARNING

- **A child restraint system must be placed in the rear seat. Never install a child or infant seat on the front passenger's seat. Should an accident occur and cause the passenger-side air bag to deploy, it could severely injure or kill an infant or child seated in an infant or child seat. Thus only use a child restraint in the rear seat of your vehicle.**
- **A seat belt or child restraint system can become very hot if it is left in a closed vehicle on a sunny day, even if the outside temperature does not feel hot. Be sure to check the seat cover and buckles before placing a child there.**

(Continued)

(Continued)

- **When the child restraint system is not in use, store it in the luggage area or fasten it with a seat belt so that it will not be thrown forward in the case of a sudden stop or an accident.**
- **Children may be seriously injured or killed by an inflating air bag. All children, even those too large for child restraints, must ride in the rear seat.**

تلفن شبانه روزی: ۰۲۱-۷۷۶۲۰۸۵

⚠ WARNING

To reduce the chance of serious or fatal injuries:

- **Children of all ages are safer when restrained in the rear seat. A child riding in the front passenger seat can be forcefully struck by an inflating air bag resulting in serious or fatal injuries.**
- **Always follow the child restraint system manufacturer's instructions for installation and use of the child restraint.**
- **Always make sure the child seat is secured properly in the car and your child is securely restrained in the child seat.**
- **Never hold a child in your arms or lap when riding in a vehicle. The violent forces created during a crash will tear the child from your arms and throw the child against the car's interior.**
- **Never put a seat belt over yourself and a child. During a crash, the belt could press deep into the child causing serious internal injuries.**

(Continued)

(Continued)

- **Never leave children unattended in a vehicle – not even for a short time. The car can heat up very quickly, resulting in serious injuries to children inside. Even very young children may inadvertently cause the vehicle to move, entangle themselves in the windows, or lock themselves or others inside the vehicle.**
- **Never allow two children, or any two persons, to use the same seat belt.**
- **Children often squirm and reposition themselves improperly. Never let a child ride with the shoulder belt under their arm or behind their back. Always properly position and secure children in the rear seat.**
- **Never allow a child stand-up or kneel on the seat or floor of a moving vehicle. During a collision or sudden stop, the child can be violently thrown against the vehicle's interior, resulting in serious injury.**

(Continued)

(Continued)

- **Never use an infant carrier or a child safety seat that "hooks" over a seatback, it may not provide adequate security in an accident.**
- **Seat belts can become very hot, especially when the car is parked in direct sunlight. Always check seat belt buckles before fastening them over a child.**

FarsiSOS.com

Rearward-facing child restraint system

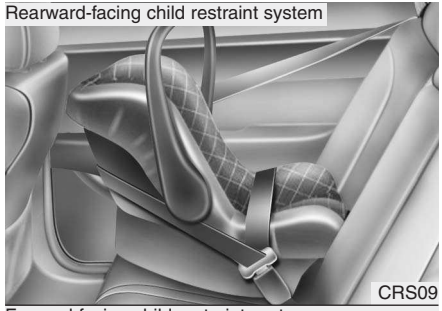

Forward-facing child restraint system



C030100AEN

Using a child restraint system

For small children and babies, the use of a child seat or infant seat is required. This child seat or infant seat should be of appropriate size for the child and should be installed in accordance with the manufacturer's instructions.

For safety reasons, we recommend that the child restraint system be used in the rear seats.

⚠ WARNING

Never place a rear-facing child restraint in the front passenger seat, because of the danger that an inflating passenger-side air bag could impact the rear-facing child restraint and kill the child.

امداد خودرو
تلفن شبانه روزی: ۰۲۱-۸۸۸۶۲۰۸۵
FarmaSOS.com

⚠ WARNING - Child seat installation

- **A child can be seriously injured or killed in a collision if the child restraint is not properly anchored to the car and the child is not properly restrained in the child restraint. Before installing the child restraint system, read the instructions supplied by the child restraint system manufacturer.**
- **If the seat belt does not operate as described in this section, have the system checked immediately by your authorized KIA dealer.**
- **Failure to observe this manual's instructions regarding child restraint systems and the instructions provided with the child restraint system could increase the chance and/or severity of injury in an accident.**

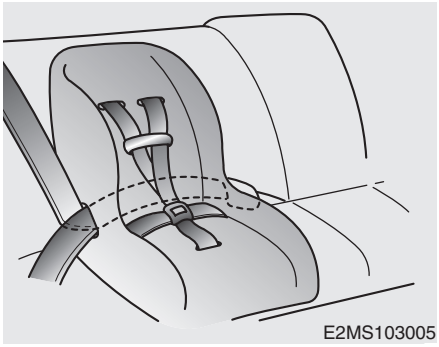
E2MS103005

C030102AUN

Installing a child restraint system by lap/shoulder belt

To install a child restraint system on the outboard or center rear seats, do the following:

1. Place the child restraint system in the seat and route the lap/shoulder belt around or through the restraint, following the restraint manufacturer's instructions. Be sure the seat belt webbing is not twisted.

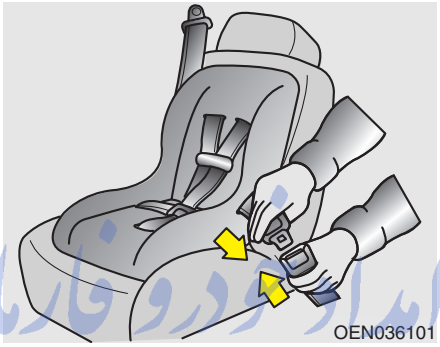
OEN036101

2. Fasten the lap/shoulder belt latch into the buckle. Listen for the distinct "click" sound.

Position the release button so that it is easy to access in case of an emergency.

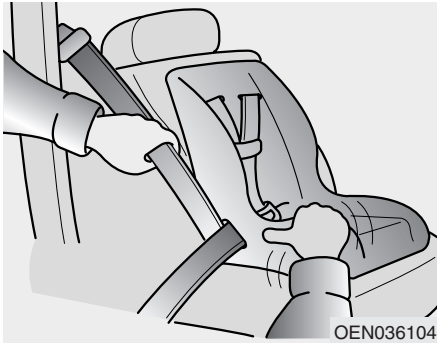
OEN036104

3. Buckle the seat belt and allow the seat belt to take up any slack. After installation of the child restraint system, try to move it in all directions to be sure the child restraint system is securely installed.

FarmaSOS.com

If you need to tighten the belt, pull more webbing toward the retractor. When you unbuckle the seat belt and allow it to retract, the retractor will automatically revert back to its normal seated passenger emergency locking usage condition.



C030101AUN

Installing a child restraint system by lap belt (on the center rear seat) (if equipped) - Except Europe

To install a child restraint system on the center rear seats, do the following:

1. Place the child restraint system on the center rear seat.
2. Extend the latch plate tongue of the lap belt.
3. Route the lap belt through the restraint according to the seat manufacturer's instructions.
4. Buckle the seat belt and adjust the lap belt for a snug hold on the child restraint by pulling on the loose end of the belt. After installation of the child restraint system, try to move it in all directions to be sure the child restraint system is securely installed.

FarmaSOS.com

C030105ASA

Child seat restraint suitability for seat position using the seat belt - For Europe

Use child safety seats that have been officially approved and are appropriate for your children. When using the child safety seats, refer to the following table.

Age group	Seating position		
	Front passenger	Rear outboard	Rear center
0 : Up to 10 kg (0 - 9 months)	L1, L2, L3, L4	U	U
0+ : Up to 13 kg (0 - 2 years)	L1, L2 L3, L4	U	U
I : 9 kg to 18 kg (9 months - 4 years)	L3, L5 L7, L8	U, L10	U
II & III : 15 kg to 36 kg (4 - 12 years)	L9	UF	UF

L1 : Suitable for Bebe comfort ELIOS (E2 037014) approved for the use in this mass group

L2 : Suitable for PegPerego primo Viaggio (E13 030010) approved for the use in this mass group

L3 : Suitable for Bebe comfort iSEOS (E2 039014) approved for the use in this mass group

L4 : Suitable for GRACO Autobaby (E11 03.44.160 / E11 03.44.161) approved for the use in this mass group

L5 : Suitable for Romer Lord Plus (E1 03301136) approved for the use in this mass group

L7 : Suitable for BeSafe iZi COMFORT (E4 03443206) approved for the use in this mass group

L8 : Suitable for MAXI-COSI Priori XP (E1 03301153) approved for the use in this mass group

L9 : Suitable for Bebe comfort HiPSOS(E2 031011/E2 031017) approved for the use in this mass group

L10 : Suitable for "Römer ISOFIX GR1" approved for use in this age group (Approval No:E1 R44-03301133)

U : Suitable for "universal" category restraints approved for use in this mass group

UF : Suitable for forward-facing "universal" category restraints approved for the use in this mass group

⚠ WARNING

We recommend that a child restraint seat be installed in the rear seat, even if the front passenger's air bag ON/OFF switch is set to the OFF position. To ensure the safety of your child, the front passenger's air bag must be deactivated when it should be necessary to install a child restraint seat on the front passenger seat in exceptional circumstances.

امداد خودرو فارما
تلفن شبانه روزی: ۰۲۱۰۸۸۶۲۰۸۵
FarmaSOS.com

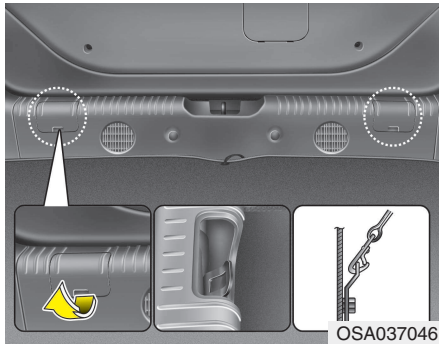

C030103ASA

Securing a child restraint seat with "Tether Anchor" system (if equipped)

Child restraint hook holders are located on the tranverse trim behind the rear seats.



1. Route the child restraint seat strap over the seatback.
   For vehicles with adjustable headrest, route the tether strap under the headrest and between the headrest posts, otherwise route the tether strap over the top of the seatback.
2. Connect the tether strap hook to the appropriate child restraint hook holder and tighten to secure the seat.

⚠ WARNING

A child can be seriously injured or killed in a collision if the child restraint is not properly anchored to the car and the child is not properly restrained in the child restraint. Always follow the child seat manufacturer's instructions for installation and use.

⚠ WARNING - Tether strap

Never mount more than one child restraint to a single tether or to a single lower anchorage point. The increased load caused by multiple seats may cause the tethers or anchorage points to break, causing serious injury or death.

Farmasos.com

⚠ WARNING - Child restraint check

Check that the child restraint system is secure by pushing and pulling it in different directions. Incorrectly fitted child restraints may swing, twist, tip or separate causing death or serious injury.

⚠ WARNING - Child restraint anchorage

- **Child restraint anchorages are designed to withstand only those loads imposed by correctly fitted child restraints. Under no circumstances are they to be used for adult seat belts or harnesses or for attaching other items or equipment to the vehicle.**
- **The tether strap may not work properly if attached somewhere other than the correct tether anchor.**

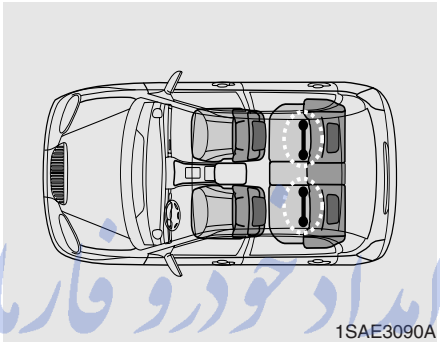
1SAE3090A

C030104ASA

Securing a child restraint system with "ISOFIX" system and "Tether Anchorage" system (if equipped)

ISOFIX is a standardized method of fitting child seats that eliminates the need to use the standard adult seat belt to secure the seat in the vehicle. This enables a much more secure and positive location with the added benefit of easier and quicker installation.

An ISOFIX-seat can only be installed if it has vehicle-specific approval in accordance with the requirements of ECE-R44.

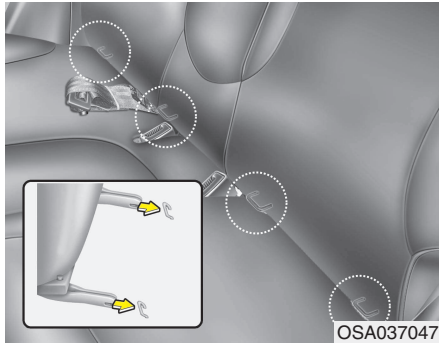
OSA037047

On each side of the rear seat, between the cushion and backrest, are located a pair of ISOFIX anchorage points together with a top tether mounting on the tranverse trim behind the rear seats. During the installation, the seat has to be engaged at the anchorage-points in a way you can hear it clicking (check by pulling!) and has to be fixed with the Top Tether-belt on the belonging point on the floor behind the rear seats.

امداد خودرو فارما
تلفن شبانه روزی ۸۸۸۶۴۸۵۱
FarmaSOS.com

The installing and the use of a child-seat has to be done according to the installing-manual, which is added to the ISOFIX-seat.

⚠ WARNING

When using the vehicle's "ISOFIX" system to install a child restraint system in the rear seat, all unused vehicle rear seat belt metal latch plates or tabs must be latched securely in their seat belt buckles and the seat belt webbing must be retracted behind the child restraint to prevent the child from reaching and taking hold of unretracted seat belts. Unlatched metal latch plates or tabs may allow the child to reach the unretracted seat belts which may result in strangulation and serious injury or death to the child in the child restraint.

To secure the child restraint seat:

1. To engage the child restraint seat to the ISOFIX anchor, insert the child restraint seat latch into the ISOFIX anchor. Listen for the audible “click” sound.

⚠ CAUTION

Do not allow the rear seat belt webbing to get scratched or pinched by the ISOFIX-seat latch and ISOFIX anchor during the installation.

2. Connect the tether strap hook to the child restraint hook holder and tighten to secure the seat. (Refer to the previous page.)

⚠ WARNING

- **Do not install a child restraint seat at the center of the rear seat using the vehicle's ISOFIX anchors. The ISOFIX anchors are only provided for the left and right outboard rear seating positions.**

(Continued)

(Continued)

Do not misuse the ISOFIX anchors by attempting to attach a child restraint seat in the middle of the rear seat to the ISOFIX anchors.

In a crash, the child restraint seat ISOFIX attachments may not be strong enough to secure the child restraint seat properly in the center of the rear seat and may break, causing serious injury or death.

- **Do not mount more than one child restraint to a child restraint lower anchorage point. The improper increased load may cause the anchorage points or tether anchor to break, causing serious injury or death.**
- **Attach the ISOFIX or ISOFIX-compatible child restraint seat only to the appropriate locations shown in the illustration.**
- **Always follow the installation and use instructions provided by the manufacturer of the child restraint.**

C030106ASA

Child seat restraint suitability for vehicle ISOFIX positions - For Europe

Mass Group	Size Class	Fixture	vehicle ISOFIX positions			
			Front Passenger	Rear Outboard (Driver side)	Rear Outboard (Passenger side)	Rear Center
Carrycot	F	ISO/L1	-	X	X	-
	G	ISO/L2	-	X	X	-
0 : UP to 10kg	E	ISO/R1	-	X	IUF	-
0+ : UP to 13kg	E	ISO/R1	-	X	IUF	-
	D	ISO/R2	-	X	IUF	-
	C	ISO/R3	-	X	IUF	-
I : 9 to 18kg	D	ISO/R2	-	X	IUF	-
	C	ISO/R3	-	X	IUF	-
	B	ISO/F2	-	IUF	IUF	-
	B1	ISO/F2X	-	IUF	IUF	-
	A	ISO/F3	-	IUF	IUF	-

امداد خودرو فارما
تلفن شبانه روزی: ۸۸۸۶۲۰۸۵-۲۱
FarmaSOS.com

IUF = Suitable for ISOFIX forward child restraints systems of universal category approved for use in the mass group.

X = ISOFIX position not suitable for ISOFIX child restraint system in this mass group and/or this size class.

* For the position of ISO/R1, ISO/R2 and ISO/R3, the front passenger seat cannot be used.
* ISOFIX child restraint system size classes and fixtures

A - ISO/F3: Full-Height Forward-Facing toddler CRS (height 720mm)

B - ISO/F2: Reduced-Height Forward-Facing toddler CRS (height 650mm)

B1 - ISO/F2X: Reduced-Height Second Version Back Surface Shape Forward-Facing toddler CRS (height 650mm)

C - ISO/R3: Full-Size Rearward-Facing toddler CRS

D - ISO/R2: Reduced-Size Rearward-Facing toddler CRS

E - ISO/R1: Infant-Size Rearward-Facing CRS

F - ISO/L1: Left Lateral Facing position CRS (carry-cot)

G - ISO/L2: Right Lateral Facing position CRS (carry-cot)

AIR BAG - SUPPLEMENTAL RESTRAINT SYSTEM (IF EQUIPPED)

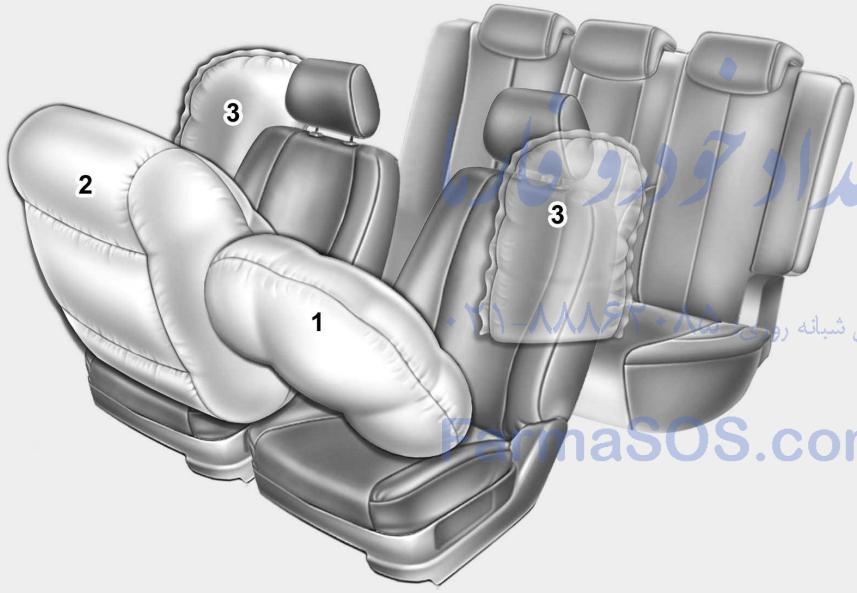

* The actual air bags in the vehicle may differ from the illustration.

OSA037099

C040000APA

(1) Driver's front air bag*
(2) Passenger's front air bag*
(3) Side impact air bag*
* : if equipped

⚠ WARNING

Even in vehicles with air bags, you and your passengers must always wear the safety belts provided in order to minimize the risk and severity of injury in the event of a collision or rollover.

امداد خودرو
تلفن شبانه روزی ۰۲۱-۸۸۸۶۳۰۰۰
FarmaSOS.com

C040900APA

How does the air bag system operate

- Air bags are activated (able to inflate if necessary) only when the ignition switch is turned to the ON or START position.
- Air bags inflate instantly in the event of a serious frontal or side collision (if equipped with side impact air bag) in order to help protect the occupants from serious physical injury.
- There is no single speed at which the air bags will inflate.

  Generally, air bags are designed to inflate based upon the severity of a collision and its direction. These two factors determine whether the sensors produce an electronic deployment/ inflation signal.
- Air bag deployment depends on a number of factors including vehicle speed, angles of impact and the density and stiffness of the vehicles or objects which your vehicle hits in the collision. The determining factors are not limited to those mentioned above.
- The front air bags will completely inflate and deflate in an instant.

  It is virtually impossible for you to see the air bags inflate during an accident. It is much more likely that you will simply see the deflated air bags hanging out of their storage compartments after the collision.
- In order to help provide protection in a severe collision, the air bags must inflate rapidly. The speed of air bag inflation is a consequence of the extremely short time in which a collision occurs and the need to inflate the air bag between the occupant and the vehicle structures before the occupant impacts those structures. This speed of inflation reduces the risk of serious or life-threatening injuries in a severe collision and is thus a necessary part of air bag design.

  However, air bag inflation can also cause injuries which can include facial abrasions, bruises and broken bones because the inflation speed also causes the air bags to expand with a great deal of force.
- **There are even circumstances under which contact with the steering wheel air bag can cause fatal injuries, especially if the occupant is positioned excessively close to the steering wheel.**

⚠ WARNING

- **To avoid severe personal injury or death caused by deploying air bags in a collision, the driver should sit as far back from the steering wheel air bag as possible (at least 250 mm (10 inches) away). The front passengers should always move their seats as far back as possible and sit back in their seat.**
- **Air bags inflate instantly in the event of collision, and passengers may be injured by the air bag expansion force if they are not in proper position.**
- **Air bag inflation may cause injuries including facial or bodily abrasions, injuries from broken glasses or burns.**

FarnaSOS.com

C040902AEN

Noise and smoke

When the air bags inflate, they make a loud noise and they leave smoke and powder in the air inside of the vehicle. This is normal and is a result of the ignition of the air bag inflator. After the air bag inflates, you may feel substantial discomfort in breathing due to the contact of your chest with both the seat belt and the air bag, as well as from breathing the smoke and powder. **Open your doors and/or windows as soon as possible after impact in order to reduce discomfort and prevent prolonged exposure to the smoke and powder.**

Though the smoke and powder are non-toxic, they may cause irritation to the skin (eyes, nose and throat, etc). If this is the case, wash and rinse with cold water immediately and consult a doctor if the symptom persists.

⚠ WARNING

When the air bags deploy, the air bag related parts in the steering wheel and/or instrument panel and/or in both sides of the roof rails above the front and rear doors are very hot. To prevent injury, do not touch the air bag storage area's internal components immediately after an air bag has inflated.

امداد خودرو فارما
تلفن شبانه روزی: ۰۲۱-۸۸۸۶۲۰۸۵
FarmaSOS.com



C040903ASA

Do not install a child restraint on the front passenger's seat.

Never place a rear-facing child restraint in the front passenger's seat. If the air bag deploys, it would impact the rear-facing child restraint, causing serious or fatal injury.

In addition, do not place front-facing child restraints in the front passenger's seat either. If the front passenger air bag inflates, it could cause serious or fatal injuries to the child.

⚠ WARNING

- **Extreme Hazard! Do not use a rearward facing child restraint on a seat protected by an air bag in front of it!**
- **Never put a child restraint in the front passenger's seat. If the front passenger air bag inflates, it can cause serious or fatal injuries.**
- **When children are seated in the rear outboard seats of a vehicle, be sure to install the child restraint system securely in position.**



W7-147

C041000AEN

Air bag warning light

The purpose of the air bag warning light in your instrument panel is to alert you of a potential problem with your air bag - Supplemental Restraint System (SRS).

When the ignition switch is turned ON, the warning light should illuminate for approximately 6 seconds, then go off.

Have the system checked if:

- The light does not turn on briefly when you turn the ignition ON.
- The light stays on after illuminating for approximately 6 seconds.
- The light comes on while the vehicle is in motion.

FarmaSOS.com

C040100ASA

SRS components and functions

The SRS consists of the following components:

1. Driver's front air bag module
2. Passenger's front air bag module*
3. Side air bag modules*
4. Retractor pre-tensioner assemblies*
5. Air bag warning light
6. SRS control module (SRSCM)
7. Side impact sensors*
8. Passenger's front air bag OFF indicator (front passenger's seat only)*
9. Passenger's front air bag ON/OFF switch*

*: if equipped

The SRSCM continually monitors all SRS components while the ignition switch is ON to determine if a crash impact is severe enough to require air bag deployment or pre-tensioner seat belt deployment.

The SRS air bag warning light on the instrument panel will illuminate for about 6 seconds after the ignition switch is turned to the ON position, after which the SRS air bag warning light should go out.

⚠ WARNING

If any of the following conditions occurs, this indicates a malfunction of the SRS. Have an authorized KIA dealer inspect the air bag system as soon as possible.

- **The light does not turn on briefly when you turn the ignition ON.**
- **The light stays on after illuminating for approximately 6 seconds.**
- **The light comes on while the vehicle is in motion.**

Driver's front air bag (1)



B240B01L

The front air bag modules are located both in the center of the steering wheel and in the front passenger's panel above the glove box. When the SRSCM detects a sufficiently severe impact to the front of the vehicle, it will automatically deploy the front air bags.

Driver's front air bag (2)

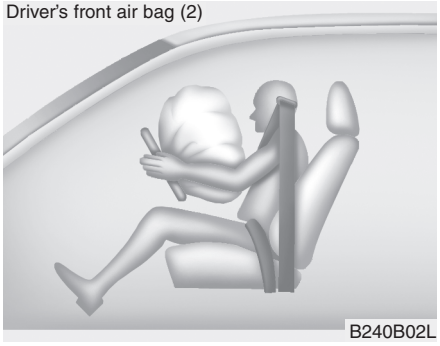

Upon deployment, tear seams molded directly into the pad covers will separate under pressure from the expansion of the air bags. Further opening of the covers then allows full inflation of the air bags.

Driver's front air bag (3)

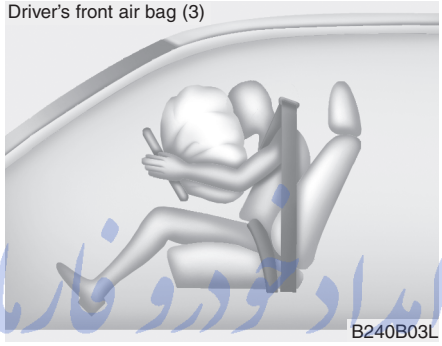

A fully inflated air bag, in combination with a properly worn seat belt, slows the driver's or the passenger's forward motion, reducing the risk of head and chest injury.

After complete inflation, the air bag immediately starts deflating, enabling the driver to maintain forward visibility and the ability to steer or operate other controls.

Passenger's front air bag

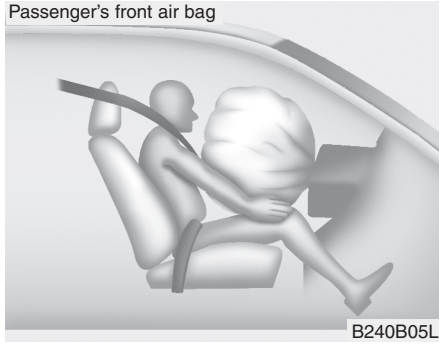

⚠ WARNING

- **Do not install or place any accessories (drink holder, cassette holder, sticker, etc.) on the front passenger's panel above the glove box in a vehicle with a passenger's air bag. Such objects may become dangerous projectiles and cause injury if the passenger's air bag inflates.**
- **When installing a container of liquid air freshener inside the vehicle, do not place it near the instrument cluster nor on the instrument panel surface.**

  It may become a dangerous projectile and cause injury if the passenger's air bag inflates.

امداد خودرو فارما
تلفن شبانه روزی: ۰۲۱۸۸۸۶۲۰۸۵
FarmaSOS.com

⚠ WARNING

- **If an air bag deploys, there may be a loud noise followed by a fine dust released in the vehicle. These conditions are normal and are not hazardous - the air bags are packed in this fine powder. The dust generated during air bag deployment may cause skin or eye irritation as well as aggravate asthma for some persons. Always wash all exposed skin areas thoroughly with lukewarm water and a mild soap after an accident in which the air bags were deployed.**
- **The SRS can function only when the ignition switch is in the ON position.**

(Continued)

(Continued)

- **Before you replace a fuse or disconnect a battery terminal, turn the ignition switch to the LOCK position and remove the ignition key. Never remove or replace the air bag related fuse(s) when the ignition switch is in the ON position. Failure to heed this warning will cause the SRS air bag warning light to illuminate.**

امداد خودرو ۰۲۱-۸۸۸۶۲۰۸۵ تلفن شبانه روزی:
FarmaSOS.com

Driver's front air bag



OSA030101

Passenger's front air bag

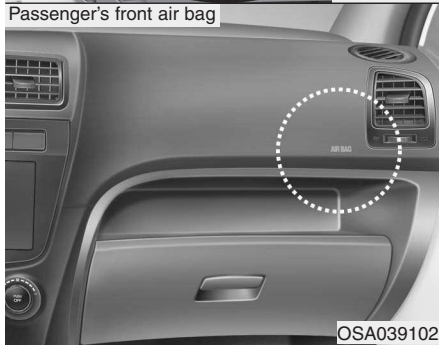

OSA039102

C040400ASA

Driver's and passenger's front air bag (if equipped)

Your vehicle is equipped with a Supplemental Restraint (Airbag) System and lap/shoulder belts at both the driver and passenger seating position. The indications of the system's presence are the letters "SRS AIR BAG" or “AIR BAG” embossed on the air bag pad cover in the steering wheel and the passenger's side front panel pad above the glove box.

The SRS consists of air bags installed under the pad covers in the center of the steering wheel and the passenger's side front panel above the glove box.

The purpose of the SRS is to provide the vehicle's driver and/or the front passenger with additional protection than that offered by the seat belt system alone in case of a frontal impact of sufficient severity.

⚠ WARNING

Always use seat belts and child restraints – every trip, every time, everyone! Air bags inflate with considerable force and in the blink of an eye. Seat belts help keep occupants in proper position to obtain maximum benefit from the air bag. Even with air bags, improperly and unbelted occupants can be severely injured when the air bag inflates. Always follow the precautions about seat belts, air bags and occupant safety contained in this manual.

(Continued)

۰۲۱-۸۸۸۶۲۰۸۵ تلفن شبانه روزی
FarmaSOS.com

(Continued)

To reduce the chance of serious or fatal injuries and receive the maximum safety benefit from your restraint system:

- **Never place a child in any child or booster seat in the front seat.**
- **ABC – Always Buckle Children in the back seat. It is the safest place for children of any age to ride.**
- **Front and side air bags can injure occupants improperly positioned in the front seats.**
- **Move your seat as far back as practical from the front air bags, while still maintaining control of the vehicle.**
- **You and your passengers should never sit or lean unnecessarily close to the air bags. Improperly positioned drivers and passengers can be severely injured by inflating air bags.**
- **Never lean against the door or center console – always sit in an upright position.**

(Continued)

(Continued)
- Do not allow a passenger to ride in the front seat when the passenger's front air bag OFF indicator is illuminated, because the air bag will not deploy in the event of a moderate or severe frontal crash. (if equipped)
- No objects should be placed over or near the air bag modules on the steering wheel, instrument panel, and the front passenger's panel above the glove box, because any such object could cause harm if the vehicle is in a crash severe enough to cause the air bags to deploy.
- Do not tamper with or disconnect SRS wiring or other components of the SRS system. Doing so could result in injury, due to accidental deployment of the air bags or by rendering the SRS inoperative.
- If the SRS air bag warning light remains illuminated or blinks while the vehicle is being driven, have an authorized KIA dealer inspect the air bag system as soon as possible.

(Continued)

(Continued)
- Air bags can only be used once – have an authorized KIA dealer replace the air bag immediately after deployment.
- The SRS is designed to deploy the front air bags only when an impact is sufficiently severe and when the impact angle is less than 30° from the forward longitudinal axis of the vehicle. Additionally, the air bags will only deploy once. Seat belts must be worn at all times.
- Front air bags are not intended to deploy in side-impact, rear-impact or rollover crashes. In addition, front air bags will not deploy in frontal crashes below the deployment threshold.

(Continued)

(Continued)
- A child restraint system must never be placed in the front seat. The infant or child could be severely injured or killed by an air bag deployment in case of an accident.
- Children age 12 and under must always be properly restrained in the rear seat. Never allow children to ride in the front passenger seat. If a child over 12 must be seated in the front seat, he or she must be properly belted and the seat should be moved as far back as possible.
- For maximum safety protection in all types of crashes, all occupants including the driver should always wear their seat belts whether or not an air bag is also provided at their seating position to minimize the risk of severe injury or death in the event of a crash. Do not sit or lean unnecessarily close to the air bag while the vehicle is in motion.

(Continued)

FarmaSOS.com

(Continued)

- **Sitting improperly or out of position can result in serious or fatal injury in a crash. All occupants should sit upright with the seat back in an upright position, centered on the seat cushion with their seat belt on, legs comfortably extended and their feet on the floor until the vehicle is parked and the ignition key is removed.**
- **The SRS air bag system must deploy very rapidly to provide protection in a crash. If an occupant is out of position because of not wearing a seat belt, the air bag may forcefully contact the occupant causing serious or fatal injuries.**



OSA037106

C040501ASA

Passenger's front air bag ON/OFF switch (if equipped)

The passenger's front air bag can be deactivated by the passenger's front air bag ON/OFF switch if a child restraint is installed on the front passenger's seat or if the front passenger's seat is unoccupied by a person.

To ensure the safety of your child, the passenger's front air bag must be deactivated when it is necessary to install a rearward facing child seat on the front passenger seat in exceptional circumstances.

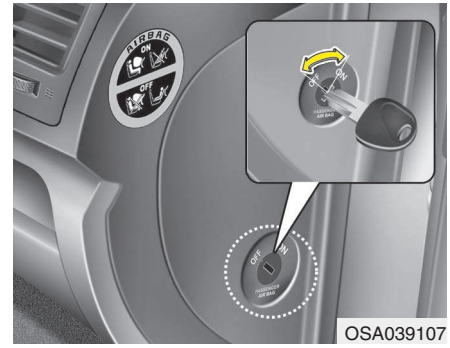

OSA039107

To deactivate or reactivate the passenger's front air bag:

To deactivate the passenger's front air bag, insert the master key into the passenger's front air bag ON/OFF switch and turn it to the OFF position. The passenger's front air bag OFF indicator will illuminate and stay on until the passenger's front air bag is reactivated.

To reactivate the passenger's front air bag, insert the master key into the passenger's front air bag ON/OFF switch and turn it to the ON position. The passenger's front air bag OFF indicator will go out.

FarhaSOS.com

⚠ WARNING

The front air bag ON/OFF switch could turn by using a similar small rigid device. Always check the status of the front air bag ON/OFF switch and passenger's front air bag OFF indicator.

✻ NOTICE

- When the passenger's front air bag ON/OFF switch is set to the ON position, the passenger's front air bag is activated and child or infant seat should not be installed on the front passenger seat.
- When the passenger's front air bag ON/OFF switch is set to the OFF position, the passenger's front air bag is deactivated.

⚠ CAUTION

- *If the passenger's front air bag ON/OFF switch does not work properly, the air bag warning light on the instrument panel will illuminate.*
  And, the passenger's front air bag OFF indicator will not illuminate, the SRS Control Module reactivates the passenger's front air bag and the passenger's front air bag will inflate in frontal impact crashes even if the passenger's front air bag ON/OFF switch is set to the OFF position.

(Continued)

(Continued)

If this occurs, have an authorized KIA dealer inspect the passenger's front air bag ON/OFF switch, the pre-tensioner seat belt system and the SRS air bag system as soon as possible.

- *If the SRS air bag warning light does not illuminate when the ignition switch is turned to the ON position, or if it illuminates while the vehicle is being driven, have an authorized KIA dealer inspect the passenger's front air bag ON/OFF switch, pre-tensioner seat belt and the SRS air bag system as soon as possible.*

امداد خودرو فارما
تلفن ۰۲۱-۸۸۸۶۲۰۸۵
FarmaSOS.com

⚠ WARNING

- **The driver is responsible for the proper position of the passenger's front air bag ON/OFF switch.**
- **Deactivate the passenger's front air bag only when the ignition switch is switched off, or the malfunction may occur in the SRS Control Module.**
  And there may be a danger that the driver's and/or front passenger's and/or side and curtain air bag may fail to trigger, or not trigger correctly during a collision.
- **Never install a rearward facing child seat on the front passenger's seat unless the passenger's front air bag has been deactivated. The infant or child could be severely injured or killed by an air bag deployment in case of an accident.**

(Continued)

(Continued)

- **Even though your vehicle is equipped with the passenger's front air bag ON/OFF switch, do not install a child restraint system in the front passenger's seat. A child restraint system must never be placed in the front seat. Children who are too large for child restraint systems should always occupy the rear seat and use the available lap/shoulder belts. Children are given the most safety in the event of an accident when they are restrained by a proper restraint system in the rear seat.**
- **As soon as the child seat is no longer needed on the front passenger's seat, reactivate the front passenger's air bag.**

⚠ WARNING

- **The passenger's front air bag is much larger than the steering wheel air bag and inflates with considerably more force. It can seriously hurt or kill a passenger who is not in the proper position and wearing the seat belt properly. The front passengers should always move their seat as far back as practical and sit back in their seat.**
- **It is essential that the front passengers always wear their seat belts when vehicle is in motion, even when the vehicle is moving in a parking lot or up a driveway into a garage.**

(Continued)

FarnasOS.com

(Continued)

- **If a driver brakes the vehicle heavily in an urgent situations, occupants will be thrown forward. If front passengers are not wearing the seat belts, they will be directly in front of the air bags when inflation occurs. In that situation, severe injury or death is possible.**
- **Never allow a front passenger put their hands or feet on the instrument panel or put their face close to the instrument panel. The air bag will impact the front passenger when it inflates.**

(Continued)

(Continued)

- **Never allow children/elder and feeble persons/pregnant women sit on the front passenger's seat. Do not put a child restraint system on the front passenger's seat either. They may be seriously injured by the air bag inflation when the air bag deploys.**
- **Do not put objects or stickers on the instrument panel. Do not apply any accessory on the front windshield glass or do not install aftermarket mirrors or accessories on the factory installed rearview mirror. These may interfere with the deployment of air bag inflation or could hit your body at high speed and cause severe bodily injury and even death.**

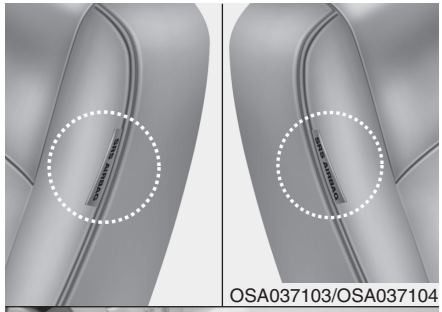

OSA037103/OSA037104

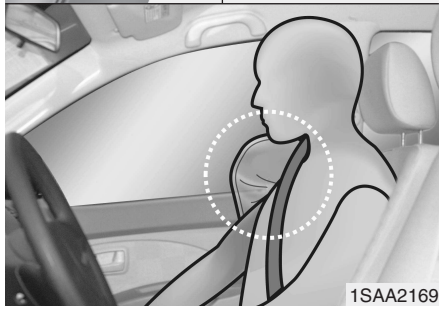

C040600ASA

Side impact air bag (if equipped)

Your vehicle is equipped with a side impact air bag in each front seat. The purpose of the air bag is to provide the vehicle's driver and/or the front passenger with additional protection than that offered by the seat belt alone.

FarmaSOS.com

The side impact air bags are designed to deploy only during certain side-impact collisions, depending on the crash severity, angle, speed and point of impact. The side impact air bags are not designed to deploy in all side impact situations.

⚠ WARNING

- **The side impact air bag is supplemental to the driver's and the passenger's seat belt systems and is not a substitute for them. Therefore your seat belts must be worn at all times while the vehicle is in motion. The air bags deploy only in certain side impact conditions severe enough to cause significant injury to the vehicle occupants.**
- **For best protection from the side impact air bag system and to avoid being injured by the deploying side impact air bag, both front seat occupants should sit in an upright position with the seat belt properly fastened. The driver's hands should be placed on the steering wheel at the 9:00 and 3:00 positions. The passenger's arms and hands should be placed on their laps.**

(Continued)

(Continued)

- **Do not use any accessory seat covers.**
- **Use of seat covers could reduce or prevent the effectiveness of the system.**
- **Do not install any accessories on the side or near the side impact air bag.**
- **Do not place any objects over the air bag or between the air bag and yourself.**
- **Do not place any objects (an umbrella, bag, etc.) between the front door and the front seat. Such objects may become dangerous projectiles and cause injury if the supplemental side impact air bag inflates.**
- **To prevent unexpected deployment of the side impact air bag that may result in personal injury, avoid impact to the side impact sensor when the ignition switch is on.**
- **If the seat or seat cover is damaged, have the vehicle checked and repaired by an authorized KIA dealer because your vehicle is equipped with side impact air bags.**

⚠ WARNING

- **In order for side air bags to provide the best protection, both front seat occupants should sit in an upright position with the seat belts properly fastened. Importantly, children should sit in a proper child restraint system in the rear seat.**
- **When a child is seated in the front passenger's seat, the child must be seated in the proper child restraint system. Make sure to position the child restraint system as far away from the door side as possible, and secure the child restraint system in a locked position.**
- **Do not allow the passengers to lean their heads or bodies onto doors, put their arms on the doors, stretch their arms out of the window, or place objects between the doors and passengers when they are seated on seats equipped with side air bags.**

(Continued)

(Continued)

- **Never try to open or repair any components of the side air bag system. This should only be done by an authorized KIA dealer.**

Failure to follow the above instructions can result in injury or death to the vehicle occupants in an accident.

C040800APA

Why didn't my air bag go off in a collision? (Inflation and non-inflation conditions of the air bag)

There are many types of accidents in which the air bag would not be expected to provide additional protection.

These include rear impacts, second or third collisions in multiple impact accidents, as well as low speed impacts. In other words, just because your vehicle is damaged and even if it is totally unusable, don't be surprised that the air bags did not inflate.



OSA037108/OSA037105/1SAA2053

Air bag collision sensors

(1) SRS control module (2) Side impact sensor (if equipped)

FarmaSOS.com

⚠ WARNING

- **Do not hit or allow any objects to impact the locations where air bags or sensors are installed.**
  This may cause unexpected air bag deployment, which could result in serious personal injury or death.
- **If the installation location or angle of the sensors is altered in any way, the air bags may deploy when they should not or they may not deploy when they should, causing severe injury or death.**
  Therefore, do not try to perform maintenance on or around the air bag sensors. Have the vehicle checked and repaired by an authorized KIA dealer.

(Continued)

(Continued)

- **Problems may arise if the sensor installation angles are changed due to the deformation of the front bumper, body or B pillars where side collision sensors are installed. Have the vehicle checked and repaired by an authorized KIA dealer.**
- **Your vehicle has been designed to absorb impact and deploy the air bag(s) in certain collisions. Installing bumper guards or replacing a bumper with non-genuine parts may adversely affect your vehicle's collision and air bag deployment performance.**

FarmaSOS.com



C040801APA

Air bag inflation conditions

Front air bags

Front air bags are designed to inflate in a frontal collision depending on the intensity, speed or angles of impact of the front collision.


OSA038120

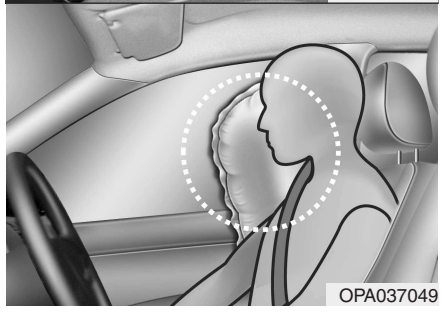
OPA037049

Side impact air bags (if equipped)

Side impact air bags are designed to inflate when an impact is detected by side collision sensors depending on the strength, speed or angles of impact resulting from a side impact collision.

Although the front air bags (driver's and front passenger's air bags) are designed to inflate only in frontal collisions, they also may inflate in other types of collisions if the front impact sensors detect a sufficient impact. Side impact air bags are designed to inflate only in side impact collisions, but they may inflate in other collisions if the side impact sensors detect a sufficient impact.

If the vehicle chassis is impacted by bumps or objects on unimproved roads, the air bags may deploy. Drive carefully on unimproved roads or on surfaces not designed for vehicle traffic to prevent unintended air bag deployment.

تلفن شبانه روزی: ۰۲۱-۸۸۸۶۲۰۸۵
FarmaSOS.com


OPA037041

C040802APA

Air bag non-inflation conditions

- In certain low-speed collisions the air bags may not deploy. The air bags are designed not to deploy in such cases because they may not provide benefits beyond the protection of the seat belts in such collisions.


OPA037042

- Frontal air bags are not designed to inflate in rear collisions, because occupants are moved backward by the force of the impact. In this case, inflated air bags would not be able to provide any additional benefit.


OSA038121

- Front air bags may not inflate in side impact collisions, because occupants move to the direction of the collision, and thus in side impacts, frontal air bag deployment would not provide additional occupant protection.

  However, side impact air bags may inflate depending on the intensity, vehicle speed and angles of impact.

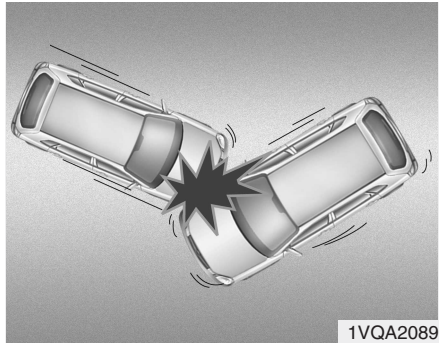
1VQA2089

- In an angled collision, the force of impact may direct the occupants in a direction where the air bags would not be able to provide any additional benefit, and thus the sensors may not deploy any air bags.

FarmasaCar.com

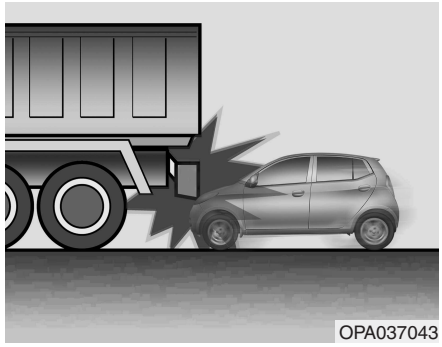
OPA037043

- Just before impact, drivers often brake heavily. Such heavy braking lowers the front portion of the vehicle causing it to “ride” under a vehicle with a higher ground clearance. Air bags may not inflate in this "under-ride" situation because deceleration forces that are detected by sensors may be significantly reduced by such “under-ride” collisions.

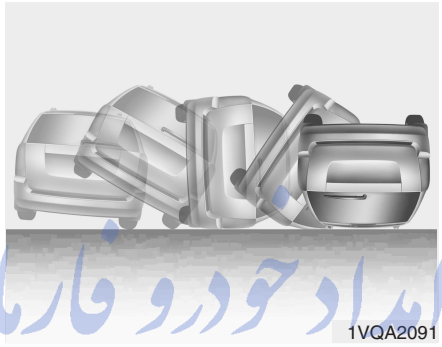
1VQA2091

- Air bags may not inflate in rollover accidents because air bag deployment would not provide protection to the occupants.
  However, side impact air bags may inflate when the vehicle is rolled over by a side impact collision, if the vehicle is equipped with side impact air bags.

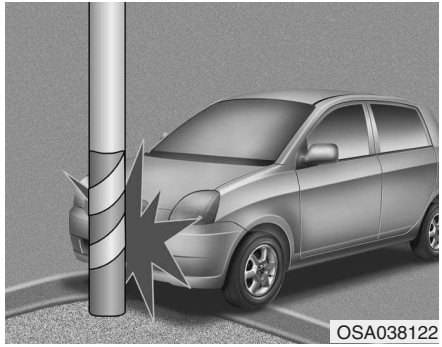
OSA038122

- Air bags may not inflate if the vehicle collides with objects such as utility poles or trees, where the point of impact is concentrated to one area and the full force of the impact is not delivered to the sensors.

امداد خودرو فارما
تلفن شبانه روزی: ۰۲۱-۸۸۸۶۲۰۸۵
FarmaSOS.com

C041100AUN

SRS Care

The SRS is virtually maintenance-free and so there are no parts you can safely service by yourself. If the SRS air bag warning light does not illuminate, or continuously remains on, have your vehicle immediately inspected by an authorized KIA dealer.

Any work on the SRS system, such as removing, installing, repairing, or any work on the steering wheel must be performed by an authorized KIA dealer. Improper handling of the SRS system may result in serious personal injury.

⚠ WARNING

- **Modification to SRS components or wiring, including the addition of any kind of badges to the pad covers or modifications to the body structure, can adversely affect SRS performance and lead to possible injury.**
- **For cleaning the air bag pad covers, use only a soft, dry cloth or one which has been moistened with plain water. Solvents or cleaners could adversely affect the air bag covers and proper deployment of the system.**
- **No objects should be placed over or near the air bag modules on the steering wheel, instrument panel, and the front passenger's panel above the glove box, because any such object could cause harm if the vehicle is in a crash severe enough to cause the air bags to inflate.**

(Continued)

(Continued)

- **If the air bags inflate, they must be replaced by an authorized KIA dealer.**
- **Do not tamper with or disconnect SRS wiring, or other components of the SRS system. Doing so could result in injury, due to accidental inflation of the air bags or by rendering the SRS inoperative.**
- **If components of the air bag system must be discarded, or if the vehicle must be scrapped, certain safety precautions must be observed. An authorized KIA dealer knows these precautions and can give you the necessary information. Failure to follow these precautions and procedures could increase the risk of personal injury.**
- **If your car was flooded and has soaked carpeting or water on the flooring, you shouldn't try to start the engine; have the car towed to an authorized KIA dealer.**

C041300AUN

Additional safety precautions

- **Never let passengers ride in the cargo area or on top of a folded-down back seat.** All occupants should sit upright, fully back in their seats with their seat belts on and their feet on the floor.
- **Passengers should not move out of or change seats while the vehicle is moving.** A passenger who is not wearing a seat belt during a crash or emergency stop can be thrown against the inside of the vehicle, against other occupants, or out of the vehicle.
- **Each seat belt is designed to restrain one occupant.** If more than one person uses the same seat belt, they could be seriously injured or killed in a collision.
- **Do not use any accessories on seat belts.** Devices claiming to improve occupant comfort or reposition the seat belt can reduce the protection provided by the seat belt and increase the chance of serious injury in a crash.
- **Passengers should not place hard or sharp objects between themselves and the air bags.** Carrying hard or sharp objects on your lap or in your mouth can result in injuries if an air bag inflates.
- **Keep occupants away from the air bag covers.** All occupants should sit upright, fully back in their seats with their seat belts on and their feet on the floor. If occupants are too close to the air bag covers, they could be injured if the air bags inflate.
- **Do not attach or place objects on or near the air bag covers.** Any object attached to or placed on the front or side air bag covers could interfere with the proper operation of the air bags.
- **Do not modify the front seats.** Modification of the front seats could interfere with the operation of the supplemental restraint system sensing components or side air bags.
- **Do not place items under the front seats.** Placing items under the front seats could interfere with the operation of the supplemental restraint system sensing components and wiring harnesses.
- **Never hold an infant or child on your lap.** The infant or child could be seriously injured or killed in the event of a crash. All infants and children should be properly restrained in appropriate child safety seats or seat belts in the rear seat.

FarmaSOS.com

⚠ WARNING

- **Sitting improperly or out of position can cause occupants to be shifted too close to a deploying air bag, strike the interior structure or be thrown from the vehicle resulting in serious injury or death.**
- **Always sit upright with the seatback in an upright position, centered on the seat cushion with your seat belt on, legs comfortably extended and your feet on the floor.**

C041400AUN

Adding equipment to or modifying your air bag-equipped vehicle

If you modify your vehicle by changing your vehicle's frame, bumper system, front end or side sheet metal or ride height, this may affect the operation of your vehicle's air bag system.

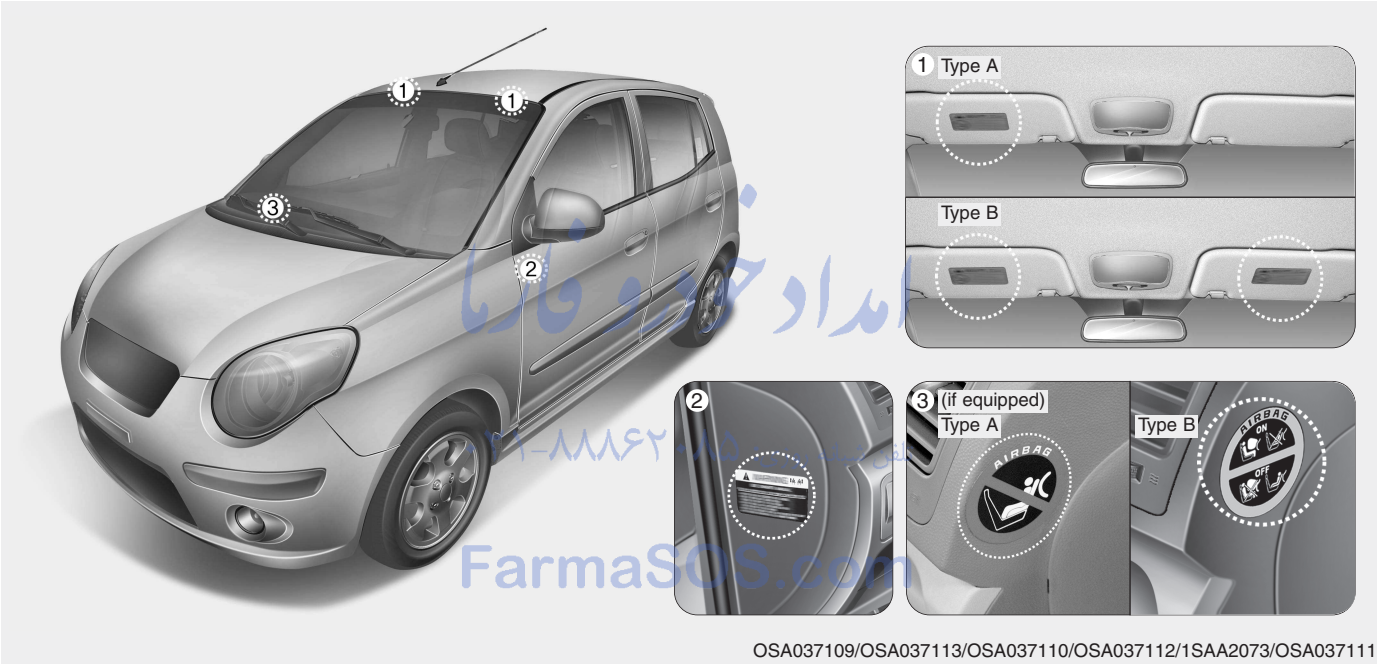

OSA037109/OSA037113/OSA037110/OSA037112/1SAA2073/OSA037111

C041200ASA

Air bag warning label

Air bag warning labels are attached to alert the driver and passengers the potential risk of the air bag system.

امداد خودرو فارما
FarmaSOS.com

Keys / 4-2
Remote keyless entry / 4-4
Theft-alarm system / 4-6
Door locks / 4-8
Tailgate / 4-11
Windows / 4-12
Hood / 4-15
Fuel filler lid / 4-17

Features of your vehicle 4

Steering wheel / 4-19
Mirrors / 4-22
Instrument cluster / 4-25
Rear parking assist system / 4-38
Hazard warning flasher / 4-41
Lighting / 4-41
Wipers and washers / 4-46
Interior light / 4-50
Defroster / 4-51
Manual climate control system / 4-52
Automatic climate control system / 4-60
Windshield defrosting and defogging / 4-67
Storage compartment / 4-70
Interior features / 4-72
Audio system / 4-77

امداد خودرو فارما
پاسخگوی شبانه روزی: ۰۲۱-۸۸۸۶۲۰۸۵
FarmaSOS.com

KEYS

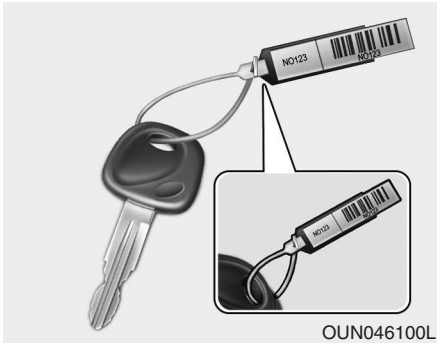

OUN046100L

D010100AUN

Record your key number

The key code number is stamped on the bar code tag attached to the key set. Should you lose your keys, this number will enable an authorized KIA dealer to duplicate the keys easily. Remove the bar code tag and store it in a safe place. Also, record the code number and keep it in a safe place (not in the vehicle).



OUN026060/OSA049001L

D010200AUN

Key operations

Used to start the engine, lock and unlock the doors.

Type B

To unfold the key, press the release button then the key will unfold automatically. To fold the key, fold the key manually while pressing the release button.

⚠ CAUTION

Do not fold the key without pressing the release button. This may damage the key.

⚠ WARNING - Ignition key

Leaving children unattended in a vehicle with the ignition key is dangerous even if the key is not in the ignition switch. Children copy adults and they could place the key in the ignition switch. The ignition key would enable children to operate power windows or other controls, or even make the vehicle move, which could result in serious bodily injury or even death. Never leave the keys in your vehicle with unsupervised children.

⚠ WARNING

Use only KIA original parts for the ignition key in your vehicle. If an aftermarket key is used, the ignition switch may not return to ON after START. If this happens, the starter will continue to operate causing damage to the starter motor and possible fire due to excessive current in the wiring.

امداد خودرو فارما
تلفن شبانه روزی: ۰۹۱۳۸۸۶۲۰۸۵
FarmaCar.com

D010300CUN

Immobilizer system (if equipped)

Your vehicle may be equipped with an electronic engine immobilizer system to reduce the risk of unauthorized vehicle use.

Your immobilizer system is comprised of a small transponder in the ignition key and electronic devices inside the vehicle.

With the immobilizer system, whenever you insert your ignition key into the ignition switch and turn it to ON, it checks and determines and verifies if the ignition key is valid or not.

If the key is determined to be valid, the engine will start.

If the key is determined to be invalid, the engine will not start.

To deactivate the immobilizer system:

Insert the ignition key into the key cylinder and turn it to the ON position.

To activate the immobilizer system:

Turn the ignition key to the OFF position. The immobilizer system activates automatically. Without a valid ignition key for your vehicle, the engine will not start.

⚠ WARNING

In order to prevent theft of your vehicle, do not leave spare keys anywhere in your vehicle. Your Immobilizer password is a customer unique password and should be kept confidential. Do not leave this number anywhere in your vehicle.

✻ NOTICE

When starting the engine, do not use the key with other immobilizer keys around. Otherwise the engine may not start or may stop soon after it starts. Keep each key separate in order to avoid a starting malfunction.

⚠ CAUTION

Do not put metal accessories near the ignition switch. Metal accessories may interrupt the transponder signal and may prevent the engine from being started.

✻ NOTICE

If you need additional keys or lose your keys, consult an authorized KIA dealer.

⚠ CAUTION

The transponder in your ignition key is an important part of the immobilizer system. It is designed to give years of trouble-free service, however you should avoid exposure to moisture, static electricity and rough handling. Immobilizer system malfunction could occur.

⚠ CAUTION

Do not change, alter or adjust the immobilizer system because it could cause the immobilizer system to malfunction and should only be serviced by an authorized KIA dealer.

Malfunctions caused by improper alterations, adjustments or modifications to the immobilizer system are not covered by your vehicle manufacturer warranty.

FarnaSOS.com

REMOTE KEYLESS ENTRY (IF EQUIPPED)



Remote keyless entry system operations

Lock (1)

All doors (and tailgate) are locked if the lock button is pressed when a front door is unlocked.

If all doors (and tailgate) are closed, the hazard warning lights blink once to indicate that all doors (and tailgate) are locked.

However, if any door (or tailgate) remains open, the hazard warning lights will not operate. If all doors (and tailgate) are closed after the lock button is pressed, the hazard warning lights blink.

Unlock (2)

All doors (and tailgate) are unlocked if the unlock button is pressed when both front doors are locked.

The hazard warning lights will blink twice again to indicate that all doors (and tailgate) are unlocked.

After pressing this button, the doors (and tailgate) will be locked automatically unless you open any door within 30 seconds.

امداد خودرو فارما
تلفن شبانه روزی: ۰۲۱-۸۸۸۶۲۰۸۵
FarmaSOS.com

D020200ASA

Transmitter precautions

✻ NOTICE

The transmitter will not work if any of following occur:

- **The ignition key is in the ignition switch.**
- **You exceed the operating distance limit (about 5 m [16 feet]).**
- **The battery in the transmitter is weak.**
- **Other vehicles or objects may be blocking the signal.**
- **The weather is extremely cold.**
- **The transmitter is close to a radio transmitter such as a radio station or an airport which can interfere with normal operation of the transmitter.**

When the transmitter does not work correctly, open and close the door with the ignition key. If you have a problem with the transmitter, contact an authorized KIA dealer.

⚠ CAUTION

Keep the transmitter away from water or any liquid. If the keyless entry system is inoperative due to exposure to water or liquids, it will not be covered by your manufacturer vehicle warranty.

⚠ CAUTION

Changes or modifications not expressly approved by the party responsible for compliance could void the user's authority to operate the equipment. If the keyless entry system is inoperative due to changes or modifications not expressly approved by the party responsible for compliance, it will not be covered by your manufacturer's vehicle warranty.



D020300ASA

Battery replacement

The transmitter uses a 3 volt lithium battery which will normally last for several years. When replacement is necessary, use the following procedure.

1. Insert a slim tool into the slot and gently pry open the transmitter center cover.
2. Replace the battery with new one. When replacing the battery, make sure the battery positive "+" symbol faces up as indicated in the illustration.
3. Install the battery in the reverse order of removal.

For transmitter replacement, see an authorized KIA dealer to reprogram the transmitter.

⚠ CAUTION

- ***The keyless entry system transmitter is designed to give you years of trouble-free use, however it can malfunction if exposed to moisture or static electricity. If you are unsure how to use your transmitter or replace the battery, contact an authorized KIA dealer.***
- ***Using the wrong battery can cause the transmitter to malfunction. Be sure to use the correct battery.***
- ***To avoid damaging the transmitter, don't drop it, get it wet, or expose it to heat or sunlight.***

⚠ CAUTION

An inappropriately disposed battery can be harmful to the environment and human health.
Dispose the battery according to your local law(s) or regulation.

FarmaSOS.com

THEFT-ALARM SYSTEM (IF EQUIPPED)

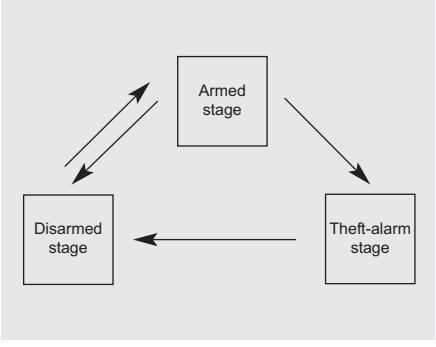

D030000AEN

This system is designed to provide protection from unauthorized entry into the car. This system is operated in three stages: the first is the "Armed" stage, the second is the "Theft-alarm" stage, and the third is the "Disarmed" stage. If triggered, the system provides an audible alarm with blinking of the hazard warning lights.

D030100ASA

Armed stage

Park the car and stop the engine. Arm the system as described below.

1. Remove the ignition key from the ignition switch and exit the vehicle.
2. Make sure that all doors (and tailgate) and engine hood are closed and latched.
3. Lock the doors using the transmitter of the keyless entry system.

After completion of the steps above, the hazard warning lights will blink once to indicate that the system is armed.

If any door (or tailgate) or engine hood remains open, the hazard warning lights will not operate and the theft-alarm will not arm. If all doors (and tailgate) and engine hood are closed after the lock button is pressed, the hazard warning lights will blink once and the theft-alarm system will be armed.

✻ NOTICE

The theft-alarm system by the key can be activated by an authorized KIA dealer.
If you want this feature, consult an authorized KIA dealer.

Do not arm the system until all passengers have left the vehicle. If the system is armed while a passenger(s) remains in the vehicle, the alarm may be activated when the remaining passenger(s) leave the vehicle.

D030200AUN-EE

Theft-alarm stage

The alarm will be activated if any of the following occurs while the system is armed.

- A front or rear door is opened without using the transmitter.
- The tailgate is opened without using the transmitter.
- The engine hood is opened.

The siren will sound and the hazard warning lights will blink continuously for approximately 30 seconds (for Europe, Middle East Area and China), and repeat the alarm 3 times unless the system is disarmed (except Europe, Middle East Area and China). To turn off the system, unlock the doors with the transmitter.

D030400ASA

Disarmed stage

The system will be disarmed when the doors (and tailgate) are unlocked with the transmitter.

After depressing the unlock button, the hazard warning lights will blink twice to indicate that the system is disarmed.

After depressing the unlock button, if any door (or tailgate) is not opened within 30 seconds, the system will be rearmed.

امداد خودرو فارما
تلفن شبانه روزی: ۰۲۱-۸۸۸۷۲۰۸۵
FarmaSOS.com

✻ NOTICE

- **Avoid trying to start the engine while the alarm is activated. The vehicle starting motor is disabled during the theft-alarm stage.**
  If the system is not disarmed with the transmitter, insert the key into the ignition switch, turn the ignition switch to the ON position and wait for 30 seconds. Then the system will be disarmed. (Except China)
- **If you lose your keys, consult your authorized KIA dealer.**

⚠ CAUTION

Do not change, alter or adjust the theft-alarm system because it could cause the theft-alarm system to malfunction and should only be serviced by an authorized KIA dealer.

Malfunctions caused by improper alterations, adjustments or modifications to the theft-alarm system are not covered by your vehicle manufacturer warranty.

DOOR LOCKS

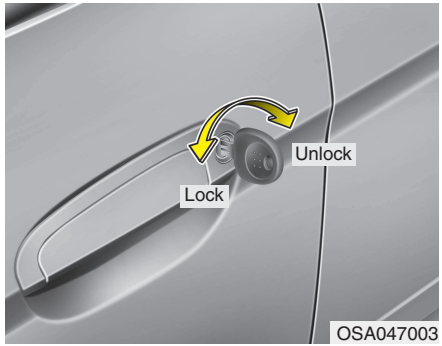

D050100ASA

Operating door locks from outside the vehicle

- Turn the key toward the rear of the vehicle to unlock and toward the front of the vehicle to lock.
- If you lock/unlock the driver's door with a key, all vehicle doors will lock/unlock automatically. (if equipped with central door lock system)
- Doors can also be locked and unlocked with the transmitter. (if equipped)
- Once the doors are unlocked, they may be opened by pulling the door handle.
- When closing the door, push the door by hand. Make sure that doors are closed securely.

✻ NOTICE

- **In cold and wet climates, door lock and door mechanisms may not work properly due to freezing conditions.**
- **If the door is locked/unlocked multiple times in rapid succession with either the vehicle key or door lock switch, the system may stop operating temporarily in order to protect the circuit and prevent damage to system components.**

FarmaSOS.com

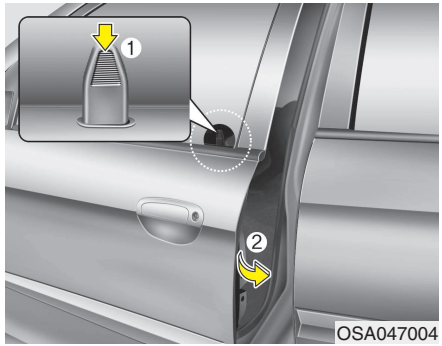

- To lock a door without the key, push the inside door lock lever (1) to the "Lock" position and close the door (2).
- If you lock the door with the driver's door lock lever (1), all vehicle doors will lock automatically. (if equipped with central door lock system)

✻ NOTICE

Always remove the ignition key, engage the parking brake, close all windows and lock all doors when leaving your vehicle unattended.

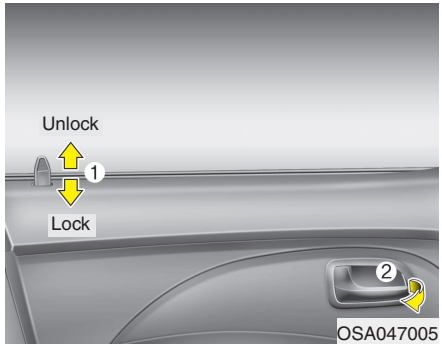

Operating door locks from inside the vehicle

D050201ASA

With the door lock lever

- To unlock a door, pull the door lock lever (1) to the “Unlock” position.
- To lock a door, push the door lock lever (1) to the “Lock” position.
- To open a door, pull the door handle (2) outward.
- If you lock/unlock the front door with the door lock lever, all vehicle doors will lock/unlock automatically. (if equipped with central door lock system)

⚠ WARNING - Doors

- **The doors should always be fully closed and locked while the vehicle is in motion to prevent accidental opening of the door. Locked doors will also discourage potential intruders when the vehicle stops or slows.**
- **Be careful when opening doors and watch for vehicles, motorcycles, bicycles or pedestrians approaching the vehicle in the path of the door. Opening a door when something is approaching can cause damage or injury.**

تلفن شبانه روزی: ۰۲۱-۸۸۸۶۲۰۸۵
FarmaSOS.com

⚠ WARNING - Unlocked vehicles

Leaving your vehicle unlocked can invite theft or possible harm to you or others from someone hiding in your vehicle while you are gone. Always remove the ignition key, engage the parking brake, close all windows and lock all doors when leaving your vehicle unattended.

⚠ WARNING - Unattended children

An enclosed vehicle can become extremely hot, causing death or severe injury to unattended children or animals who cannot escape the vehicle. Furthermore, children might operate features of the vehicle that could injure them, or they could encounter other harm, possibly from someone gaining entry to the vehicle. Never leave children or animals unattended in your vehicle.

D050300AEN

Impact sensing door unlock system (if equipped)

All doors will be automatically unlocked when an impact causes the air bags to deploy.

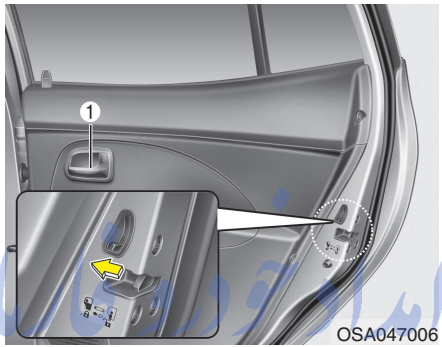

D050500ASA

Child-protector rear door lock

The child safety lock is provided to help prevent children from accidentally opening the rear doors from inside the vehicle. The rear door safety locks should be used whenever children are in the vehicle.

1. Open the rear door.
2. Push the child safety lock located on the rear edge of the door to the lock position. When the child safety lock is in the lock ( ) position, the rear door will not open even though the inner door handle is pulled.
3. Close the rear door.

To open the rear door, pull the outside door handle.

Even though the doors may be unlocked, the rear door will not open by pulling the inner door handle (1) until the rear door child safety lock is unlocked ( ).

⚠ WARNING - Rear door locks

If children accidentally open the rear doors while the vehicle is in motion, they could fall out and be severely injured or killed. To prevent children from opening the rear doors from the inside, the rear door safety locks should be used whenever children are in the vehicle.

FarmaSOS.com

TAILGATE

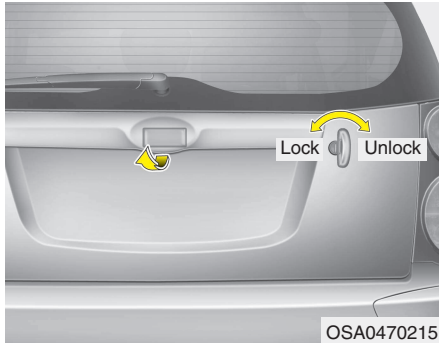

D070100ASA

Opening the tailgate

- The tailgate is locked or unlocked by turning the key to the "Lock" or "Unlock" position.
- The tailgate is locked or unlocked when all doors are locked or unlocked with the key, transmitter or driver's door lock lever. (if equipped with central door lock system)
- If unlocked, the tailgate can be opened by pressing the handle and than pulling up the hatch.

✻ NOTICE

In cold and wet climates, door lock and door mechanisms may not work properly due to freezing conditions.

⚠ WARNING

The tailgate swings upward. Make sure no objects or people are near the rear of the vehicle when opening the tailgate.

⚠ CAUTION

Make certain that you close the tailgate before driving your vehicle. Possible damage may occur to the tailgate lift cylinders and attached hardware if the tailgate is not closed prior to driving.

FarmaSOS.com

D070200AUN

Closing the tailgate

To close the tailgate, lower and push down the tailgate firmly. Make sure that the tailgate is securely latched.

⚠ WARNING - Exhaust fumes

If you drive with the tailgate open, you will draw dangerous exhaust fumes into your vehicle which can cause serious injury or death to vehicle occupants.

If you must drive with the tailgate open, keep the air vents and all windows open so that additional outside air comes into the vehicle.

⚠ WARNING - Rear cargo area

Occupants should never ride in the rear cargo area where no restraints are available. To avoid injury in the event of an accident or sudden stops, occupants should always be properly restrained.

WINDOWS

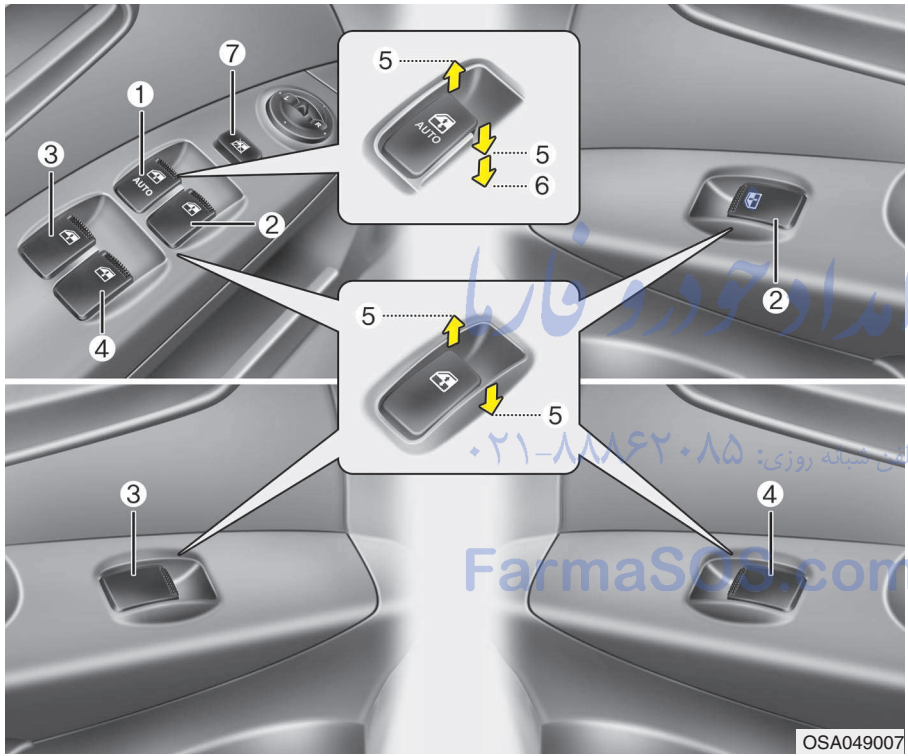

D080000APA

(1) Driver's door power window switch
(2) Front passenger's door power window switch
(3) Rear door (left) power window switch*
(4) Rear door (right) power window switch*
(5) Window opening and closing
(6) Automatic power window down* (Driver's window)
(7) Power window lock button*

* : if equipped

✻ NOTICE

In cold and wet climates, power windows may not work properly due to freezing conditions.

امداد خودرو فارما
تلفن شبانه روزی: ۰۲۱-۸۸۶۲۰۸۵
FarmaSOS.com

D080100AUN

Power windows (if equipped)

The ignition switch must be in the ON position for power windows to operate.

Each door has a power window switch that controls the door's window. The driver has a power window lock switch which can block the operation of passenger windows.

The power windows can be operated for approximately 30 seconds after the ignition key is removed or turned to the ACC or LOCK position. However, if the front doors are opened, the power windows cannot be operated within the 30 second period after the ignition key is removed (if equipped).

✻ NOTICE

While driving with the rear windows down or with the sunroof (if equipped) in an open(or partially open position), your vehicle may demonstrate a wind buffeting or pulsation noise. This noise is a normal occurrence and can be reduced or eliminated by taking the following actions. If the noise occurs with one or both of the rear windows down, partially lower both front windows approximately one inch. If you experience the noise with the snroof open, slightly reduce the size of the sunroof opening.

D080101AUN

Window opening and closing

The driver's door has a master power window switch that controls all the windows in the vehicle.

To open or close a window, press down or pull up the front portion of the corresponding switch to the first detent position (5).

امداد خودرو فارما
تلفن شبانه روزی: ۰۲۱-۸۸۸۶۲۰۸۵
FarmaSOS.com

D080102AUN

Auto down window (Driver's window) (if equipped)

Depressing the power window switch momentarily to the second detent position (6) completely lowers the window even when the switch is released. To stop the window at the desired position while the window is in operation, pull up the switch to the opposite direction of the movement.



D080104ASA

Power window lock button (if equipped)

- The driver can disable the power window switches on the passenger doors by depressing the power window lock button located on the driver's door to the LOCK position (pressed).
- **When the power window lock button is in the LOCK position (pressed), the driver's master control cannot operate the passenger door power windows.**

⚠ CAUTION

- ***To prevent possible damage to the power window system, do not open or close two windows or more at the same time. This will also ensure the longevity of the fuse.***
- ***Never try to operate the main switch on the driver's door and the individual door window switch in opposing directions at the same time. If this is done, the window will stop and cannot be opened or closed.***

تلفن شبانه روزی: ۰۲۱-۸۸۸۶۲۰۸۵
FarmaSOS.com

⚠ WARNING - Windows

- **NEVER leave the ignition key in the vehicle.**
- **NEVER leave any child unattended in the vehicle. Even very young children may inadvertently cause the vehicle to move, entangle themselves in the windows, or otherwise injure themselves or others.**
- **Always double check to make sure all arms, hands, head and other obstructions are safely out of the way before closing a window.**
- **Do not allow children play with the power windows. Keep the driver's door power window lock switch in the LOCK position (pressed). Serious injury can result from unintentional window operation by the child.**
- **Do not extend face or arms outside through the window opening while driving.**

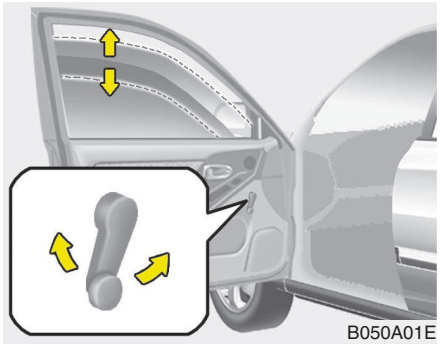

D080200APA

Manual windows (if equipped)

To raise or lower the window, turn the window regulator handle clockwise or counterclockwise.

⚠ WARNING

When opening or closing the windows, make sure your passenger's arms, hands and body are safely out of the way.

HOOD

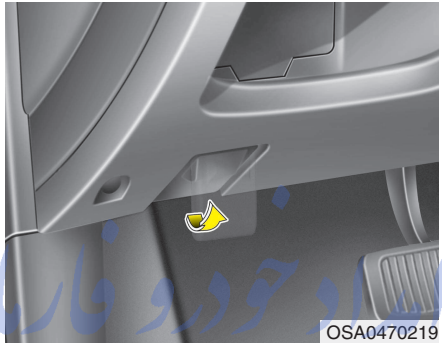

D090100ASA

Opening the hood

1. Pull the release lever to unlatch the hood. The hood should pop open slightly.

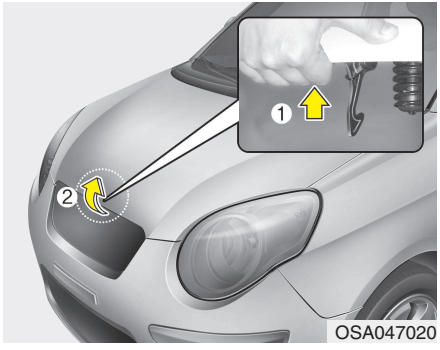

2. Go to the front of the vehicle, raise the hood slightly, pull the secondary latch (1) inside of the hood center and lift the hood (2).

FarmaSOS.com

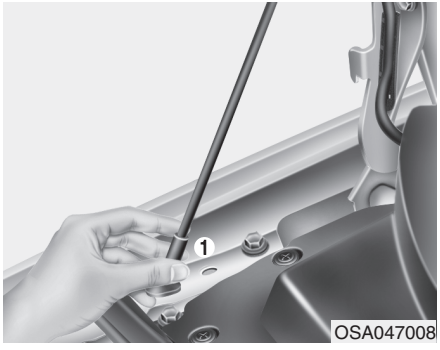

3. Lift the hood and hold it open with the support rod by inserting the free end of the rod into the slot (1).

⚠ WARNING - Hot parts

Grasp the support rod in the area wrapped in plastic. The plastic will help prevent you from being burned by hot metal when the engine is hot.

D090200AUN

Closing the hood

1. Before closing the hood, check the following:
   - All filler caps in the engine compartment must be correctly installed.
   - Gloves, rags or any other combustible material must be removed from the engine compartment.
2. Return the support rod to its clip to prevent it from rattling.
3. Lower the hood until it is about 30 cm (1 ft.) above the closed position and let it drop. Make sure that it locks into place.

تلفن شبانه روزی: ۰۲۱-۸۸۸۶۲۰۸۵
Farmaaos.com

⚠ WARNING

- **Before closing the hood, ensure that all obstructions are removed from the hood opening. Closing the hood with an obstruction present in the hood opening may result in property damage or severe personal injury.**
- **Do not leave gloves, rags or any other combustible material in the engine compartment. Doing so may cause a heat-induced fire.**

⚠ WARNING

- **Always double check to be sure that the hood is firmly latched before driving away. If it is not latched, the hood could open while the vehicle is being driven, causing a total loss of visibility, which might result in an accident.**
- **The support rod must be inserted completely into the hole provided in the hood whenever you inspect the engine compartment. This will prevent the hood from falling and possibly injuring you.**
- **Do not move the vehicle with the hood raised. The view will be blocked and the hood could fall or be damaged.**

FUEL FILLER LID

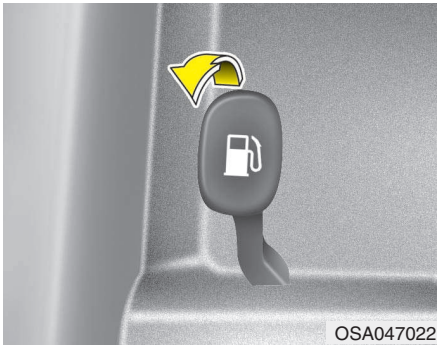
OSA047022

D100100ASA

Opening the fuel filler lid

The fuel filler lid must be opened from inside the vehicle by pulling up the fuel filler lid opener located on the front floor area under the driver's seat.

✻ NOTICE

If the fuel filler lid does not open because ice has formed around it, tap lightly or push on the lid to break the ice and release the lid. Do not pry on the lid. If necessary, spray around the lid with an approved de-icer fluid (do not use radiator anti-freeze) or move the vehicle to a warm place and allow the ice to melt.

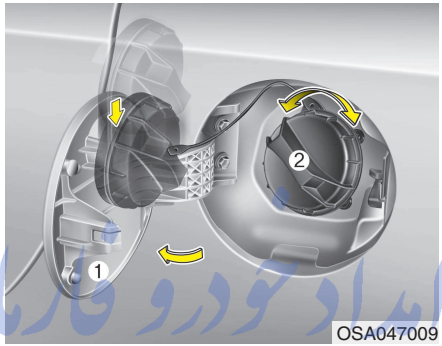

OSA047009

1. Stop the engine.
2. To open the fuel filler lid, pull the fuel filler lid opener up.
3. Pull open the fuel filler lid (1).
4. To remove the cap, turn the fuel tank cap (2) counterclockwise.
5. Refuel as needed.

ایساد خودرو فارما
تلفن شبانه روزی
FarmaSOS.com

D100200ASA

Closing the fuel filler lid

1. To install the cap, turn it clockwise until the cap is securely tightened.
2. Close the fuel filler lid and push it lightly and make sure that it is securely closed.

D100300AUN

⚠ WARNING - Refueling

- **If pressurized fuel sprays out, it can cover your clothes or skin and thus subject you to the risk of fire and burns. Always remove the fuel cap carefully and slowly. If the cap is venting fuel or if you hear a hissing sound, wait until the condition stops before completely removing the cap.**
- **Do not "top off" after the nozzle automatically shuts off when refueling.**
- **Always check that the fuel cap is installed securely to prevent fuel spillage in the event of an accident.**

⚠ WARNING - Refueling dangers

Automotive fuels are flammable materials. When refueling, please note the following guidelines carefully. Failure to follow these guidelines may result in severe personal injury, severe burns or death by fire or explosion.

- **Read and follow all warnings posted at the gas station facility.**
- **Before refueling note the location of the Emergency Gasoline Shut-Off, if available, at the gas station facility.**
- **Before touching the fuel nozzle, you should eliminate potentially dangerous static electricity discharge by touching another metal part of the vehicle, a safe distance away from the fuel filler neck, nozzle, or other gas source.**

(Continued)

(Continued)

- **Do not get back into a vehicle once you have begun refueling since you can generate static electricity by touching, rubbing or sliding against any item or fabric (polyester, satin, nylon, etc.) capable of producing static electricity. Static electricity discharge can ignite fuel vapors resulting in rapid burning. If you must re-enter the vehicle, you should once again eliminate potentially dangerous static electricity discharge by touching a metal part of the vehicle, away from the fuel filler neck, nozzle or other gasoline source.**

(Continued)

(Continued)

- **When using an approved portable fuel container, be sure to place the container on the ground prior to refueling. Static electricity discharge from the container can ignite fuel vapors causing a fire. Once refueling has begun, contact with the vehicle should be maintained until the filling is complete.**
  Use only approved portable plastic fuel containers designed to carry and store gasoline.
- **Do not use cellular phones while refueling. Electric current and/or electronic interference from cellular phones can potentially ignite fuel vapors causing a fire.**
- **When refueling, always shut the engine off. Sparks produced by electrical components related to the engine can ignite fuel vapors causing a fire. Once refueling is complete, check to make sure the filler cap and filler door are securely closed, before starting the engine.**

(Continued)

FarmaSOS.com

(Continued)

- **DO NOT use matches or a lighter and DO NOT SMOKE or leave a lit cigarette in your vehicle while at a gas station especially during refueling. Automotive fuel is highly flammable and can, when ignited, result in fire.**
- **If a fire breaks out during refueling, leave the vicinity of the vehicle, and immediately contact the manager of the gas station and then contact the local fire department. Follow any safety instructions they provide.**

⚠ CAUTION

- ***Make sure to refuel your vehicle according to the "Fuel requirements" suggested in section 1.***
- ***If the fuel filler cap requires replacement, use only a genuine KIA cap or the equivalent specified for your vehicle. An incorrect fuel filler cap can result in a serious malfunction of the fuel system or emission control system.***
- ***Do not spill fuel on the exterior surfaces of the vehicle. Any type of fuel spilled on painted surfaces may damage the paint.***
- ***After refueling, make sure the fuel cap is installed securely to prevent fuel spillage in the event of an accident.***

FarmaSOS.com

STEERING WHEEL

D130100AHM

Power steering (if equipped)

Power steering uses energy from the engine to assist you in steering the vehicle. If the engine is off or if the power steering system becomes inoperative, the vehicle may still be steered, but it will require increased steering effort.

Should you notice any change in the effort required to steer during normal vehicle operation, have the power steering checked by an authorized KIA dealer.

⚠ CAUTION

Never hold the steering wheel to the extreme right or left for more than 5 seconds with the engine running. Holding the steering wheel for more than 5 seconds in either position may cause damage to the power steering pump.

✻ NOTICE

- **If the power steering drive belt breaks or if the power steering pump malfunctions, the steering effort will greatly increase.**
- **If the vehicle is parked for extended periods outside in cold weather (below -10°C/14°F), the power steering may require increased effort when the engine is first started. This is caused by increased fluid viscosity due to the cold weather and does not indicate a malfunction.**
  When this happens, increase the engine RPM by depressing the accelerator until the RPM reaches 1,500 rpm then release or let the engine idle for two or three minutes to warm up the fluid.

D130200ASA

Electric power steering (if equipped)

Power steering uses the motor to assist you in steering the vehicle. If the engine is off or if the power steering system becomes inoperative, the vehicle may still be steered, but it will require increased steering effort.

The motor driven power steering is controlled by power steering control unit which sense the steering wheel torque, steering wheel position and vehicle speed to command the motor.

The steering effort becomes heavier as the vehicle's speed increases and becomes lighter as the vehicle's speed decreases for better control of the steering wheel.

Should you notice any change in the effort required to steer during normal vehicle operation, have the power steering checked by an authorized Kia dealer.

✻ NOTICE

The following symptoms may occur during normal vehicle operation:

- **The EPS warning light does not illuminate.**
- **The steering effort is high immediately after turning the ignition switch on. This happens as the system performs the EPS system diagnostics. When the diagnostics is completed, the steering wheel will return to its normal condition.**
- **A click noise may be heard from the EPS relay after the ignition switch is turned to the ON or LOCK position.**
- **Motor noise may be heard when the vehicle is at a stop or at a low driving speed.**
- **The steering effort can suddenly increase, if the operation of the EPS system is stopped to prevent serious accidents when the malfunction of EPS system is detected by self-diagnosis.**
- **The steering effort increases if the steering wheel is rotated continuously when the vehicle is not in motion. However, after a few minutes, it will return to its normal condition.**

D130300AUN

Tilt steering (if equipped)

Tilt steering allows you to adjust the steering wheel before you drive. You can also raise it to give your legs more room when you exit and enter the vehicle.

The steering wheel should be positioned so that it is comfortable for you to drive, while permitting you to see the instrument panel warning lights and gauges.

⚠ WARNING

- **Never adjust the angle of the steering wheel while driving. You may lose steering control and cause severe personal injury, death or accidents.**
- **After adjusting, push the steering wheel both up and down to be certain it is locked in position.**

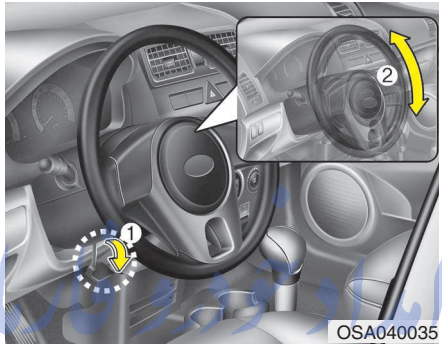

OSA040035

D130301AEN

To change the steering wheel angle, pull down the lock-release lever (1), adjust the steering wheel to the desired angle (2), then pull up the lock-release lever to lock the steering wheel in place. Be sure to adjust the steering wheel to the desired position before driving.


OAM049022

D130500AUN

Horn

To sound the horn, press the horn symbol on your steering wheel.

Check the horn regularly to be sure it operates properly.

✻ NOTICE

To sound the horn, press the area indicated by the horn symbol on your steering wheel (see illustration). The horn will operate only when this area is pressed.

⚠ CAUTION

Do not strike the horn severely to operate it, or hit it with your fist. Do not press on the horn with a sharp-pointed object.

FarmaSOS.com

MIRRORS

D140100ASA

Inside rearview mirror

Adjust the rearview mirror so that the center view through the rear window is seen. Make this adjustment before you start driving.

⚠ WARNING - Rear visibility

Do not place objects in the rear seat or cargo area which would interfere with your vision through the rear window.

⚠ WARNING

Do not adjust the rearview mirror while the vehicle is moving. This could result in loss of control, and an accident which could cause death, serious injury or property damage.

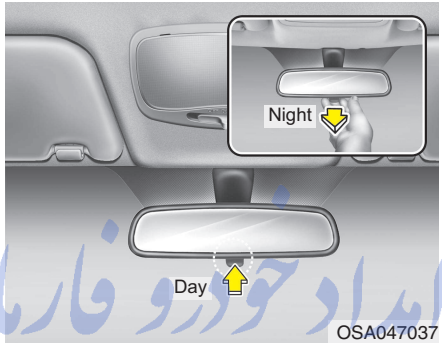

D140101BSA

Day/night rearview mirror (if equipped)

Make this adjustment before you start driving and while the day/night lever is in the day position.

Pull the day/night lever toward you to reduce the glare from the headlights of vehicles behind you during night driving.

Remember that you may lose some rearview clarity in the night position.

D140200BSA

Outside rearview mirror

Be sure to adjust the mirror angles before driving.

Your vehicle is equipped with both left-hand and right-hand outside rearview mirrors. The mirrors can be adjusted remotely with the control levers or remote switch, depending on the type of mirror control installed. The mirror heads can be folded back to prevent damage during an automatic car wash or when passing through a narrow street.

⚠ WARNING - Rearview mirrors

- **The passenger's side outside rearview mirror is convex. In some countries, the driver's side outside rearview mirror is also convex. Objects seen in the mirror are closer than they appear.**
- **Use your interior rearview mirror or direct observation to determine the actual distance of following vehicles when changing lanes.**

امداد خودرو فارما
FarmaSOS.com

⚠ CAUTION

Do not scrape ice off the mirror face; this may damage the surface of the glass. If ice should restrict movement of the mirror, do not force the mirror for adjustment. To remove ice, use a deicer spray, or a sponge or soft cloth with very warm water.

⚠ CAUTION

If the mirror is jammed with ice, do not adjust the mirror by force. Use an approved spray de-icer (not radiator antifreeze) to release the frozen mechanism or move the vehicle to a warm place and allow the ice to melt.

⚠ WARNING

Do not adjust or fold the outside rearview mirrors while the vehicle is moving. This could result in loss of control, and an accident which could cause death, serious injury or property damage.

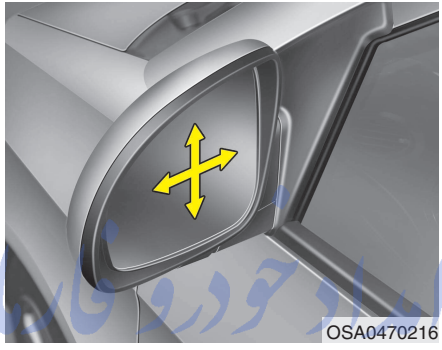

D140201APA

Adjusting the outside rearview mirror

Manual control (if equipped)

To adjust an outside mirror, move the mirror.

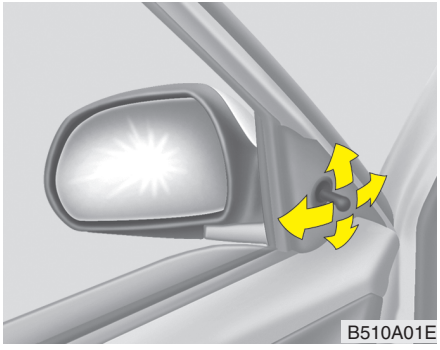

Manual remote control (if equipped)

To adjust an outside mirror, move the control lever.

FarmaSOS.com



Electric remote control (if equipped)

The electric remote control mirror switch allows you to adjust the position of the left and right outside rearview mirrors. To adjust the position of either mirror, move the lever (1) to R or L to select the right side mirror or the left side mirror, then press a corresponding point on the mirror adjustment control to position the selected mirror up, down, left or right.

After adjustment, put the switch into neutral (center) position to prevent inadvertent adjustment.

⚠ CAUTION

- ***The mirrors stop moving when they reach the maximum adjusting angles, but the motor continues to operate while the switch is depressed. Do not press the switch longer than necessary, the motor may be damaged.***
- ***Do not attempt to adjust the outside rearview mirror by hand. Doing so may damage the parts.***

تلفن شبانه روزی: ۰۲۱-۸۸۸۶۲۰۸۵
FarmaSOS.com

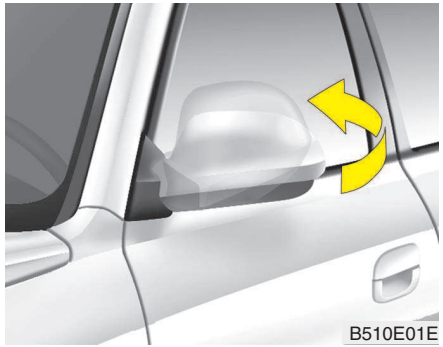

D140202AEN

Folding the outside rearview mirror

To fold the outside rearview mirror, grasp the housing of the mirror and then fold it toward the rear of the vehicle.

INSTRUMENT CLUSTER

■ Type A



■ Type B



1. Tachometer (if equipped)
2. Turn signal indicators
3. Speedometer
4. Engine temperature indicator
5. Warning and indicator lights
6. Odometer / Tripmeter
7. Tripmeter mode/reset button
8. Fuel gauge

★ : will say if equipped with Passenger's front air bag ON/OFF switch

※ The actual cluster in the vehicle may differ from the illustration.

OSA049050L/OSA049052L

D150000BSA

تلفن شبانه روزی: ۰۲۱-۸۸۸۶۲۰۸۵
FarmaGS.com

■ Type C



■ Type D



1. Tachometer (if equipped)
2. Turn signal indicators
3. Speedometer
4. Engine temperature indicator
5. Warning and indicator lights
6. Odometer / Tripmeter
7. Tripmeter mode/reset button
8. Fuel gauge

※ The actual cluster in the vehicle may differ from the illustration.

OSA049350L/OSA049351L

تلفن شبانه روزی: ۰۲۱-۸۸۸۶۲۰۸۵
FarmaCG.com



OSA0490360/OSA0400361/OSA0490362/OSA0490365/OSA0490364/OSA0400363/OSA0490366/OSA0400367

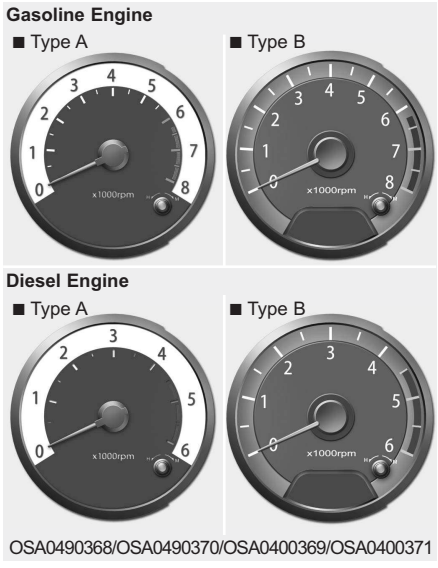

OSA0490368/OSA0490370/OSA0400369/OSA0400371

FarmaSOS.com

Gauges

D150201AUN

Speedometer

The speedometer indicates the forward speed of the vehicle.

The speedometer is calibrated in kilometers per hour and/or miles per hour.

D150202ASA

Tachometer (if equipped)

The tachometer indicates the approximate number of engine revolutions per minute (rpm).

Use the tachometer to select the correct shift points and to prevent lugging and/or over-revving the engine.

When the door is open, or if the engine is not started within 1 minute, the tachometer pointer may move slightly to the ON position with the engine OFF. This movement is normal and will not affect the accuracy of the tachometer once the engine is running.

⚠ CAUTION

Do not operate the engine within the tachometer's RED ZONE.

This may cause severe engine damage.

D150204AUN

Fuel gauge

The fuel gauge indicates the approximate amount of fuel remaining in the fuel tank. The fuel tank capacity is given in section 8. The fuel gauge is supplemented by a low fuel warning light, which will illuminate when the fuel tank is near empty.

On inclines or curves, the fuel gauge pointer may fluctuate or the low fuel warning light may come on earlier than usual due to the movement of fuel in the tank.

⚠ WARNING - Fuel gauge

Running out of fuel can expose vehicle occupants to danger.

You must stop and obtain additional fuel as soon as possible after the warning light comes on or when the gauge indicator comes close to the E level.

⚠ CAUTION

Avoid driving with a very low fuel level. If you run out of fuel, it could cause the engine to misfire and result in excessive loading of the catalytic converter.

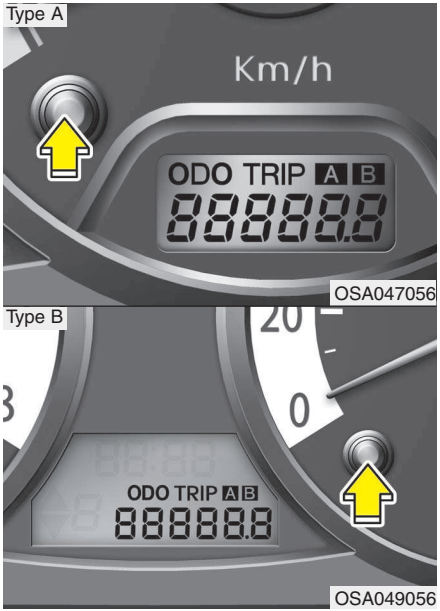

D150205ASA

Odometer/Tripmeter

You can choose the odometer, tripmeter A and tripmeter B by pressing the tripmeter mode button.



Odometer

The odometer indicates the total distance the vehicle has been driven.

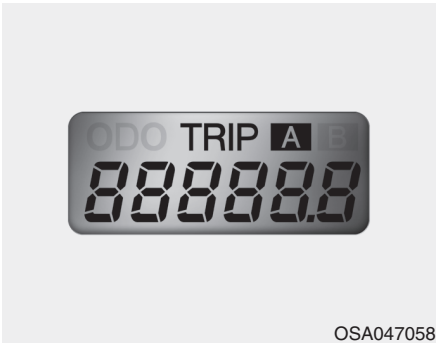

Tripmeter

TRIP A: Tripmeter A

TRIP B: Tripmeter B

The tripmeter indicates the distance of individual trips selected by the driver. Tripmeter A and B can be reset to 0 by pressing the reset button for 1 second or more, and then releasing.

امداد خودرو فارما
تلفن شبانه روزی: ۰۲۱-۸۸۸۶۲۰۸۵
FarmaSOS.com

D150300AUN

Warnings and indicators

All warning lights are checked by turning the ignition switch ON (do not start the engine). Any light that does not illuminate should be checked by an authorized KIA dealer.

After starting the engine, check to make sure that all warning lights are off. If any are still on, this indicates a situation that needs attention. When releasing the parking brake, the brake system warning light should go off. The fuel warning light will stay on if the fuel level is low.

D150301BSA

Engine temperature indicator

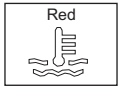

The indicator shows the temperature of the engine coolant when the ignition switch is ON.

The red indicator illuminates if the temperature of the engine coolant is above 120±3°C (248±5.5°F).

Do not continue driving with an overheated engine. If your vehicle overheats, refer to “Overheating” in the Index.

✻ NOTICE

If the red engine temperature indicator illuminates, it indicates overheating that may damage the engine.

D150302AUN

Air bag warning light (if equipped)



This warning light will illuminate for approximately 6 seconds each time you turn the ignition switch to the ON position.

This light also comes on when the Supplemental Restraint System (SRS) is not working properly. If the air bag warning light does not come on, or continuously remains on after operating for about 6 seconds when you turned the ignition switch to the ON position or started the engine, or if it comes on while driving, have the SRS inspected by an authorized KIA dealer.

FarmaSOS.com

D150335APA



Passenger's front air bag OFF indicator (if equipped)

The passenger's front air bag OFF indicator illuminates for about 4 seconds after the ignition switch is turned to the ON position.

The passenger's front air bag OFF indicator also comes on when the passenger's front air bag ON/OFF switch is set to the OFF position and turns off when the passenger's front air bag ON/OFF switch is set to the ON position.

⚠ CAUTION

If there is a malfunction of the passenger's front air bag ON/OFF switch, the passenger's front air bag OFF indicator will not illuminate and the passenger's front air bag will inflate in frontal impact crashes even if the passenger's front air bag ON/OFF switch is set to the OFF position.

If this occurs, have an authorized KIA dealer inspect the passenger's front air bag ON/OFF switch and the SRS air bag system as soon as possible.

D150303AUN



Anti-lock brake system (ABS) warning light (if equipped)

This light illuminates if the ignition switch is turned ON and goes off in approximately 3 seconds if the system is operating normally.

If the ABS warning light remains on or comes on while driving or does not come on when the ignition switch is turned to the ON position, this indicates that there may be a malfunction with the ABS.

If this occurs, have your vehicle checked by an authorized KIA dealer as soon as possible. The normal braking system will still be operational, but without the assistance of the anti-lock brake system.

FarmaSOS.com





Electronic brake force distribution (EBD) system warning light

If two warning lights illuminate at the same time while driving, your vehicle may have a malfunction with the ABS and EBD system.

In this case, your ABS and regular brake system may not work normally. Have the vehicle checked by an authorized KIA dealer as soon as possible.

⚠ WARNING

If the both ABS and brake warning lights are on and stay on, your vehicle's brake system will not work normally during sudden braking. In this case, avoid high speed driving and abrupt braking. Have your vehicle checked by an authorized KIA dealer as soon as possible.

D150304APA

Seat belt warning



Seat belt warning light

Type A

As a reminder to the driver, the seat belt warning light will blink for approximately 6 seconds each time you turn the ignition switch ON regardless of belt fastening.

If the driver's seat belt is unfastened after the ignition switch is ON, the seat belt warning light blinks again for approximately 6 seconds.

Type B

As a reminder to the driver, the driver's seat belt warning light will blink or illuminate for approximately 6 seconds each time you turn the ignition switch ON regardless of belt fastening.

If the driver's seat belt is not fastened when the ignition switch is turned ON or if it is disconnected after the ignition switch is turned ON, the seat belt warning light will blink or illuminate until the belt is fastened.

But, if the driver's seat belt is connected and disconnected twice within 9 seconds after the belt is fastened, the driver's seat belt warning light will not operate.

If the system does not operate as described, see an authorized KIA dealer for assistance.

امداد خودرو فارما
تلفن شبانه روزی: ۰۲۱-۸۸۸۶۲۰۸۵
FarmaSOS.com

Seat belt warning chime (if equipped)

Type A

If the driver's seat belt is not fastened when the ignition switch is turned ON or if it is unfastened after the ignition switch is ON, the seat belt warning chime will sound for approximately 6 seconds. At this time, if the seat belt is fastened, the chime will stop immediately.

Type B

If the driver's seat belt is not fastened when the ignition switch is turned ON and you drive over 9 km/h (6 mph), the seat belt warning chime will sound for approximately 100 seconds after the warning light blinks for approximately 1 minute.

If the driver's seat belt is disconnected after the ignition switch is turned ON and you drive over 9 km/h (6 mph), the seat belt warning chime will sound for approximately 100 seconds.

But, if the driver's seat belt is connected and disconnected twice within 9 seconds after the belt is fastened, the seat belt warning chime will not operate.

D150305ASA

Turn signal indicator

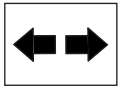

The blinking green arrows on the instrument panel shows the direction indicated by the turn signals. If the arrow comes on but does not blink or blinks more rapidly than normal or does not illuminate at all, it indicates a malfunction in the turn signal system. It should be checked by an authorized KIA dealer.

D150306AUN

High beam indicator

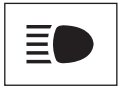

This indicator illuminates when the headlights are on and in the high beam position or when the turn signal lever is pulled into the Flash-to-Pass position.

D150307AUN

Engine oil pressure warning light



This warning light indicates the engine oil pressure is low.

If the warning light illuminates while driving:

1. Drive safely to the side of the road and stop.
2. With the engine off, check the engine oil level. If the level is low, add oil as required.

If the warning light remains on after adding oil or if oil is not available, call an authorized KIA dealer.

⚠ CAUTION

If the engine is not stopped immediately after the engine oil pressure warning light is illuminated, severe damage could result.

⚠ CAUTION

If the oil pressure warning light stays on while the engine is running, serious engine damage may result. The oil pressure warning light comes on whenever there is insufficient oil pressure. In normal operation, it should come on when the ignition switch is turned on, then go out when the engine is started. If the oil pressure warning light stays on while the engine is running, there is a serious malfunction.

If this happens, stop the car as soon as it is safe to do so, turn off the engine and check the oil level. If the oil level is low, fill the engine oil to the proper level and start the engine again. If the light stays on with the engine running, turn the engine off immediately. In any instance where the oil light stays on when the engine is running, the engine should be checked by an authorized KIA dealer before the car is driven again.

تلفن شبانه روزی: ۰۲۱-۸۸۶۲۰۸۵

D150308ASA

Parking brake & brake fluid warning light



Parking brake warning

This light is illuminated when the parking brake is applied with the ignition switch in the START or ON position. The warning light should go off when the parking brake is released.

Low brake fluid level warning

If the warning light remains on, it may indicate that the brake fluid level in the reservoir is low.

If the warning light remains on:

1. Drive carefully to the nearest safe location and stop your vehicle.
2. With the engine stopped, check the brake fluid level immediately and add fluid as required. Then check all brake components for fluid leaks.
3. Do not drive the vehicle if leaks are found, the warning light remains on or the brakes do not operate properly. Have the vehicle towed to any authorized KIA dealer for a brake system inspection and necessary repairs.

To check bulb operation, check whether the parking brake and brake fluid warning light illuminates when the ignition switch is in the ON position.

⚠ WARNING

Driving the vehicle with a warning light on is dangerous. If the brake warning light remains on, have the brakes checked and repaired immediately by an authorized KIA dealer.

FarmaSOS.com

Low brake vacuum pressure warning (diesel engine only)

If the warning light remains on, it may indicate that the brake vacuum pump has a problem. Therefore you should avoid high speed driving or sudden stop, and you should depress the brake pedal deeper and harder than usual when braking. Make sure you have the brake system checked and repaired by an authorized KIA dealer.

⚠ WARNING

- **Continuous braking while driving on steep or long downhill may cause to descend the vacuum level in brake booster for a time and turn on the warning light. In this case, shift down the transaxle. If the warning light illuminate continuously, stop the vehicle in the safe location and wait until the warning light goes off.**
- **Driving the vehicle with a warning light on is dangerous. If the brake warning light remains on, have the brakes checked and repaired immediately by an authorized KIA dealer.**

D150313AUN

Charging system warning light

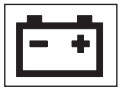

This warning light indicates a malfunction of either the generator or electrical charging system.

If the warning light comes on while the vehicle is in motion:

1. Drive to the nearest safe location.
2. With the engine off, check the generator drive belt for looseness or breakage.
3. If the belt is adjusted properly, a problem exists somewhere in the electrical charging system. Have an authorized KIA dealer correct the problem as soon as possible.

D150315AUN

Tailgate open warning light



This warning light illuminates when the tailgate is not closed securely with the ignition switch in any position.

D150316AUN

Door ajar warning light



This warning light illuminates when a door is not closed securely with the ignition switch in any position.

امداد خودرو فارما
تلفن شبانه روزی: ۰۲۱-۸۸۸۶۲۰۸۵
FarmaSOS.com

D150317ASA

Immobilizer indicator (if equipped)



This light illuminates when the immobilizer key is inserted and turned to the ON position to start the engine.

At this time, you can start the engine. The light will go out after the engine starts running.

If this light blinks when the ignition switch is in the ON position before starting the engine, have the system checked by an authorized KIA dealer.

D150318AUN

Low fuel level warning light



This warning light indicates the fuel tank is nearly empty. When it comes on, you should add fuel as soon as possible. Driving with the fuel level warning light on or with the fuel level below “E” can cause the engine to misfire and damage the catalytic converter.

D150320AUN-EU

Malfunction indicator (MIL) (check engine light) (if equipped)

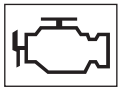

This indicator light is part of the Engine Control System which monitors various emission control system components. If this light illuminates while driving, it indicates that a potential malfunction has been detected somewhere in the emission control system.

This light will also illuminate when the ignition switch is turned to the ON position, and will go out in a few seconds after the engine is started. If it illuminates while driving, or does not illuminate when the ignition switch is turned to the ON position, take your vehicle to your nearest authorized KIA dealer and have the system checked.

Generally, your vehicle will continue to be drivable, but have the system checked by an authorized KIA dealer promptly.

⚠ CAUTION

Prolonged driving with the Emission Control System Malfunction Indicator Light illuminated may cause damage to the emission control systems which could effect drivability and/or fuel economy.

⚠ CAUTION

If the Emission Control System Malfunction Indicator Light illuminates, potential catalytic converter damage is possible which could result in loss of engine power. Have the Engine Control System inspected as soon as possible by an authorized KIA dealer.

FarmaSOS.com

D150323AUN-EE

ESP indicator (Electronic Stability Program) (if equipped)



The ESP indicator will illuminate when the ignition switch is turned ON, but should go off after approximately 3 seconds. When the ESP is on, it monitors the driving conditions and under normal driving conditions, the ESP light will remain off. When a slippery or low traction condition is encountered, the ESP will operate, and the ESP indicator will blink to indicate the ESP is operating.

D150324AUN

ESP OFF indicator (if equipped)



The ESP OFF indicator will illuminate when the ignition switch is turned ON, but should go off after approximately 3 seconds. To switch to ESP OFF mode, press the ESP OFF button. The ESP OFF indicator will illuminate indicating the ESP is deactivated. If this indicator stays on when ESP OFF is not selected, the ESP may have a malfunction. Take your car to an authorized KIA dealer and have the system checked.

D150334ASA

Electric power steering (EPS) system warning light (if equipped)



This light comes on when the ignition switch is turned to the ON position and then it will go out when the engine starts. This light also comes on if the EPS has a malfunction. If it comes on while driving, have your vehicle inspected by an authorized KIA dealer.

Manual transaxle shift indicator (if equipped)



This indicator informs you which gear is desired while driving to save fuel.

For example

▲3: Indicates that shifting up to the 3rd gear is desired. (Currently the shift lever is in the 2nd gear.)

▼3: Indicates that shifting down to the 3rd gear is desired. (Currently the shift lever is in the 4th gear.)

When the system is not working properly, the Up & Down Arrow (indicator) will blink (gear is not displayed).

D150326APA

Lights on warning chime (if equipped)

The lights on warning chime will sound if the driver's door is opened and when the headlight switch is left in the 1st or 2nd position.

D150327AUN

Key reminder warning chime (if equipped)

If the driver's door is opened while the ignition key is left in the ignition switch (ACC or LOCK position), the key reminder warning chime will sound. This is to prevent you from locking your keys in the vehicle. The chime sounds until the key is removed from the ignition switch or the driver's door is closed.

FarmaSOS.com

D150328ASA

Glow indicator (Diesel engine)

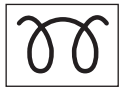

The indicator light illuminates when the ignition switch is placed at the ON position. The engine can be started after the preheat indicator light goes off. The illuminating time varies with the water temperature, air temperature and battery condition.

✻ NOTICE

If the engine does not start within 10 seconds after the preheating is completed, turn the ignition switch once more to the LOCK position for 10 seconds, and then to the ON position, in order to preheat again.

⚠ CAUTION

If the glow indicator light continues to illuminate or blink on and off after the engine has warmed up or while driving, check the system by an authorized KIA dealer as soon as possible.

D150329AUN

Fuel filter warning light (Diesel engine)



This warning light illuminates for 3 seconds after the ignition switch is set to the ON position and then it will go out. If it lights up while the engine is running, it indicates that water has accumulated inside the fuel filter. If this happens, remove the water from the fuel filter. For more information, refer to “Fuel filter” in section 7.

⚠ CAUTION

When the fuel filter warning light is illuminated, engine power (vehicle speed & idle speed) may decrease. If you keep driving with the warning light on, you can damage your vehicle's engine parts and injection system of the Common Rail. If this occurs, have your vehicle checked by an authorized KIA dealer as soon as possible.

D150330ASA

Overspeed warning (if equipped)



Overspeed warning light

If you drive with the speed of 120 km/h or more, the overspeed warning light will blink. This is to prevent you from overspeeding.

امداد خودرو فارما
تلفن شبانه روزی: ۰۲۱-۸۸۸۶۲۰۸۵
FarmaSOS.com

REAR PARKING ASSIST SYSTEM (IF EQUIPPED)

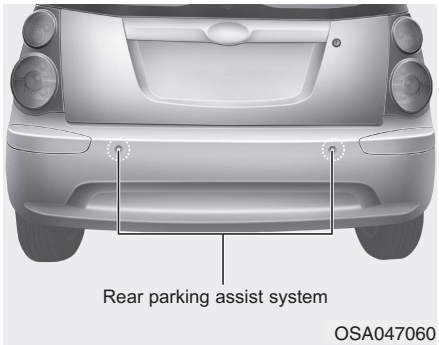

D170000AEN

The rear parking assist system assists the driver during backward movement of the vehicle by chiming if any object is sensed within a distance of 120 cm (47 in.) behind the vehicle. This system is a supplemental system and it is not intended to nor does it replace the need for extreme care and attention of the driver. The sensing range and objects detectable by the back sensors are limited. Whenever backing-up, pay as much attention to what is behind you as you would in a vehicle without a rear parking assist system.

⚠ WARNING

The rear parking assist system is a supplementary function only. The operation of the rear parking assist system can be affected by several factors (including environmental conditions). It is the responsibility of the driver to always check the area behind the vehicle before and while backing up.

Operation of the rear parking assist system

D170101AEN

Operating condition

- This system will activate when backing up with the ignition switch ON.
  If the vehicle is moving at a speed over 5 km/h (3 mph), the system may not be activated correctly.
- The sensing distance while the rear parking assist system is in operation is approximately 120 cm (47 in.).
- When more than two objects are sensed at the same time, the closest one will be recognized first.

تلفن شبانه روزی: ۰۲۱-۸۸۸۶۲۰۸۵

D170102AEN

Types of warning sound

- When an object is 120 cm to 81 cm (47 in. to 32 in.) from the rear bumper: Buzzer beeps intermittently
- When an object is 80 cm to 41 cm (31 in. to 16 in.) from the rear bumper: Buzzer beeps more frequently
- When an object is within 40 cm (15 in.) of the rear bumper:
  Buzzer sounds continuously.

FarnaSms.com

D170200AEN

Non-operational conditions of rear parking assist system

The rear parking assist system may not operate properly when:

1. Moisture is frozen to the sensor. (It will operate normally when the moisture has been cleared.)
2. The sensor is covered with foreign matter, such as snow or water, or the sensor cover is blocked. (It will operate normally when the material is removed or the sensor is no longer blocked.)
3. Driving on uneven road surfaces (unpaved roads, gravel, bumps, gradient).
4. Objects generating excessive noise (vehicle horns, loud motorcycle engines, or truck air brakes) are within range of the sensor.
5. Heavy rain or water spray exists.
6. Wireless transmitters or mobile phones are within range of the sensor.
7. The sensor is covered with snow.
8. Trailer towing.

The detecting range may decrease when:

1. The sensor is stained with foreign matter such as snow or water. (The sensing range will return to normal when removed.)
2. Outside air temperature is extremely hot or cold.

The following objects may not be recognized by the sensor:

1. Sharp or slim objects such as ropes, chains or small poles.
2. Objects which tend to absorb the sensor frequency such as clothes, spongy material or snow.
3. Undetectable objects smaller than 1 m (40 in.) and narrower than 14 cm (6 in.) in diameter.

D170300AEN

Rear parking assist system precautions

- The rear parking assist system may not sound sequentially depending on the speed and shapes of the objects detected.
- The rear parking assist system may malfunction if the vehicle bumper height or sensor installation has been modified or damaged. Any non-factory installed equipment or accessories may also interfere with the sensor performance.
- The sensor may not recognize objects less than 40 cm (15 in.) from the sensor, or it may sense an incorrect distance. Use caution.
- When the sensor is frozen or stained with snow, dirt, or water, the sensor may be inoperative until the stains are removed using a soft cloth.
- Do not push, scratch or strike the sensor. Sensor damage could occur.

✻ NOTICE

This system can only sense objects within the range and location of the sensors; It can not detect objects in other areas where sensors are not installed. Also, small or slim objects, such as poles or objects located between sensors may not be detected by the sensors.
Always visually check behind the vehicle when backing up.
Be sure to inform any drivers of the vehicle that may be unfamiliar with the system regarding the systems capabilities and limitations.

⚠ WARNING

Pay close attention when the vehicle is driven close to objects on the road, particularly pedestrians, and especially children. Be aware that some objects may not be detected by the sensors, due to the object's distance, size or material, all of which can limit the effectiveness of the sensor. Always perform a visual inspection to make sure the vehicle is clear of all obstructions before moving the vehicle in any direction.

FamaSoft.com

D170400BUN

Self-diagnosis

If you don't hear an audible warning sound or if the buzzer sounds intermittently when shifting the gear to the R (Reverse) position, this may indicate a malfunction in the rear parking assist system. If this occurs, have your vehicle checked by an authorized KIA dealer as soon as possible.

⚠ WARNING

Your new vehicle warranty does not cover any accidents or damage to the vehicle or its occupants due to a rear parking assist system malfunction. Always drive safely and cautiously.

HAZARD WARNING FLASHER

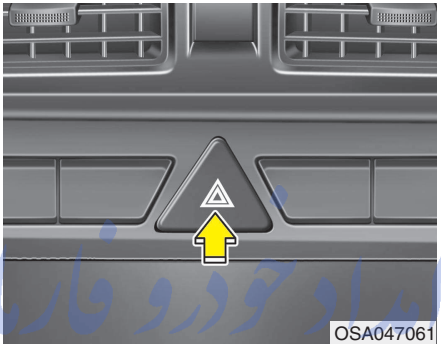

D180000AUN

The hazard warning flasher should be used whenever you find it necessary to stop the car in a hazardous location. When you must make such an emergency stop, always pull off the road as far as possible.

The hazard warning lights are turned on by pushing in the hazard switch. This causes all turn signal lights to blink. The hazard warning lights will operate even though the key is not in the ignition switch.

To turn the hazard warning lights off, push the switch a second time.

LIGHTING

D190100AUN

Battery saver function (if equipped)

- The purpose of this feature is to prevent the battery from being discharged. The system automatically turns off the exterior lights when the driver removes the ignition key and opens the driver-side door.
- With this feature, the parking lights will be turned off automatically if the driver parks on the side of road at night.

  If necessary, to keep the lights on when the ignition key is removed, perform the following:

  1) Open the driver-side door.
  2) Turn the parking lights OFF and ON again using the light switch on the steering column.

ایران خودرو فارس
FarnaSys.com

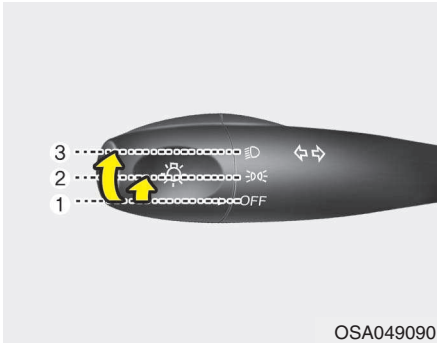

OSA049090

D190400ASA

Lighting control

The light switch has a Headlight and a Parking light position.

To operate the lights, turn the knob at the end of the control lever to one of the following positions:

(1) OFF position
(2) Parking light position
(3) Headlight position



OSA049091

D190401AEN

Parking light position ( )

When the light switch is in the parking light position (1st position), the tail, license and instrument panel lights are ON.

FarmaSOS.com



OSA049092

D190402AEN

Headlight position ( )

When the light switch is in the headlight position (2nd position) the head, tail, license and instrument panel lights are ON.

✻ NOTICE

The ignition switch must be in the ON position to turn on the headlights.



OSA049093

D190500AUN

High beam operation

To turn on the high beam headlights, push the lever away from you. Pull it back for low beams.

The high beam indicator will light when the headlight high beams are switched on.

To prevent the battery from being discharged, do not leave the lights on for a prolonged time while the engine is not running.



OSA049094

To flash the headlights, pull the lever towards you. It will return to the normal (low beam) position when released. The headlight switch does not need to be on to use this flashing feature.

امداد خودرو فارما
FarmaSOS.com

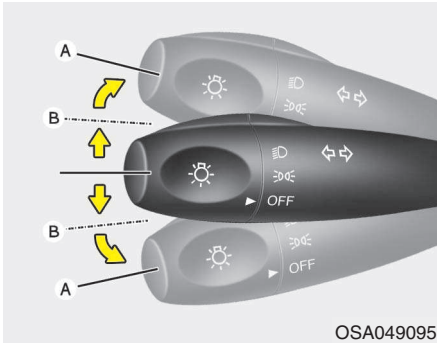

OSA049095

D190600AUN

Turn signals and lane change signals

The ignition switch must be on for the turn signals to function. To turn on the turn signals, move the lever up or down (A). Green arrow indicators on the instrument panel indicate which turn signal is operating. They will self-cancel after a turn is completed. If the indicator continues to flash after a turn, manually return the lever to the OFF position.

To signal a lane change, move the turn signal lever slightly and hold it in position (B). The lever will return to the OFF position when released.

If an indicator stays on and does not flash or if it flashes abnormally, one of the turn signal bulbs may be burned out and will require replacement.

✻ NOTICE

If an indicator flash is abnormally quick or slow, a bulb may be burned out or have a poor electrical connection in the circuit.

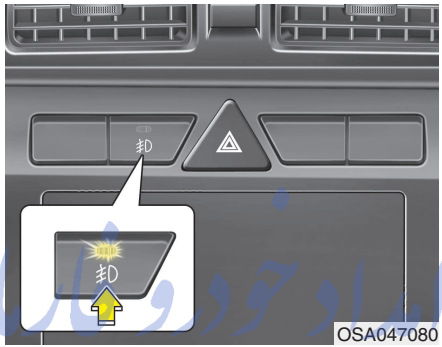

D190700ASA

Front fog light (if equipped)

Fog lights are used to provide improved visibility when visibility is poor due to fog, rain or snow, etc. The fog lights will turn on when the fog light button is pressed after the ignition switch is in the ON position and the parklight is turned on.

To turn off the fog lights, press the button again.

⚠ CAUTION

When in operation, the fog lights consume large amounts of vehicle electrical power. Only use the fog lights when visibility is poor.



D190800ASA

Rear fog light (if equipped)

To turn the rear fog lights on, turn the headlight switch to the headlight on position and press the rear fog light button (the light will illuminate).

Also, the rear fog lights turn on when the rear fog button is pressed after the front fog button is turned ON and the headlight switch to the parklight position. (if equipped)

To turn the rear fog lights off, press the rear fog light button again or turn the headlight switch to the OFF position.

✻ NOTICE

When you turn off the rear fog light by turning the headlight switch to the off position, be sure to turn the rear fog light button off too by pressing the button again. The chime may sound when you open the door if the rear fog light button is on, even though the rear fog light is off.

D190900AUN

Daytime running light (if equipped)

Daytime Running Lights (DRL) can make it easier for others to see the front of your vehicle during the day. DRL can be helpful in many different driving conditions, and it is especially helpful after dawn and before sunset.

The DRL system will make the headlights turn OFF when:

1. The parklight switch is ON.
2. Engine stops.

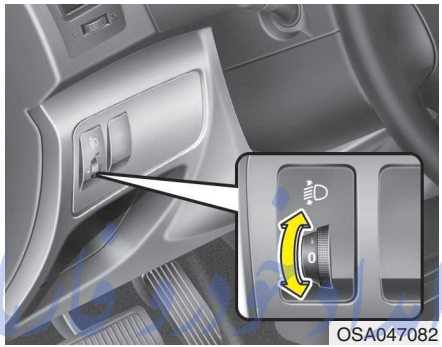

OSA047082

D191001ASA

Headlight leveling device (if equipped)

To adjust the headlight beam level according to the number of the passengers and the loading weight in the luggage area, turn the beam leveling switch. The higher the number of the switch position, the lower the headlight beam level. Always keep the headlight beam at the proper leveling position, or headlights may dazzle other road users.

Listed below are the examples of proper switch settings. For loading conditions other than those listed below, adjust the switch position so that the beam level may be the nearest as the condition obtained according to the list.

Switch setting:

Position	Loading on		
	Front seats	Rear seats	Rear luggage room
0	1 driver	-	-
	2 persons	-	-
1	2 persons	3 persons	-
2	2 persons	3 persons	55 kg
3	1 driver	-	320 kg

WIPERS AND WASHERS

Windshield wiper/washer

Type A

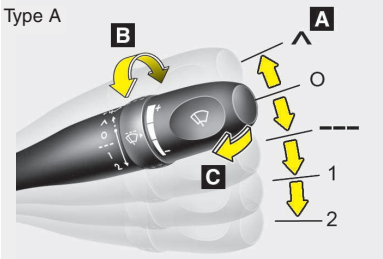

Type B

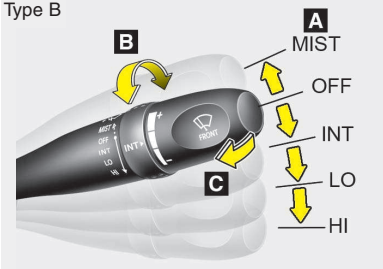

Rear window wiper/washer (if equipped)

Type A

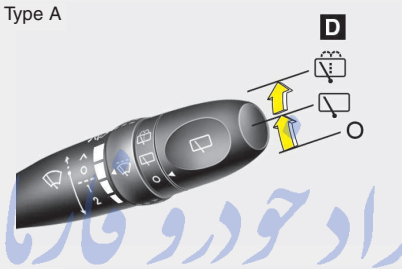

Type B

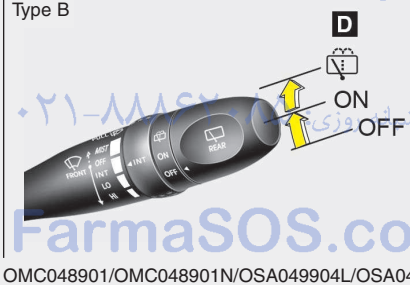

OMC048901/OMC048901N/OSA049904L/OSA049904

A : Wiper speed control

- MIST ( ) – Single wipe
- OFF (O) – Off
- INT (---) – Intermittent wipe
- LO (1) – Low wiper speed
- HI (2) – High wiper speed

B : Intermittent wipe time adjustment

C : Wash with brief wipes

D : Rear wiper/washer control

- – Wash with brief wipes
- ON ( ) – Continuous wipe
- OFF (O) – Off

امداد خودرو فارما
۰۲۱-۸۸۸۶۰۰۰۰ تلفن شبانه روزی
FarmaSOS.com

Type A

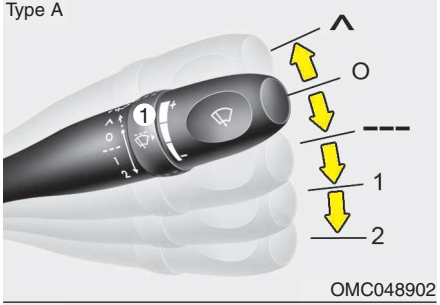

OMC048902

Type B



OMC048902N

D200100BSA

Windshield wipers

Operates as follows when the ignition switch is turned ON.

MIST ( ) : For a single wiping cycle, push the lever upward and release it with the lever in the OFF (O) position. The wipers will operate continuously if the lever is pushed upward and held.

OFF (O) : Wiper is not in operation

INT (---) : Wiper operates intermittently at the same wiping intervals. Use this mode in light rain or mist. To vary the speed setting, turn the speed control knob(1).

LO (1) : Normal wiper speed

HI (2) : Fast wiper speed

تلفن شبانه روزی: ۰۲۱-۸۸۸۶۲۰۸۵

✻ NOTICE

If there is heavy accumulation of snow or ice on the windshield, defrost the windshield for about 10 minutes, or until the snow and/or ice is removed before using the windshield wipers to ensure proper operation.

Fanasos.com

Type A

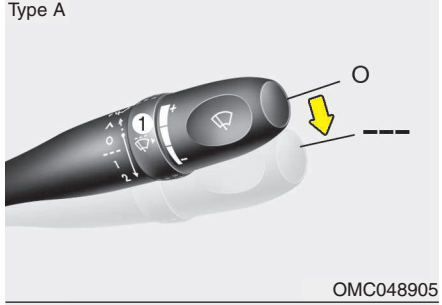

OMC048905

Type B

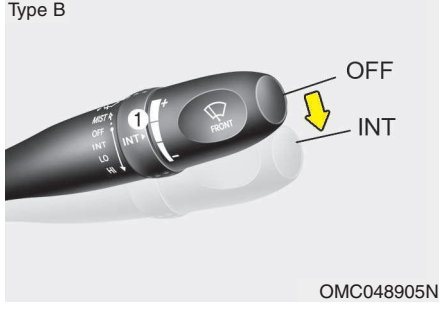

OMC048905N

D200102BSA

Variable intermittent wipers

Set the lever to the INT (---) position and choose the desired wiper interval by turning the ring(1).

Type A

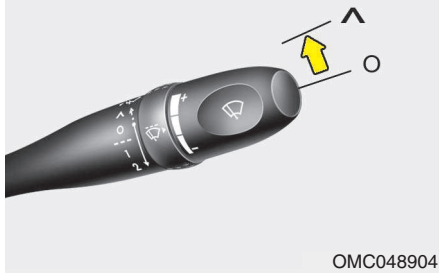

OMC048904

Type B

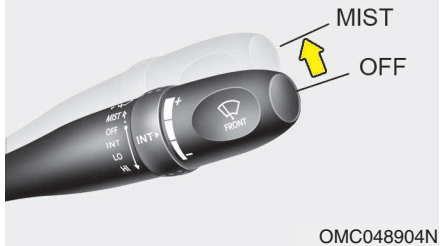

OMC048904N

D200103BSA

One - touch wiper

For a single wiping cycle, push the lever upward and release it with the lever in the OFF (O) position.

The wipers will operate continuously if the lever is pushed upward and held.

✻ NOTICE

- **To prevent possible damage to the wipers or windshield, do not operate the wipers when the windshield is dry.**
- **To prevent damage to the wiper blades, do not use gasoline, kerosene, paint thinner, or other solvents on or near them.**
- **To prevent damage to the wiper arms and other components, do not attempt to move the wipers manually.**

امداد خودرو فارما
تلفن شبانه روزی: ۰۲۱-۸۸۸۶۲۰۸۵
FarmaSOS.com

Type A

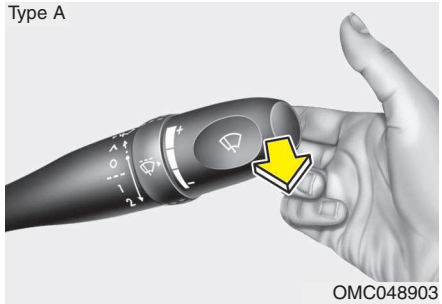

OMC048903

Type B

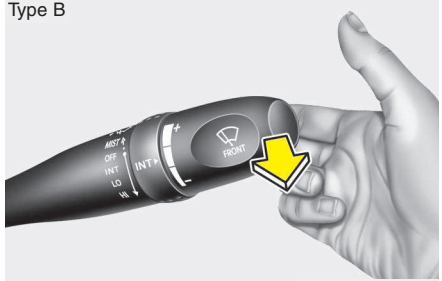

OMC048903N

D200200BSA

Windshield washers

In the OFF (O) position, pull the lever gently toward you to spray washer fluid on the windshield and to run the wipers 1-3 cycles.

Use this function when the windshield is dirty.

The spray and wiper operation will continue until you release the lever.

If the washer does not work, check the washer fluid level. If the fluid level is not sufficient, you will need to add appropriate non-abrasive windshield washer fluid to the washer reservoir.

The reservoir filler neck is located in the front of the engine compartment on the passenger side.

⚠ CAUTION

To prevent possible damage to the washer pump, do not operate the washer when the fluid reservoir is empty.

⚠ WARNING

Do not use the washer in freezing temperatures without first warming the windshield with the defrosters; the washer solution could freeze on the windshield and obscure your vision.

⚠ CAUTION

- ***To prevent possible damage to the wipers or windshield, do not operate the wipers when the windshield is dry.***
- ***To prevent damage to the wiper blades, do not use gasoline, kerosene, paint thinner, or other solvents on or near them.***
- ***To prevent damage to the wiper arms and other components, do not attempt to move the wipers manually.***

Type A

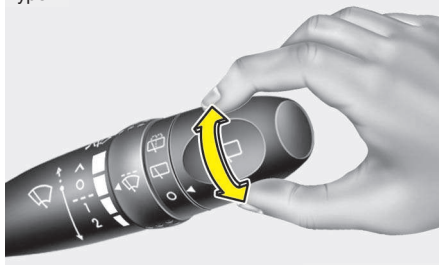

OSA049905L

Type B

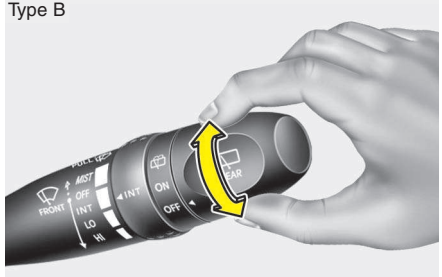

OSA049905

D200300BPA

Rear window wiper and washer switch (if equipped)

The rear window wiper and washer switch is located at the end of the wiper and washer switch lever. Turn the switch to desired position to operate the rear wiper and washer.

- Spraying washer fluid and wiping

ON ( ) - Normal wiper operation

OFF (O) - Wiper is not in operation

INTERIOR LIGHT

D210000AEN

⚠ CAUTION

Do not use the interior lights for extended periods when the engine is not running.

It may cause battery discharge.

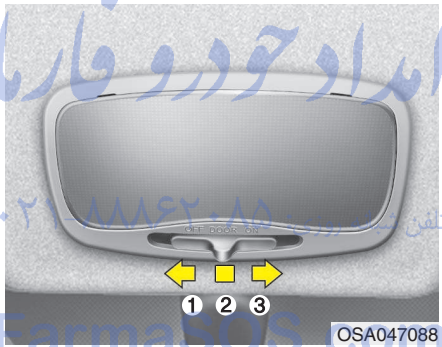

OSA047088

D210200ASA

Room lamp

(1) OFF - The light stays off even when a door is open.

(2) DOOR - The light turns on or off when a door is opened or closed.

(3) ON - The light turns on and stays on even when the doors are all closed.

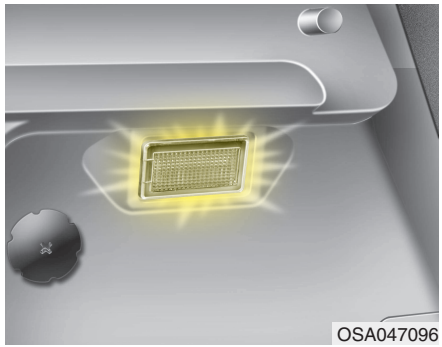

OSA047096

D210300APA

Luggage lamp (if equipped)

The light comes on when the tailgate is opened.

ایراد خودرو فارما
FarmaSOS.com

DEFROSTER

D220000AUN

⚠ CAUTION

To prevent damage to the conductors bonded to the inside surface of the rear window, never use sharp instruments or window cleaners containing abrasives to clean the window.

✻ NOTICE

If you want to defrost and defog the front windshield, refer to "Windshield defrosting and defogging" in this section.

D220101AUN

Outside mirror defroster (if equipped)

If your vehicle is equipped with outside mirror defrosters, they will operate at the same time when you turn on the rear window defroster.

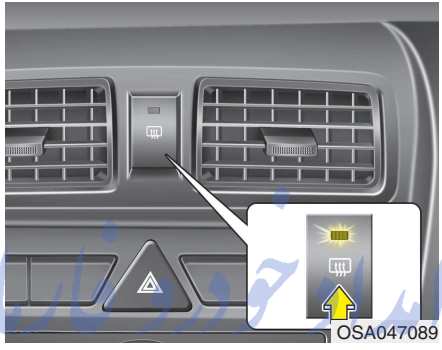
OSA047089

D220100ASA

Rear window defroster

The defroster heats the window to remove frost, fog and thin ice from the rear window, while the engine is running.

To activate the rear window defroster, press the rear window defroster button. The indicator on the rear window defroster button illuminates when the defroster is ON.

If there is heavy accumulation of snow on the rear window, brush it off before operating the rear defroster.

To turn off the defroster, press the rear window defroster button again.

FarmaCOS.com

MANUAL CLIMATE CONTROL SYSTEM (IF EQUIPPED)

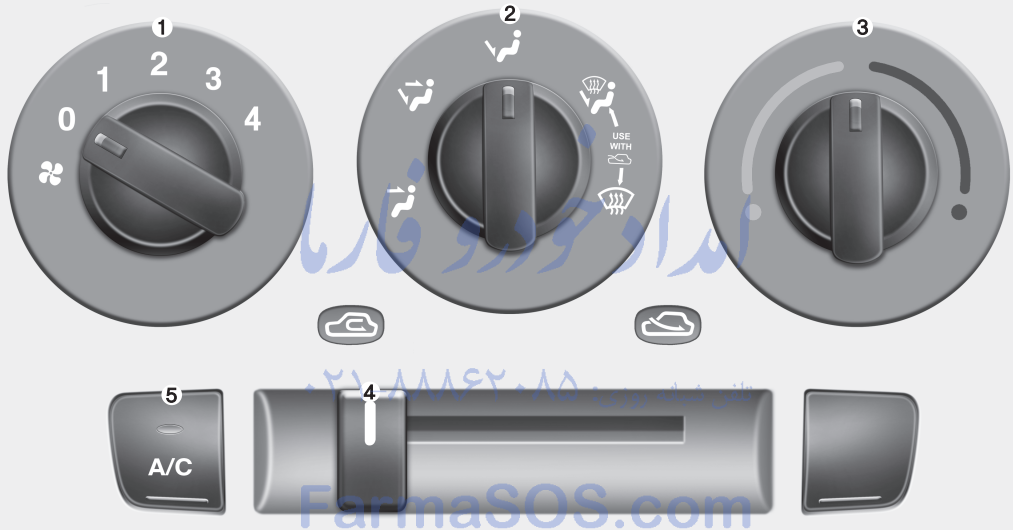

FarmaSOS.com

1. Fan speed control knob
2. Mode selection knob
3. Temperature control knob
4. Air intake control lever
5. Air conditioning button*

* : if equipped

OSA047100

D230000ASA

D230100AEN

Heating and air conditioning

1. Start the engine.
2. Set the mode to the desired position.
   To improve the effectiveness of heating and cooling;
   - Heating:
   - Cooling:
3. Set the temperature control to the desired position.
4. Set the air intake control to the outside (fresh) air position.
5. Set the fan speed control to the desired speed.
6. If air conditioning is desired, turn the air conditioning system (if equipped) on.

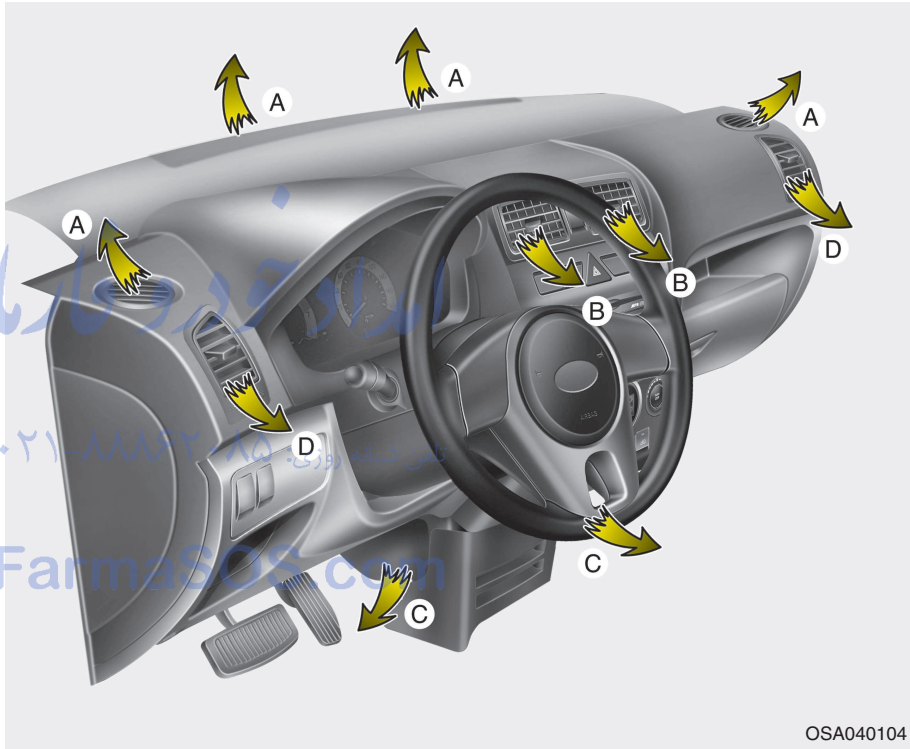

OSA040104

FarmaSOS.com

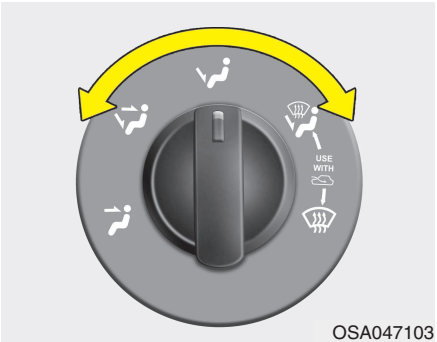

OSA047103

D230101APA

Mode selection

The mode selection knob controls the direction of the air flow through the ventilation system.

Air can be directed to the floor, dashboard outlets, or windshield. Five symbols are used to represent Face, Bi-Level, Floor, Floor-Defrost and Defrost air position.

Face-Level (B, D)

Air flow is directed toward the upper body and face. Additionally, each outlet can be controlled to direct the air discharged from the outlet.

Bi-Level (B, D, C)

Air flow is directed towards the face and the floor.

Floor-Level (C, A, D)

Most of the air flow is directed to the floor, with a small amount of the air being directed to the windshield and side window defrosters.

Floor/Defrost-Level (A, C, D)

Most of the air flow is directed to the floor and the windshield with a small amount directed to the side window defrosters.

Defrost-Level (A, D)

Most of the air flow is directed to the windshield with a small amount of air directed to the side window defrosters.

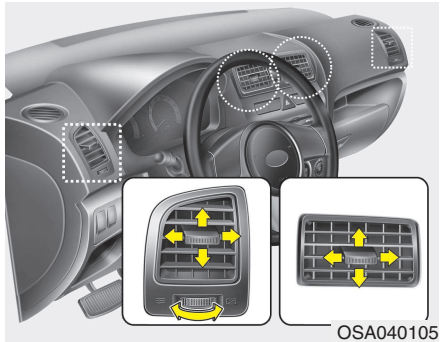

OSA040105

Instrument panel vents

The outlet vents can be opened or closed separately using the thumbwheel.

Also, you can adjust the direction of air delivery from these vents using the vent control lever as shown.

FarmaSOS.com

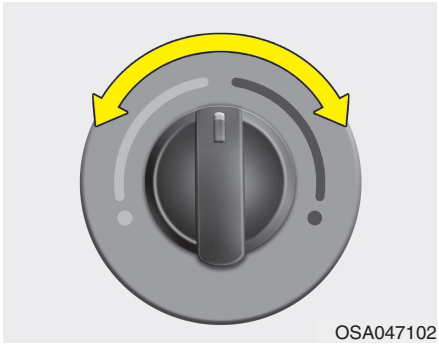

D230102AUN

Temperature control

The temperature control knob allows you to control the temperature of the air flow from the ventilation system. To change the air temperature in the passenger compartment, turn the knob to the right position for warm air or left position for cooler air.

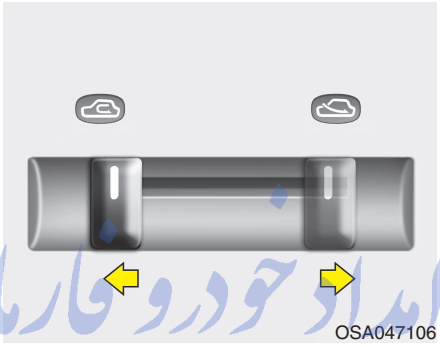

D230103ASA

Air intake control

This is used to select the outside (fresh) air position or recirculated air position.

To change the air intake control position, move the control lever.

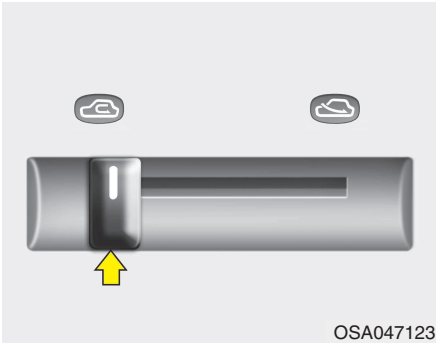

Recirculated air position

With the recirculated air position selected, air from the passenger compartment will be drawn through the heating system and is heated or cooled according to the function selected.

FarmaSOS.com

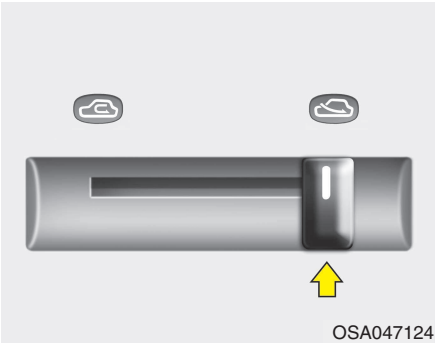
OSA047124

Outside (fresh) air position

With the outside (fresh) air position selected, air enters the vehicle from outside and is heated or cooled according to the function selected.

✻ NOTICE

Prolonged operation of the heater in the recirculated air position (without air conditioning selected) may cause fogging of the windshield and side windows and the air within the passenger compartment may become stale.

In addition, prolonged use of the air conditioning with the recirculated air position selected will result in excessively dry air in the passenger compartment.

⚠ WARNING

- **Continue using the climate control system in the recirculated air position may allow humidity to increase inside the vehicle which may fog the glass and obscure visibility.**
- **Do not sleep in a vehicle with the air conditioning or heating system on. It may cause serious harm or death due to a drop in the oxygen level and/or body temperature.**
- **Continue using the climate control system in the recirculated air position can cause drowsiness or sleepiness, and loss of vehicle control. Set the air intake control to the outside (fresh) air position as much as possible while driving.**

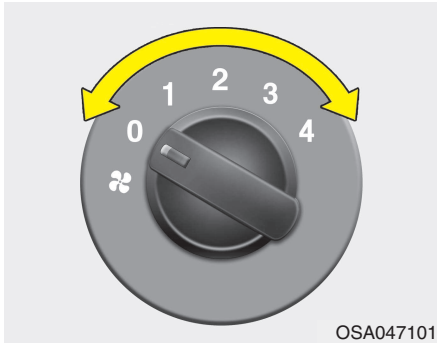

OSA047101

D230104ASA

Fan speed control

The ignition switch must be in the ON position for fan operation.

The fan speed control knob allows you to control the fan speed of the air flow from the ventilation system. To change the fan speed, turn the knob to the right for higher speed or left for lower speed.

0 - Fan off
1 - Low speed
2 - Medium speed
3 - High speed
4 - Maximum speed

FarmaSOS.com



OSA047107

D230105AUN

Air conditioning (if equipped)

Push the A/C button to turn the air conditioning system on (indicator light will illuminate). Push the button again to turn the air conditioning system off.

System operation

D230501AUN

Ventilation

1. Set the mode to the position.
2. Set the air intake control to the outside (fresh) air position.
3. Set the temperature control to the desired position.
4. Set the fan speed control to the desired speed.

D230502AEN

Heating

1. Set the mode to the position.
2. Set the air intake control to the outside (fresh) air position.
3. Set the temperature control to the desired position.
4. Set the fan speed control to the desired speed.
5. If dehumidified heating is desired, turn the air conditioning system (if equipped) on.

- If the windshield fogs up, set the mode to the or position.

امداد خودرو فارما
تلفن شبانه روزی: ۰۲۱-۸۸۸۴۰۸۵
FarmaSOS.com

Operation Tips

- To keep dust or unpleasant fumes from entering the car through the ventilation system, temporarily set the air intake control to the recirculated air position. Be sure to return the control to the fresh air position when the irritation has passed to keep fresh air in the vehicle. This will help keep the driver alert and comfortable.
- Air for the heating/cooling system is drawn in through the grilles just ahead of the windshield. Care should be taken that these are not blocked by leaves, snow, ice or other obstructions.
- To prevent interior fog on the windshield, set the air intake control to the fresh air position and fan speed to the desired position, turn on the air conditioning system, and adjust the temperature control to desired temperature.

D230503ASA

Air conditioning (if equipped)

All KIA Air Conditioning Systems are filled with environmentally friendly R-134a refrigerant which does not damage the ozone layer.

1. Start the engine. Push the air conditioning button.
2. Set the mode to the position.
3. Set the air intake control to the outside air or recirculated air position.
4. Adjust the fan speed control and temperature control to maintain maximum comfort.

- When maximum cooling is desired, set the temperature control to the extreme left position, set the air intake control to the recirculated air position, then set the fan speed control to the highest speed.

✻ NOTICE

- **When using the air conditioning system, monitor the temperature gauge closely while driving up hills or in heavy traffic when outside temperatures are high. Air conditioning system operation may cause engine overheating. Continue to use the blower fan but turn the air conditioning system off if the temperature gauge indicates engine overheating.**
- **When opening the windows in humid weather air conditioning may create water droplets inside the vehicle. Since excessive water droplets may cause damage to electrical equipment, air conditioning should only be run with the windows closed.**

Air conditioning system operation tips

- If the vehicle has been parked in direct sunlight during hot weather, open the windows for a short time to let the hot air inside the vehicle escape.
- To help reduce moisture inside of the windows on rainy or humid days, decrease the humidity inside the vehicle by operating the air conditioning system.
- During air conditioning system operation, you may occasionally notice a slight change in engine speed as the air conditioning compressor cycles. This is a normal system operation characteristic.
- Use the air conditioning system every month only for a few minutes to ensure maximum system performance.
- When using the air conditioning system, you may notice clear water dripping (or even puddling) on the ground under the passenger side of the vehicle. This is a normal system operation characteristic.
- Operating the air conditioning system in the recirculated air position provides maximum cooling, however, continual operation in this mode may cause the air inside the vehicle to become stale.
- During cooling operation, you may occasionally notice a misty air flow because of rapid cooling and humid air intake. This is a normal system operation characteristics.

FarmaSoft.com

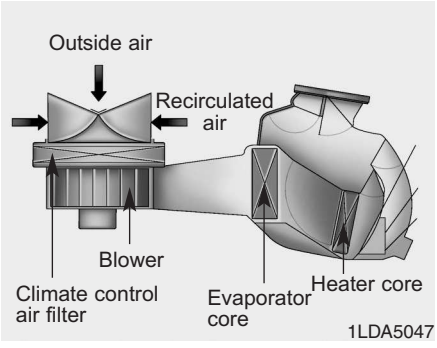

Climate control air filter (if equipped)

The climate control air filter installed behind the glove box filters the dust or other pollutants that come into the vehicle from the outside through the heating and air conditioning system. If dust or other pollutants accumulate in the filter over a period of time, the air flow from the air vents may decrease, resulting in moisture accumulation on the inside of the windshield even when the outside (fresh) air position is selected. If this happens, have the climate control air filter replaced by an authorized KIA dealer.

✻ NOTICE

- **Replace the filter according to the Maintenance Schedule.**
  If the vehicle is being driven in severe conditions such as dusty, rough roads, more frequent climate control air filter inspections and changes are required.
- **When the air flow rate suddenly decreases, the system should be checked by an authorized KIA dealer.**

امداد خودرو فارما
تلفن شبانه روزی: ۰۲۱-۸۸۸۶۲۰۸۵
FarmaSOS.com

D230400AUN

Checking the amount of air conditioner refrigerant and compressor lubricant

When the amount of refrigerant is low, the performance of the air conditioning is reduced. Overfilling also has a negative impact on the air conditioning system.

Therefore, if abnormal operation is found, have the system inspected by an authorized KIA dealer.

✻ NOTICE

It is important that the correct type and amount of oil and refrigerant is used. Otherwise, damage to the compressor and abnormal system operation may occur.

⚠ WARNING

The air conditioning system should be serviced by an authorized KIA dealer. Improper service may cause serious injury to the person performing the service.

AUTOMATIC CLIMATE CONTROL SYSTEM (IF EQUIPPED)

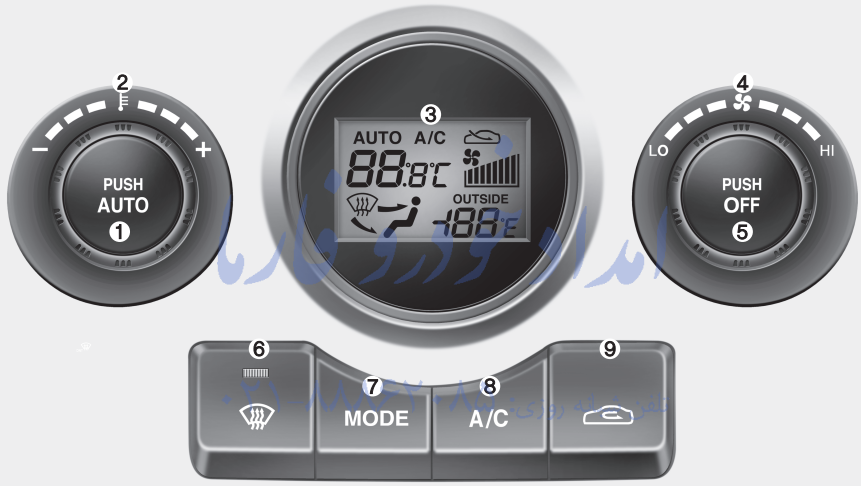

FarmaSOS.com

1. AUTO (automatic control) button
2. Temperature control knob
3. Climate control display
4. Fan speed control knob
5. OFF button
6. Front windshield defrost button
7. Mode selection button
8. Air conditioning button
9. Air intake control button

OSA040108

D240000ASA



OSA047109

D240100BUN

Automatic heating and air conditioning

The automatic climate control system is controlled by simply setting the desired temperature.

The Full Automatic Temperature Control (FATC) system automatically controls the heating and cooling system as follows;

1. Push the AUTO button. It is indicated by AUTO on the display. The modes, fan speeds, air intake and air-conditioning will be controlled automatically by temperature setting.
2. Turn the TEMP knob to set the desired temperature.
   If the temperature is set to the lowest setting (Lo), the air conditioning system will operate continuously.
3. To turn the automatic operation off, press any button or turn any knob except the temperature control knob. If you press the mode selection button, air conditioning button, defrost button or air intake control button, or turn the fan speed knob, the selected function will be controlled manually while other functions operate automatically.

تلفن شبانه روزی: ۰۲۱-۸۸۸۶۲۰۸۵
FarmaSOS.com

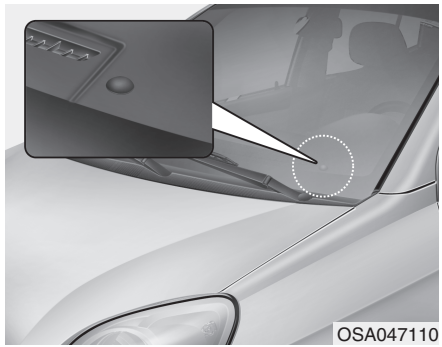
OSA047110

✻ NOTICE

Never place anything over the sensor located on the instrument panel to ensure better control of the heating and cooling system.

D240200AUN

Manual heating and air conditioning

The heating and cooling system can be controlled manually by pushing buttons other than the AUTO button. In this case, the system works sequentially according to the order of buttons selected.

When pressing any button (or turning any knob) except AUTO button while automatic operation, the functions not selected will be controlled automatically.

1. Start the engine.
2. Set the mode to the desired position.
3. Set the temperature control to the desired position.
4. Set the air intake control to the outside (fresh) air position.
5. Set the fan speed control to the desired speed.
6. If air conditioning is desired, turn the air conditioning system on.

Press the AUTO button in order to convert to full automatic control of the system.



OSA040114

D240201AUN

Mode selection

The mode selection button controls the direction of the air flow through the ventilation system.

The air flow outlet port is converted as follows:



Refer to the illustration in the “Manual climate control system”.

Face-Level (B, D)

Air flow is directed toward the upper body and face. Additionally, each outlet can be controlled to direct the air discharged from the outlet.

Bi-Level (B, D, C)

Air flow is directed towards the face and the floor.

FarmaSOS.com



Floor-Level (C, A, D)

Most of the air flow is directed to the floor, with a small amount of the air being directed to the windshield and side window defrosters.



Floor/Defrost-Level (A, C, D)

Most of the air flow is directed to the floor and the windshield with a small amount directed to the side window defrosters.



OSA040115

Defrost-Level (A, D)

Most of the air flow is directed to the windshield with a small amount of air directed to the side window defrosters.

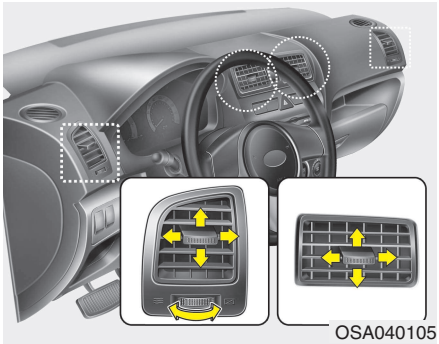

OSA040105

Instrument panel vents

The outlet vents can be opened or closed separately using the thumbwheel.

Also, you can adjust the direction of air delivery from these vents using the vent control lever as shown.

امداد خودرو فارما
تلفن شبانه روزی: ۰۲۱-۸۸۸۶۱۰۸۵
FarmaSOS.com

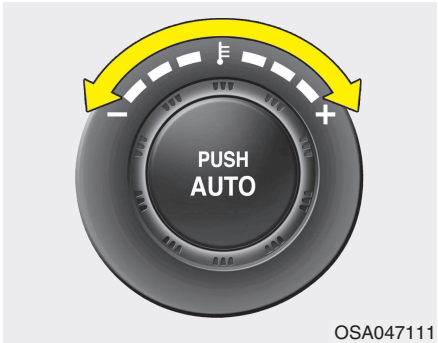

D240202AUN

Temperature control

The temperature will increase to the maximum (HI) by turning the knob to the right extremely.

The temperature will decrease to the minimum (Lo) by turning the knob to the left extremely.

When turning the knob, the temperature will increase or decrease by 0.5°C/1°F. When set to the lowest temperature setting, the air conditioning will operate continuously.

Temperature conversion

If the battery has been discharged or disconnected, the temperature mode display will reset to Centigrade.

This is a normal condition. You can switch the temperature mode between Centigrade to Fahrenheit as follows;

While depressing the AUTO button, depress the OFF button for 3 seconds or more. The display will change from Centigrade to Fahrenheit, or from Fahrenheit to Centigrade.

امداد خودرو ۰۲۱-۸۸۸۶۲۰۸۵ تلفن شبانه روزی:
FarmaSOS.com



D240207AUN

Outside thermometer

The current outside temperature is displayed in 1°C (1°F) increments. The temperature range is between -40°C ~ 60°C (-40°F~140°F).

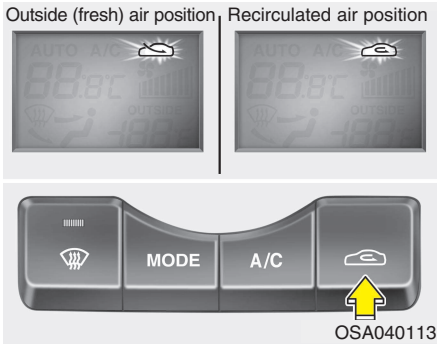

D240203ASA

Air intake control

This is used to select outside (fresh) air position or recirculated air position.

To change the air intake control position, push the control button.

Recirculated air position



The recirculated air position indicator in the climate control display illuminates when the recirculated air position is selected.

With the recirculated air position selected, air from the passenger compartment will be drawn through the heating system and heated or cooled according to the function selected.

Outside (fresh) air position

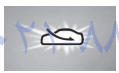

The outside (fresh) air position indicator in the climate control display illuminates when the outside (fresh) air position is selected.

With the outside (fresh) air position selected, air enters the vehicle from outside and is heated or cooled according to the function selected.

✻ NOTICE

Prolonged operation of the heater in the recirculated air position (without air conditioning selected) may cause fogging of the windshield and side windows and the air within the passenger compartment may become stale.
In addition, prolonged use of the air conditioning with the recirculated air position selected will result in excessively dry air in the passenger compartment.

⚠ WARNING

- **Continue using the climate control system in the recirculated air position may allow humidity to increase inside the vehicle which may fog the glass and obscure visibility.**
- **Do not sleep in a vehicle with air conditioning or heating system on. It may cause serious harm or death due to a drop in the oxygen level and/or body temperature.**
- **Continue using the climate control system in the reciruclated air position can cause drowsiness or sleepiness, and loss of vehicle control. Set the air intake control to the outside (fresh) air position as much as possible while driving.**

FarmaSOS.com

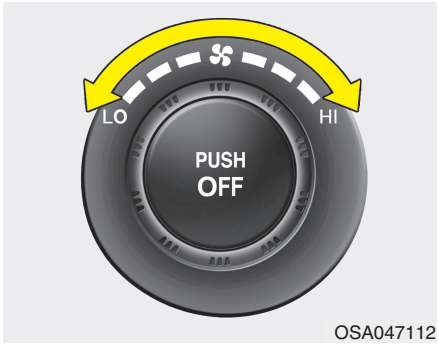

D240205AUN

Fan speed control

The fan speed can be set to the desired speed by turning the fan speed control knob.

The higher the fan speed is, the more air is delivered.

Pressing the OFF button turns off the fan.

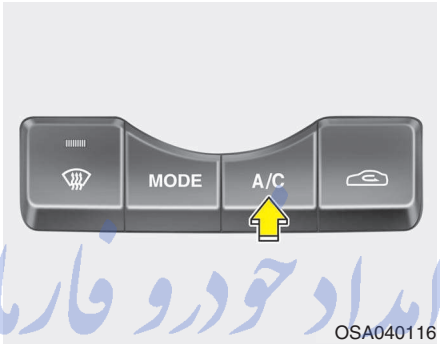

D240206ASA

Air conditioning

Push the A/C button to turn the air conditioning system on.

Push the button again to turn the air conditioning system off.



D240208AUN

OFF mode

Push the OFF button to turn off the air climate control system. However, you can still operate the mode and air intake buttons as long as the ignition switch is in the ON position.

امداد خودرو فارما
تلفن شبانه روزی: ۰۲۱۸۸۴۲۰۸۵
FarmaSOS.com

WINDSHIELD DEFROSTING AND DEFOGGING

D250000AEN

⚠ WARNING - Windshield heating

Do not use the or position during cooling operation in extremely humid weather. The difference between the temperature of the outside air and that of the windshield could cause the outer surface of the windshield to fog up, causing loss of visibility. In this case, set the mode selection knob or button to the position and fan speed control knob or button to the lower speed.

- For maximum defrosting, set the temperature control to the extreme right/hot position and the fan speed control to the highest speed.
- If warm air to the floor is desired while defrosting or defogging, set the mode to the floor-defrost position.
- Before driving, clear all snow and ice from the windshield, rear window, outside rear view mirrors, and all side windows.
- Clear all snow and ice from the hood and air inlet in the cowl grill to improve heater and defroster efficiency and to reduce the probability of fogging up the inside of the windshield.

تلفن شبانه روزی: ۰۲۱-۸۸۸۶۲۰۸۵
FarmaSOS.com

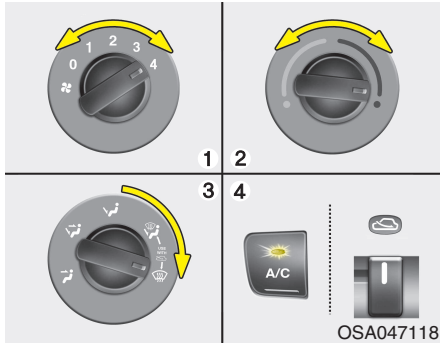

Manual climate control system

D250101ASA

To defog inside windshield

1. Select any fan speed except “0”.
2. Select desired temperature.
3. Select the or position.
4. Turn on the air-conditioning system.
5. Select the outside (fresh) air mode.

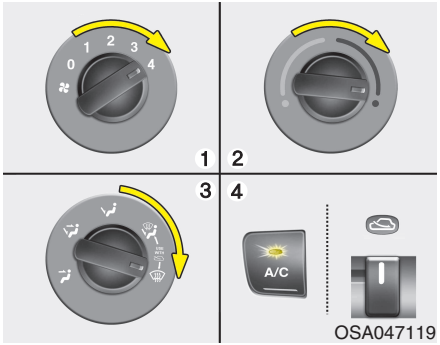

D250102ASA

To defrost outside windshield

1. Set the fan speed to the “3” or “4” position.
2. Set the temperature to the extreme hot position.
3. Select the position.
4. Turn on the air-conditioning system.
5. Select the outside (fresh) air mode.

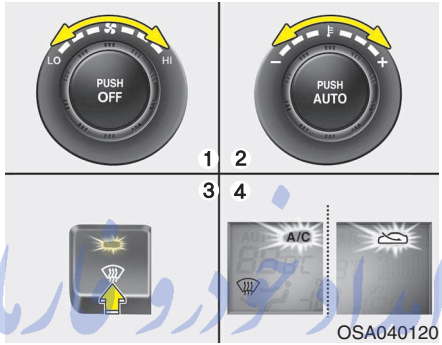

Automatic climate control system

D250201ASA

To defog inside windshield

1. Set the fan speed to the desired position.
2. Select desired temperature.
3. Select the or position.
4. The air conditioning will be turned on according to the detected ambient temperature and outside (fresh) air position will be selected automatically.

If the air conditioning and outside (fresh) air position are not selected automatically, adjust the corresponding button manually. If the position is selected, lower fan speed is automatically controlled to a more higher fan speed.

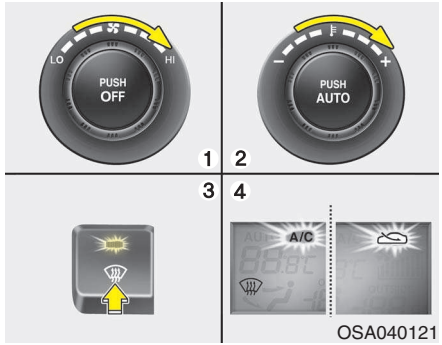

D250202AUN

To defrost outside windshield

1. Set the fan speed to the highest (extreme right) position.
2. Set the temperature to the extreme hot (HI) position.
3. Press the defrost button ( ).
4. The air conditioning will be turned on according to the detected ambient temperature and outside (fresh) air position will be selected automatically.

If the position is selected, lower fan speed is controlled to higher fan speed.

ایران خودرو فارما
FarmaSob.com

D250300AUN

Defogging logic

To reduce the possibility of fogging up the inside of the windshield, the air intake or air conditioning are controlled automatically according to certain conditions such as or position. To cancel or return the defogging logic, do the following.

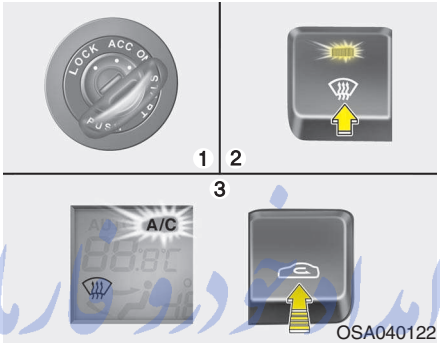

D250302AUN

Automatic climate control system

1. Turn the ignition switch to the ON position.
2. Select the defrost position pressing defrost button ( ).
3. While holding the air conditioning button (A/C) pressed, press the air intake control button ( ) at least 5 times within 3 seconds.

The A/C display blinks 3 times with 0.5 second of interval. It indicates that the defogging logic is canceled or returned to the programmed status.

If the battery has been discharged or disconnected, it resets to the defog logic status.

تلفن شبانه روزی: ۰۲۱۸۸۸۶۲۰۸۵

STORAGE COMPARTMENT

D270000AHM

These compartments can be used to store small items.

⚠ CAUTION

- ***To avoid possible theft, do not leave valuables in the storage compartment.***
- ***Always keep the storage compartment covers closed while driving. Do not attempt to place so many items in the storage compartment that the storage compartment cover cannot close securely.***

⚠ WARNING - Flammable materials

Do not store cigarette lighters, propane cylinders, or other flammable/explosive materials in the vehicle. These items may catch fire and/or explode if the vehicle is exposed to hot temperatures for extended periods.

امداد خودرو فارما
تلفن شبانه روزی: ۰۲۱-۸۸۸۶۲۰۸۵
FarmaSOS.com

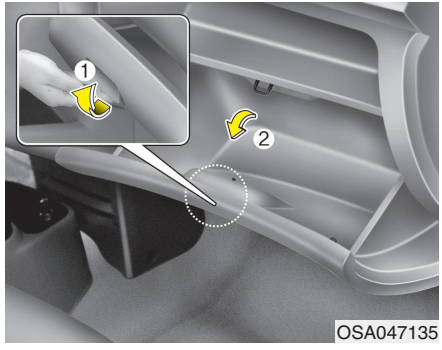

D270200AUN

Glove box

To open the glove box, pull the handle and the glove box will automatically open. Close the glove box after use.

⚠ WARNING

To reduce the risk of injury in an accident or sudden stop, always keep the glove box door closed while driving.

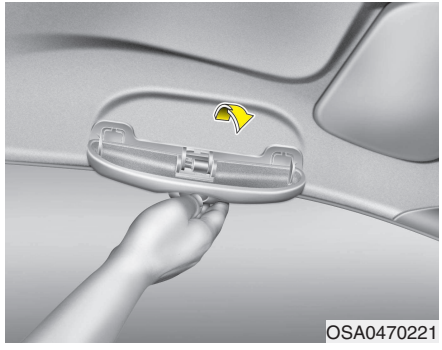

D270300ASA

Sunglass holder (if equipped)

To open the sunglass holder, pull the cover. Place your sunglasses in the compartment door with the lenses facing out. The cover will close when released.

⚠ WARNING

- **Do not keep objects except sunglasses inside the sunglass holder. Such objects can be thrown from the holder in the event of a sudden stop or an accident, possibly injuring the passengers in the vehicle.**
- **Do not open the sunglass holder while the vehicle is moving. The rear view mirror of the vehicle can be blocked by an open sunglass holder.**

تلفن شبانه روزی: ۰۲۱-۸۸۸۶۲۰۸۵
FarmaSOS.com

INTERIOR FEATURES

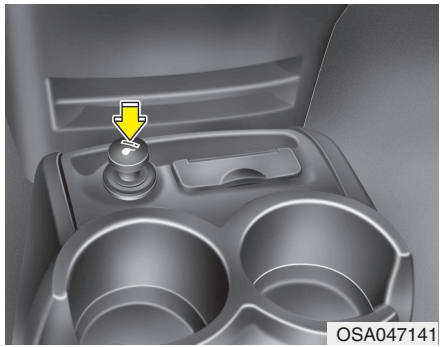

D280100AUN

Cigarette lighter (if equipped)

For the cigarette lighter to work, the ignition switch must be in the ACC position or the ON position.

To use the cigarette lighter, push it all the way into its socket. When the element has heated, the lighter will pop out to the "ready" position.

If it is necessary to replace the cigarette lighter, use only a genuine KIA replacement or its approved equivalent.

⚠ WARNING

- **Do not hold the lighter in after it is already heated because it will overheat.**
- **If the lighter does not pop out within 30 seconds, remove it to prevent overheating.**

⚠ CAUTION

Only a genuine KIA lighter should be used in the cigarette lighter socket. The use of plug-in accessories (shavers, hand-held vacuums, and coffee pots, etc.) may damage the socket or cause electrical failure.

FarmaSOS.com

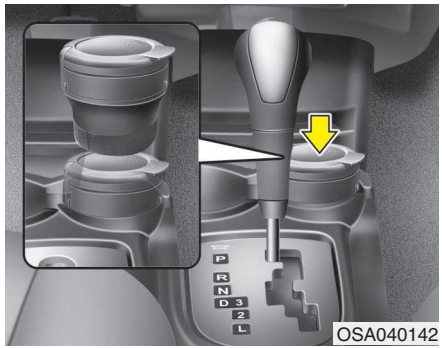

D280200AUN

Ashtray (if equipped)

⚠ WARNING - Ashtray use

- **Do not use the vehicle's ashtrays as waste receptacles.**
- **Putting lit cigarettes or matches in an ashtray with other combustible materials may cause a fire.**

D280201ASA

To use the ashtray, open the cover.

To remove the ashtray to empty or clean, pull it up and out.

D280300APA

Cup holder

⚠ WARNING - Hot liquids

- **Do not place uncovered cups with hot liquid in the cup holder while the vehicle is in motion. If the hot liquid spills, you can burn yourself. Such a burn to the driver could lead to loss of control of the vehicle.**
- **To reduce the risk of personal injury in the event of sudden stop or collision, do not place uncovered or unsecured bottles, glasses, cans, etc., in the cup holder while the vehicle is in motion.**

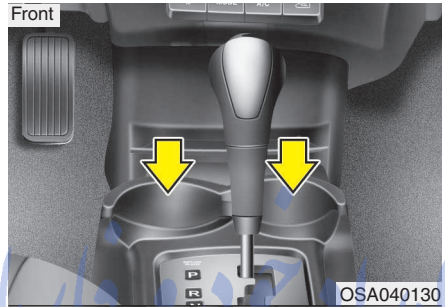

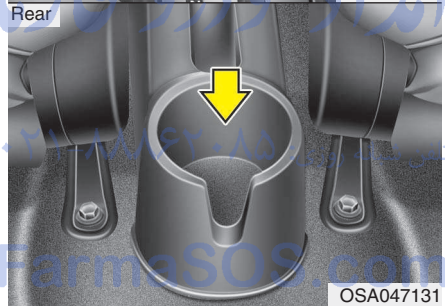

D280301AUN

Front/Rear (if equipped)

Cups or small beverage cans may be placed in the cup holders.

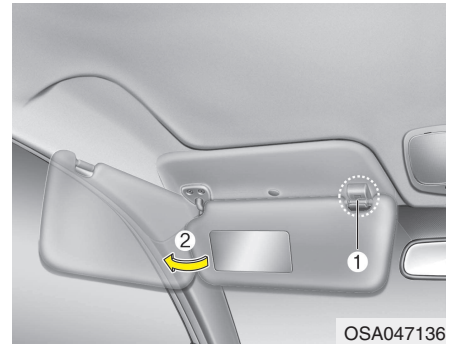

D280400ASA

Sunvisor

Use the sunvisor to shield direct light through the front or side windows.

To use a sunvisor, pull it downward.

To use a sunvisor for the side window, pull it downward, unsnap it from the bracket (1) and swing it to the side (2).

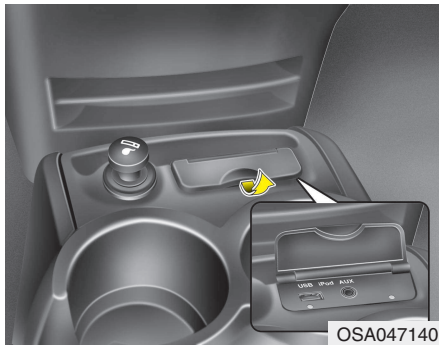

D281400AFD

Aux, USB and iPod port (if equipped)

If your vehicle has an aux and/or USB(universal serial bus) port or iPod port, you can use an aux port to connect audio devices and an USB port to plug in an USB and also an iPod port to plug in an iPod.

✻ NOTICE

When using a portable audio device connected to the power outlet, noise may occur during playback. If this happens, use the power source of the portable audio device.

✻ iPod is a trademark of Apple Inc.

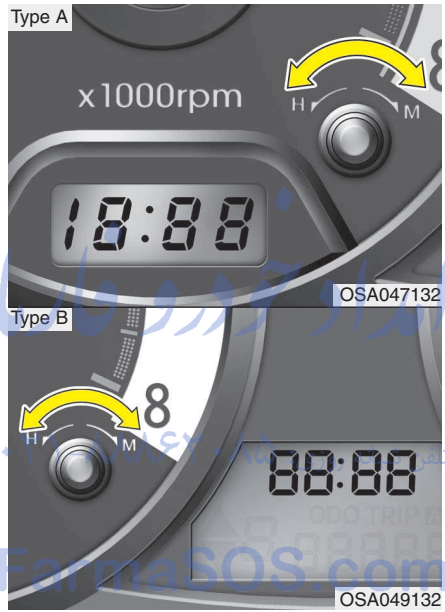

D280600ASA

Digital clock (if equipped)

⚠ WARNING

Do not adjust the clock while driving. You may lose your steering control and cause severe personal injury or accidents.

Whenever the battery terminals or related fuses are disconnected, you must reset the time.

When the ignition switch is in the ACC or ON position, the clock buttons operate as follows:

D280601ASA

Hour:

Turn the knob to the left (H), will advance the time displayed by one hour.

D280602ASA

Minute:

Turn the knob to the right (M), will advance the time displayed by one minute.

D280603ASA

Reset

To clear away the minutes, press the knob for more than 1 second.

Then the clock will be set precisely to the hour.

For example, if the knob is pressed while the time is between 9:01 and 9:29, the display will reset to 9:00.

9:01 ~ 9:29 display changed to 9:00

9:30 ~ 9:59 display changed to 10:00

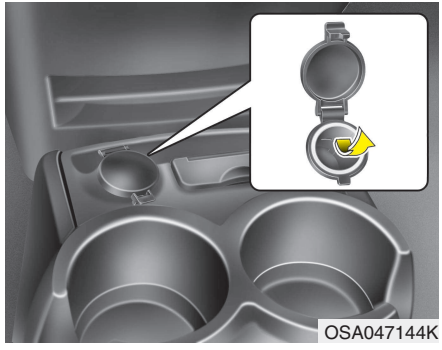
OSA047144K

D280500AUN

Power outlet (if equipped)

The power outlet is designed to provide power for mobile telephones or other devices designed to operate with vehicle electrical systems. The devices should draw less than 10 amps with the engine running.

⚠ CAUTION

- ***Use the power outlet only when the engine is running and remove the accessory plug after use. Using the accessory plug for prolonged periods of time with the engine off could cause battery discharge.***
- ***Only use 12V electric accessories which are less than 10A in electric capacity.***
- ***Adjust the air-conditioner or heater to the lowest operating level when using the power outlet.***
- ***Close the cover when not in use.***
- ***Some electronic devices can cause electronic interference when plugged into a vehicle's power outlet. These devices may cause excessive audio static and malfunctions in other electronic systems or devices used in your vehicle.***

امداد خودرو فارما
تلفن اجابت روزی ۰۲۱-۸۸۸۴۲۸۵
FarmaSOS.com

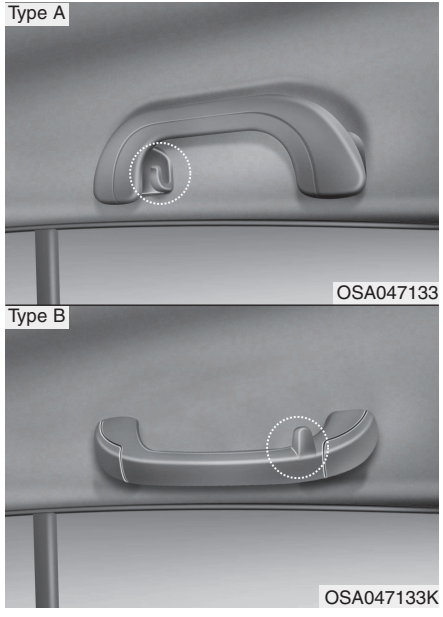

D280800BEN

Clothes hanger (if equipped)

⚠ CAUTION

Do not hang heavy clothes, since those may damage the hook.



D281000ASA

Luggage net (if equipped)

To keep items from shifting in the luggage room, you can use the two hooks located in the luggage room to attach the cargo net.

⚠ CAUTION

Do not put fragile, bulky or excessive quantity of items into the luggage net. They could be damaged.

⚠ WARNING

To avoid eye injury, DO NOT overstretch the netting.

ALWAYS keep your face and body out of the luggage net's recoil path.

DO NOT use the luggage net when the strap has visible signs of wear or damage.

تلفن شبانه روزی: ۰۲۱-۸۸۸۶۲۰۸۵

FarmaSOS.com

AUDIO SYSTEM

Type A

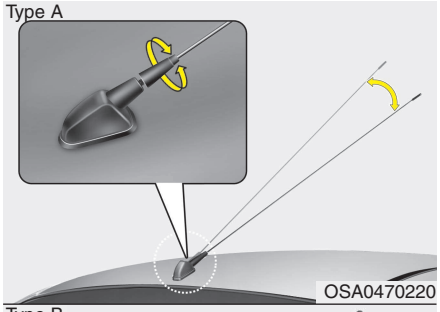

Type B

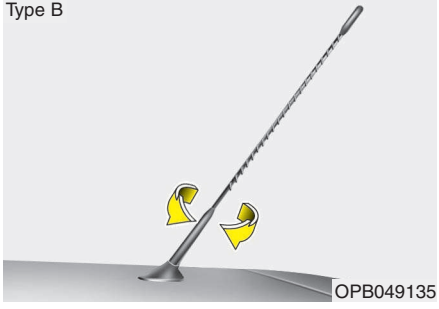

Antenna

Roof antenna

Your vehicle uses a roof antenna to receive both AM and FM broadcast signals. This antenna can be adjusted up and down (type A only) or removed from the vehicle. To remove the antenna, turn it counterclockwise. To install the antenna, turn it clockwise.

⚠ CAUTION

- ***Before entering a place with a low height clearance, be sure that the antenna is fully folded down (type A only) or removed.***
- ***Be sure to remove the antenna before washing the car in an automatic car wash or it may be damaged.***
- ***When reinstalling your antenna, it is important that it is fully tightened and adjusted to the upright position to ensure proper reception.***

تلفن شبانه روزی: ۰۲۱-۸۸۸۶۲۰۸۵
FarmaSOS.com

FM reception

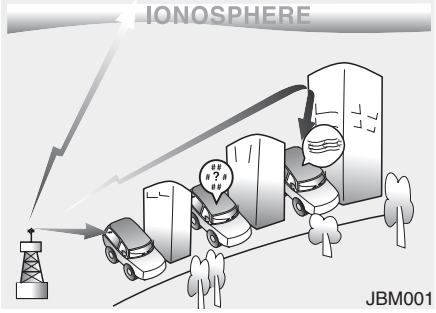

D300800AUN

How car audio works

AM(MW, LW) and FM radio signals are broadcast from transmitter towers located around your city. They are intercepted by the radio antenna on your car. This signal is then received by the radio and sent to your car speakers.

When a strong radio signal has reached your vehicle, the precise engineering of your audio system ensures the best possible quality reproduction. However, in some cases the signal coming to your vehicle may not be strong and clear. This can be due to factors such as the distance from the radio station, closeness of other strong radio stations or the presence of buildings, bridges or other large obstructions in the area.

AM(MW, LW) reception

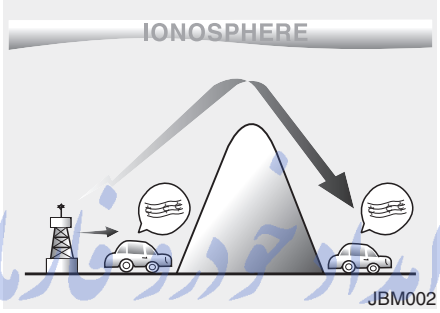

AM(MW, LW) broadcasts can be received at greater distances than FM broadcasts. This is because AM(MW, LW) radio waves are transmitted at low frequencies. These long, low frequency radio waves can follow the curvature of the earth rather than travelling straight out into the atmosphere. In addition, they curve around obstructions so that they can provide better signal coverage.

FM radio station

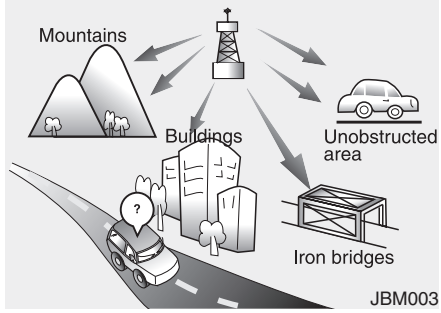

FM broadcasts are transmitted at high frequencies and do not bend to follow the earth's surface. Because of this, FM broadcasts generally begin to fade at short distances from the station. Also, FM signals are easily affected by buildings, mountains, or other obstructions. These can result in certain listening conditions which might lead you to believe a problem exists with your radio. The following conditions are normal and do not indicate radio trouble:

FarmaSOS.com

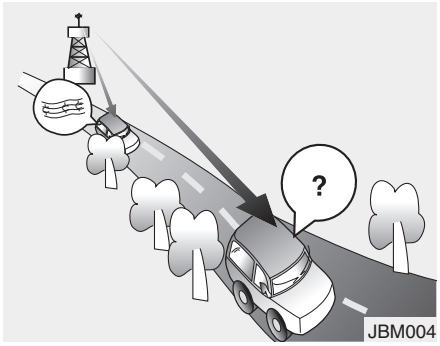

- Fading - As your car moves away from the radio station, the signal will weaken and sound will begin to fade. When this occurs, we suggest that you select another stronger station.
- Flutter/Static - Weak FM signals or large obstructions between the transmitter and your radio can disturb the signal causing static or fluttering noises to occur. Reducing the treble level may lessen this effect until the disturbance clears.

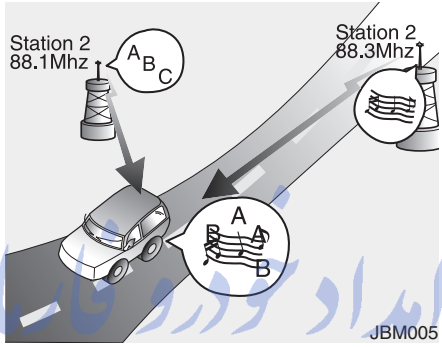

- Station Swapping - As a FM signal weakens, another more powerful signal near the same frequency may begin to play. This is because your radio is designed to lock onto the clearest signal. If this occurs, select another station with a stronger signal.
- Multi-Path Cancellation - Radio signals being received from several directions can cause distortion or fluttering. This can be caused by a direct and reflected signal from the same station, or by signals from two stations with close frequencies. If this occurs, select another station until the condition has passed.

Using a cellular phone or a two-way radio

When a cellular phone is used inside the vehicle, noise may be produced from the audio equipment. This does not mean that something is wrong with the audio equipment. In such a case, use the cellular phone at a place as far as possible from the audio equipment.

⚠ CAUTION

When using a communication system such a cellular phone or a radio set inside the vehicle, a separate external antenna must be fitted. When a cellular phone or a radio set is used with an internal antenna alone, it may interfere with the vehicle's electrical system and adversely affect safe operation of the vehicle.

⚠ WARNING

Don't use a cellular phone when you are driving. You should stop at a safe place to use a cellular phone.

FarnaadCom

Stereo radio operation (M445) (if equipped)



1. FM/AM Selection Button
2. Automatic Channel Selection Button
3. Power ON/OFF
4. Preset Button
5. TUNE/AUDIO Control Button
6. SCAN Button
7. AUTO STORE Button

SA-M445

ایدا خودرو فارما
تلفن شبانه روزی: ۰۲۱-۸۸۸۶۲۰۸۵
FarmaSOS.com

1. FM/AM Selection Button

Turns to FM/AM mode and toggles FM1 and FM2➟AM➟FM1··· when the button is pressed each time.

2. Automatic Channel Selection Button

When the [SEEK ∨] button is pressed, it reduces the band frequency by 100KHz to automatically select a channel.

Stops at the previous frequency if no channel is found.

When the [SEEK ∧] button is pressed, it increases the band frequency by 100KHz to automatically select a channel.

Stops at the previous frequency if no channel is found.

3. Power ON/OFF & Volume Control Button

Turns ON/OFF when the IGNITION SWITCH is on ACC or ON.

If the button is turned to the right, it increases the volume and the button is turned to the left, decreases the volume.

4. Preset Button

Push [1]~[6]button less than 0.8 second to play the channel saved in each button.

Push preset button for 0.8 second or longer to save the current channel to the respective button with a beep.

5. TUNE/AUDIO Control Button

Turn this button clockwise by one notch to increase frequency by 100KHz from current frequency.

Turn this button counterclockwise by one notch to decrease frequency by 100KHz from current frequency.

Turns to AUDIO CONTROL mode, and toggles in the order of BASS➟MIDDLE➟TREBLE➟FADER➟BALANCE➟···BASS··· when the button is pressed each time.

6. SCAN Button

Plays the first 10 seconds of each channel, when the button is pressed.

To cancel the mode, press the button once again.

7. AUTO STORE Button

When the button is pressed, it automatically selects and saves channels with high reception rate to PRESET buttons(1~6) and plays the channel saved in PRESET1.

If no channel is saved after AST, it will play the previous channel.

⚠ CAUTION

- ***Do not place beverages close to the audio system. The audio system mechanism may be damaged if you spill them.***
- ***Do not strike or allow anything to impact the audio system, damage to the system mechanisms could occur.***

FarmaSOS.com

Compact disc player operation (M445) (if equipped)

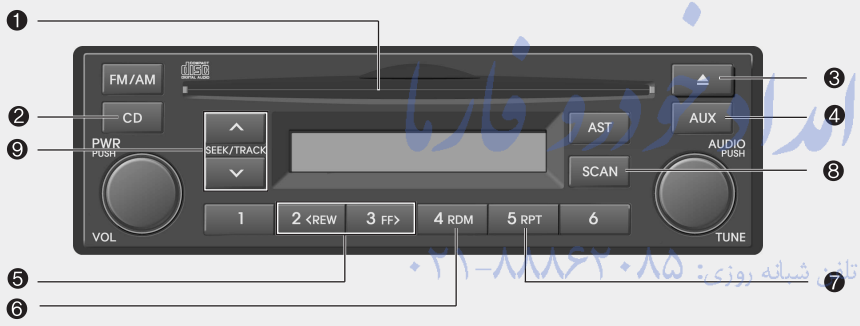

1. CD Loading Slot
2. CD Selection Button
3. CD Eject Button
4. AUX Selection Button
5. REW/FF Button
6. RANDOM Button
7. REPEAT Button
8. SCAN Button
9. Automatic Track Selection Button

SA-M445

FarmaSOS.com

1. CD Loading Slot

Insert the CD with the label facing upward.

When the ignition switch is on ACC or ON and the power is OFF, the power is automatically turned on if the CD is loaded.

This CDP supports 12cm CDs. But if VCD. Data CD, MP3 CD are loaded, "Disc-Err" message will appear and the CD will be ejected.

2. CD Selection Button

If there is a CD in the CDP deck, it turns to the CD mode when the button is pressed each time.

3. CD Eject Button

Push ⏏ button to eject the CD during CD playback.

This button is enabled when ignition switch is off.

4. AUX Selection Button

If the auxiliary device is connected, it turns to the AUX mode to play the sound from the auxiliary player.

If there is no disc and the auxiliary device is not connected, it will not turn to the AUX mode.

5. Rewind / Fast Forward Button

- Rewind Button
  Press and hold [2 REW] button while playing a CD then the player will play the disk backwards 5 times the regular speed for the first 5 seconds and 15 times faster after that. The sound will be reduced by 12dB while you are holding the button.
- Fast Forward Button
  Press and hold [3 FF] button while playing a CD then the player will play the disk forward 5 times the regular speed for the first 5 seconds and 15 times faster after that. The sound will be reduced by 12dB while you are holding the button.

6. RANDOM (RDM) Button

You can listen to the tracks in random, rather than sequential order.

To use random, do the following:

Press the RDM button to listen to recorded tracks in random sequence. Press RDM again to cancel.

7. REPEAT Button

Repeats the current song when the button is pressed for less than 0.8 second.

Repeats the entire disc when the button is pressed for 0.8 second or longer.

8. SCAN Button

Plays the first 10 seconds of each channel.

To cancel the mode, press the button once again.

9. Automatic Track Selection Button

- Push [SEEK ∨] button for less than 0.8 second to play from the beginning of the current song.
- Push [SEEK ∨] button for less than 0.8 second and press again within 1 second to play the previous song.
- Push [SEEK ∨] button for 0.8 second or longer to rewind the current song.
- Push [SEEK ∧] button for less than 0.8 second to play the next song.
- Push [SEEK ∧] button for less than 0.8 second or longer to fast-foward the current song.

FarmaSOS.com

✻ NOTICE

- To assure proper operation of the unit, keep the vehicle interior temperature within a normal range by using the vehicle's air conditioning or heating system.
- When replacing the fuse, replace it with a fuse having the correct capacity.
- All stored bookmarks are erased when the car battery is disconnected or power to the vehicle is lost. If this occurs, the bookmarks will have to be reset.
- This equipment is designed to be used only in a 12 volt DC battery system with negative ground.
- This unit is made of precision parts. Do not attempt to disassemble or adjust any parts.
- Do not expose this equipment (including the speakers and CD) to water or excessive moisture.

⚠ CAUTION

- *Do not insert warped or poor quality discs into the CD player as damage to the unit may occur.*
- *Do not insert anything such as coins into the player slot as damage to the unit may occur.*
- *Do not place beverages close to the audio system. It may damage the playback mechanism if you spill them.*
- *Do not strike or allow anything to impact the audio system, damage to the system mechanisms could occur.*
- *Off-road or rough surface driving may cause the compact disc to skip. Do not use the compact disc when driving in such conditions as damage to the compact disc face could occur.*
- *Do not attempt to grab or pull the compact disc out while the disc is being pulled into the audio unit by self-loading mechanism.*

  Damage to the audio unit and compact disc could occur.

(Continued)

(Continued)

- *Avoid using recorded compact discs in your audio unit. Original compact discs are recommended for best results.*

⚠ WARNING

When driving your vehicle, be sure to keep the volume of the unit set low enough to allow you to hear sounds coming from the outside.

FarmaSOS.com

Stereo radio operation (PA710) (if equipped)



1. FM Selection Button
2. AM Selection Button
3. CD Selection Button
4. Power ON/OFF & Volume Control Button
5. Automatic Channel Selection Button
6. INFO Button
7. AUX Selection Button
8. AUTO STORE Button
9. SET UP Button
10. ENTER/TUNE Button
11. Preset Button

SA-PA710A

FarmaSOS.com

1. FM Selection Button

Turns to FM mode and toggles FM1 ➟ FM2➟FM1··· when the button is pressed each time.

2. AM Selection Button

Turns to AM mode and toggles AM when the button is pressed each time.

3. CD Selection Button

If there is a CD in the CDP deck it turns to the CD mode when the button is pressed each time.

4. Power ON/OFF & Volume Control Button

- Turns on/off when the IGNITION SWITCH is on ACC or ON. If the button is turned to the right, it increases the volume and left, decreases the volume.
- In AUX mode, the volume and tone (BASS, MID, TRE) are adjusted in a separate way.

  If you pull out AUX from a jack and insert it again, then only volume goes back to 10-step.

5. Automatic Channel Selection Button

- When the [SEEK ╲╱]button is pressed, it reduces the band frequency by 100Khz to automatically select a channel.

  Stops at the previous frequency if no channel is found.
- When the [SEEK ╱╲]button is pressed, it increases the band frequency by 100khz to automatically select a channel.

  Stops at the previous frequency if no channel is found.

6. INFO Button

Displays the information of the channel currently played by RDS.

7. AUX Selection Button

If the auxiliary device is connected, it turns to AUX MODE to play the sound from the auxiliary player.

If there is no disc and the auxiliary device is not connected, it displays "NO MEDIA" for 5 seconds and returns to the previous mode.

8. AUTO STORE Button

When the button is pressed, it automatically selects and saves channels with high reception rate to PRESET buttons (1~6) and plays the channel saved in PRESET1.

If no channel is saved after the AUTO STORE button is pressed, it will play the previous channel.

9. SET UP Button

Press this button to turn to the SOUND, SCROLL adjustment mode.

If no action is taken for 5 seconds after pressing the button, it will return to the play mode.(After entering SET UP mode, move between items using the left, right and PUSH functions of the TUNE button.)

The SET UP item changes from SOUND (BASS, MIDDLE, TREBLE, FADER, BALANCE, RETURN) ➟ SCROLL (ON, OFF) ➟ RETURN.

امداد خودرو فارما
تلفن شبانه روزی: ۰۲۱-۸۸۸۶۲۰۸۵
FarmaSOS.com

10. TUNE/ENTER Button

Turn this button clockwise by one notch to increase frequency by 100Khz from current frequency.

Turn this button counterclockwise by one notch to decrease frequency by 100Khz from current frequency.

Press this button while holding SET UP button to activate / inactivate the item.

Select SET UP item using left and right function of the Tune button.

11. Preset Button

Push [1]~[6] buttons less than 0.8 second to play the channel saved in each button.

Push the preset button for 0.8 second or longer to save the current channel to the respective button with a beep.

⚠ CAUTION

- ***Do not place beverages close to the audio system. It may damage the audio system mechanism if you spill them.***
- ***Do not strike or allow anything to impact the audio system, damage to the system mechanisms could occur.***

تلفن شبانه روزی: ۰۲۱-۸۸۸۶۲۰۸۵

FarmaSOS.com

Compact disc player operation (PA710) (if equipped)



1. CD Loading Slot
2. CD Eject Button
3. CD Selection Button
4. Automatic Track Selection Button
5. INFO Button
6. ENTER/TUNE Button
7. REPEAT Button
8. RANDOM Button
9. AST (CD SCAN) Button
10. FOLDER Moving Button

UR-200SAD-CD

FarmaSOS.com

1. CD Loading Slot

Insert the CD with the label facing upward.

When the ignition switch is on ACC or ON and the power is off, the power is automatically turned on if the CD is loaded.

This CDP supports 12 cm CDs. But if VCD, Data CD, MP3 CD are loaded, "Er-6" message will appear and the CD will be ejected.

2. CD Eject Button

Push ⏏ button to eject the CD during CD playback. This button is enabled when ignition switch is off.

3. CD Selection Button

If there is a CD in the CDP deck, it turns to the CD mode when the button is pressed each time.

4. Automatic Track Selection Button

- Push [SEEK ∨] button for less than 0.8 second to play from the beginning of the current song.
- Push [SEEK ∨] button for less than 0.8 second and press again within 1 seconds to play the previous song.
- Push [SEEK ∨] button for 0.8 second or longer to rewind the current song.
- Push [SEEK ∧] button for less than 0.8 second to play the next song.
- Push [SEEK ∧] button for less than 0.8 second or longer to fast-foward the current song.

5. INFO Button

Displays the information of the current CD TRACK in the order of DISC TITLE➟DISC ARTIST➟TRACK TITLE➟ TRACK ARTIST➟TOTAL TRACK➟ Play Screen➟DISC TITLE➟….(It is not displayed if the information is not available on the disc.) (If MP3 is displayed FILE NAME➟TITLE➟ARTIST➟ALBUM➟ FOLDER➟TOTAL FILE➟FILE NAME➟…)

6. ENTER/TUNE Button

Turn this button clockwise to display songs after the current song.

Also, turn this button counterclockwise to display songs before the current song.

To listen to the displayed song, press the button to skip to the song and play.

7. REPEAT Button

Repeats current song when the button is pressed for less than 0.8 second.

Repeats the entire disc when the button is pressed for 0.8 second or longer.

8. RANDOM (RDM) Button

You can listen to the tracks in random, rather than sequential order.

To use random, do the following:

Press the RDM button to listen to recorded tracks in random sequence. Press RDM again to cancel.

9. AST(CD SCAN) Button

Plays the first 10 seconds of each song in the disc.

To cancel the mode, press the key once again.

10. FOLDER Moving Button

- Moves [FLDR ∨] button child folder of the current folder and displays the first song in the folder. Press ENT/TUNE button to move to the folder displayed. It will play the first song in the folder.
- Moves [FLDR ∧] button parent folder and displays the first song in the folder. Press ENT/TUNE button to move to the folder displayed. It will play the first song in the folder.

FarmaCIS.com

✻ NOTICE

- To assure proper operation of the unit, keep the vehicle interior temperature within a normal range by using the vehicle's air conditioning or heating system.
- When replacing the fuse, replace it with a fuse having the correct capacity.
- The preset station frequencies are all erased when the car battery is disconnected. Therefore, all data will have to be set again if this should occur.
- Do not add any oil to the rotating parts. Keep magnets, screwdrivers and other metallic objects away from the tape mechanism and head.
- This equipment is designed to be used only in a 12 volt DC battery system with negative ground.
- This unit is made of precision parts. Do not attempt to disassemble or adjust any parts.
- Do not expose this equipment (including the speakers and tape) to water or excessive moisture.

⚠ CAUTION

- *Do not insert warped or poor quality discs into the CD player as damage to the unit may occur.*
- *Do not insert anything like coins into the player slot as damage to the unit may occur.*
- *Do not place beverages close to the audio system. It may damage the playback mechanism if you spill them.*
- *Do not strike or allow anything to impact the audio system, damage to the system mechanisms could occur.*
- *Off-road or rough surface driving may cause the compact disc to skip. Do not use the compact disc when driving in such conditions as damage to the compact disc face could occur.*
- *Do not attempt to grab or pull the compact disc out while the disc is being pulled into the audio unit by self-loading mechanism.*

  Damage to the audio unit and compact disc could occur.

(Continued)

(Continued)

- *Avoid using recorded compact discs in your audio unit. Original compact discs are recommended for best results.*

⚠ WARNING

When driving your vehicle, be sure to keep the volume of the unit set low enough to allow you to hear sounds coming from the outside.

FarmaSOS.com

USB (PA710) (if equipped)



1. AUX(USB) Selection Button
2. Track Moving Button
3. INFO Button
4. Folder moving Button
5. ENTER/TUNE Button
6. RANDOM Button
7. REPEAT Button
8. SCAN Button

SA-PA710C

In case USB is connected to the multimedia jack inside the consol on the right hand side of the driver's seat. When USB is connected, the 'USB' icon will be displayed on the top right corner of the display screen.

1. AUX(USB) Selection Button

If the USB is connected, it switches to the USB mode from the CD mode to play the song files stored in the USB.

If there are no CD and USB(AUX), it displays 'NO MEDIA'.

2. Track Moving Button

- Press the [SEEK ∨] button for less than 0.8 second to play from the beginning of the song currently played.

  Press the button for less than 0.8 second and press it again within 1 second to play the previous track.

  Press the button for 0.8 second or longer to play the song in reverse direction in fast speed.
- Press the [SEEK ∧] button for less than 0.8 second to move to the next track. Press the button for 0.8 second or longer to play the song in forward direction in fast speed.

3. INFO Button

Displays the information of the file currently played in the order of FILE NAME ➡TITLE➡ARTIST➡ALBUM➡FOLDER➡ TOTAL FILE➡FILE NAME➡… (Displays no information if the file has no song information.)

4. Folder moving Button

- If [FLDR ∨] button is pressed, it moves to the child folder of the current folder and displays the first song in the folder. Press ENTER/TUNE button to move to the folder displayed. It will play the first song in the folder.
- If [FLDR ∧] is button pressed, it moves to the parent folder and displays the first song in the folder. Press ENTER/TUNE button to move to the folder displayed. It will play the first song in the folder.

5. ENTER/TUNE Button

Turn this button clockwise to display the songs next to the currently played song.

Turn the button counterclockwise to display the songs before the currently played song.

Press the button to skip to the selected song.

6. RANDOM Button

Press the button for less than 0.8 second to start or stop the random playback of the songs in the current folder.

Press the button for more than 0.8 second to randomly play the entire songs in the USB device.

Press the button again to cancel the mode.

7. REPEAT Button

Press the button for less than 0.8 second to repeat the song currently played.

Press the button for more than 0.8 second to repeat the entire songs in the USB device.

8. SCAN Button

Plays 10 seconds of each song in the USB device.

Press the button once again to cancel scanning.

FarnaSOS.com

⚠ CAUTION IN USING USB DEVICE

- *To use the external USB device, make sure the device is not mounted when starting up the vehicle and mount the device after starting up.*
- *If you start the vehicle when the USB device is mounted, it may damage the USB device. (USB is not ESA)*
- *If the vehicle is started up or turned off while the external USB device is connected, the external USB device may not work.*
- *It may not play inauthentic MP3 or WMA files.*
  1) *It can only play MP3 files with the compression rate between 8Kbps~320Kbps.*
  2) *It can only play WMA music files with the compression rate between 8Kbps~320Kbps.*
- *Take cautions for static electricity when mounting or dismounting the external USB device.*
- *An encoded MP3 PLAYER is not recognizable.*

(Continued)

(Continued)

- *Depending on the condition of the external USB device, the connected external USB device can be unrecognizable.*
- *When the formatted byte/sector setting of External USB devices is not either 512BYTE or 2048BYTE, then the device will not be recognized.*
- *The USB device should only be formatted to FAT 12/16/32.*
- *USB device without USB I/F authentication may not be recognizable.*
- *Make sure the USB connection terminal does not come in contact with human body or any object.*
- *If you repeat mounting or dismounting USB device in a short period of time, it may break the device.*
- *You might hear a strange noise when mounting or dismounting a USB device.*

(Continued)

(Continued)

- *If you dismount the external USB device during playback in USB mode, the external USB device can be damaged or malfunction. Therefore, mount the external USB device when the engine is turned off or in another mode.*
- *Depending on the type and capacity of the external USB device or the type of the files stored in the device, there is a difference in the time taken for recognition of the device, but this is not an indicator of trouble and you only have to wait.*
- *Do not use the USB device for other purposes than playing music files.*
- *Use of USB accessories such as recharger or heater using USB I/F may lower the performance or cause trouble.*
- *If you use devices such as a USB hub you purchased separately, the vehicle's audio system may not recognize the USB device. Connect the USB device directly to the multimedia terminal of the vehicle.*

(Continued)

FamiCar.com

(Continued)

- *If USB device is divided by logical drives, only the music files on the highest-priority drive are recognized by car audio.*
- *Devices such as MP3 Player/ Cellular phone/Digital camera those are not recognizable by standard USB I/F can be unrecognizable.*
- *USB devices other than standardized goods (METAL COVER TYPE USB) can be unrecognizable.*
- *USB flash memory reader (such as CF, SD, microSD, etc.) or external-HDD type devices can be unrecognizable.*
- *Music files protected by DRM (DIGITAL RIGHTS MANAGEMENT) are not recognizalbe.*
- *The data in the USB memory may lost while using this AUDIO, It is recommeded to back up important data on a personal.*

(Continued)

(Continued)

- *Please avoid using USB memory products which can be used as key chains or cellular phone accessories as they could cause damage to the USB jack. Please make certain only to use plug type connector products as shown below.*



ایران خودرو فارما
تلفن شبانه روزی: ۰۲۱-۸۸۸۶۲۰۸۵
FarmaSOS.com

RUNNING iPod (PA710) (if equipped)



1. AUX(iPod) Selection Button
2. Track Moving Button
3. INFO Button
4. Category Selection Button
5. ENTER/TUNE Button
6. RANDOM Button
7. REPEAT Button

❊ iPod is a trademark of Apple Inc.

SA-PA710D

FarmaSOS.com

In case the iPod exclusive cable is connected to the multimedia jack inside the consol on the right hand side of the driver's seat. When the iPod is connected, the 'iPod' icon will be displayed on the top right corner of the display screen.

1. AUX(iPod) Selection Button

If iPod is connected, it switches to the iPod mode from the CD mode to play the song files stored in the iPod.

If there are no CD and AUX(iPod), it displays 'NO MEDIA'

2. Track Moving Button

- Press the [SEEK∨] button for less than 0.8 second to play from the beginning of the song currently played.

  Press the button for less than 0.8 second and press it again within 1 second to play the previous track.

  Press the button for 0.8 second or longer to play the song in reverse direction in fast speed.
- Press the [SEEK∧] button for less than 0.8 second to move to the next track. Press the button for 0.8 second or longer to play the song in forward direction in fast speed.

3. INFO Button

Displays the information of the file currently played in the order of FILE NAME➟TITLE➟ARTIST➟ALBUM➟FOLDER➟TOTAL FILE➟FILE NAME➟… (Displays no information if the file has no song information.)

4. Category Selection Button

Moves to the upper category from currently played category of the iPod.

You will be able to search through the lower category of the selected category.

The order of iPod's category is SONG, ALBUMES, ARTISTS, GENRES, and iPod. (Refer to the iPod user's manual for more information)

5. ENTER/TUNE Button

Turn this button clockwise to display the songs next to the currently played song.

Turn the button counterclockwise to display the songs before the currently played song.

Press the button to skip to the selected song.

6. RANDOM Button

Press the button for less than 0.8 second to start or stop the random playback of the songs in the current folder.

Press the button for longer than 0.8 second to randomly play all songs in the entire album of the iPod.

Press the button again to cancel the mode.

7. REPEAT Button

Repeats the song currently played.

✻ NOTICE FOR USING iPod DEVICE

- Some iPod models might not support the communication protocol and the files will not be played. (iPod models supported: Mini, 4G, Photo, Nano, 5G)
- The order of search or playback of songs in the iPod can be different from the order searched in the audio system.
- If the iPod crashes due to its own trouble, reset the iPod. (Reset: Refer to iPod manual)
- iPod may not operate normally on low battery.

⚠ CAUTION IN USING iPod DEVICE

- *You need the power cable exclusive for an iPod in order to operate an iPod with the buttons on the audio system. The PC cable provided by Apple may cause a malfunction and do not use it for vehicle use.*
- *When connecting the device with an iPod cable, push in the jack fully to not to interfere with communication.*
- *When adjusting the sound effects of an iPod and the audio system, the sound effects of both devices will overlap and might reduce or distort the quality of the sound.*
- *Deactivate (turn off) the equalizer function of an iPod when adjusting the audio system's volume, and turn off the equalizer of the audio system when using the equalizer of an iPod.*

(Continued)

(Continued)

- *When the iPod cable is connected, the system can be switched to the AUX mode even without the iPod device and can cause noise. Disconnect the iPod cable when you are not using the iPod device.*
- *When the iPod is not used for the audio system, the iPod cable has to be separate from iPod devices. Origin display of iPod may not be displayed.*

FarsiBook.com

Stereo radio operation (H000) (if equipped)



1. FM/AM Selection Button
2. CD Selection Button
3. TA Selection Button
4. Power ON/OFF & Volume Control Button
5. Automatic Channel Selection Button
6. INFO Button
7. AUX Selection Button
8. AUTO STORE Button
9. SET UP Button
10. ENTER/TUNE Button
11. Preset Button

SA-H000A

FarmaSOS.com

1. FM/AM Selection Button

Turns to FM/AM mode and toggles in the order of FM1➟FM2➟FMA➟AM➟AMA➟FM1··· when the button is pressed each time.

2. CD Selection Button

If there is a CD in the CDP DECK it turns to CD mode when the button is pressed each time.

3. TA Selection Button

In the FM, CD and AUX mode, you may turn on/off the reception of the TA channels of RDS.

4. Power ON/OFF & Volume Control Button

- Turns on/off when the IGNITION SWITCH is on ACC or ON. If the button is turned to the right, it increases the volume and left, decreases the volume.
- In AUX mode, the volume and tone (BASS, MID, TRE) are adjusted in a separate way.

  If you pull out AUX from a jack and insert it again, then only volume goes back to 10-step.

5. Automatic Channel Selection Button

- When the [SEEK ⏬]button is pressed, it reduces the band frequency by 50khz to automatically select a channel. Stops at the previous frequency if no channel is found.
- When the [SEEK ⏫]button is pressed, it increases the band frequency by 50khz to automatically select a channel. Stops at the previous frequency if no channel is found.

6. INFO Button

Displays the information of the channel currently played by RDS.

7. AUX Selection Button

If the auxiliary device is connected, it turns to AUX MODE to play the sound from the auxiliary player.

If there is no disc and the auxiliary device is not connected, it displays "NO MEDIA" for 5 seconds and returns to the previous mode.

8. AUTO STORE Button

- When you press the [AST] button, the mode changes to 'Auto store Band' and it saves the result. (FM1 or FM2 changes to FMA, AM changes to AMA.)
- When the button is pressed, it automatically selects and saves channels with high reception rate to PRESET buttons (1~6) and plays the channel saved in PRESET1.

  If no channel is saved after the AUTO STORE button is pressed, it will play the previous channel.

9. SET UP Button

Press this button to turn to the SOUND, RDS option, SCROLL adjustment mode.

If no action is taken for 5 seconds after pressing the button, it will return to the play mode.(After entering SET UP mode, move between items using the left, right and PUSH functions of the TUNE button.)

The SET UP item changes from SOUND (BASS, MIDDLE, TREBLE, FADER, BALANCE, RETURN) ➟ RDS(AF, REG, NEWS, PTY, VOLUME, RETURN) ➟ SCROLL (ON, OFF) ➟ RETURN.

امداد خودرو فارما
تلفن شبانه روزی: ۰۹۱۲-۸۸۸۶۱۰۸۵
FarmaSOS.com

10. ENTER/TUNE Button

Turn this button clockwise by one notch to increase frequency by 0.05Mhz from current frequency.

Turn this button counterclockwise by one notch to decrease frequency by 0.05Mhz from current frequency.

Press this button while holding the SET UP button to activate/inactivate the item.

Select a SET UP item using the left and right function of the Tune button.

11. Preset Button

Push [1]~[6] buttons less than 0.8 second to play the channel saved in each button.

Push the Preset button for 0.8 second or longer to save the current channel to the respective button with a beep.

⚠ CAUTION

- ***Do not place beverages close to the audio system. It may damage the playback mechanism if you spill them.***
- ***Do not strike or allow anything to impact the audio system, damage to the system mechanisms could occur.***

تلفن شبانه روزی: ۰۲۱-۸۸۸۶۲۰۸۵

FarmaSOS.com

Compact disc player (H000) (if equipped)



1. CD Loading Slot
2. CD Eject Button
3. CD Selection Button
4. Automatic Track Selection Button
5. INFO Button
6. ENTER/TUNE Button
7. REPEAT Play Button
8. RANDOM Play Button
9. AST (CD SCAN) Play Button
10. FOLDER Moving Button

UR-200SAE-CD

امداد خودرو فارما
تلفن شبانه‌روزی ۰۸۰۰۰۰۰۰۰۰۰
FarmaSOS.com

1. CD Loading Slot

Insert the CD with the label facing upward.

When the ignition switch is on ACC or ON and the power is off, the power is automatically turned on if the CD is loaded.

This CDP supports 12 cm CDs. But if VCD, Data CD, MP3 CD are loaded, "Er-6" message will appear and the CD will be ejected.

2. CD Eject Button

Push ⏏ button to eject the CD during CD playback. This button is enabled when ignition switch is off.

3. CD Selection Button

If there is a CD in the CDP deck, it turns to the CD mode when the button is pressed each time.

4. Automatic Track Selection Button

- Push [SEEK ⏬] button for less than 0.8 second to play from the beginning of the current song.
- Push [SEEK ⏬] button for less than 0.8 second and press again within 1 seconds to play the previous song.
- Push [SEEK ⏬] button for 0.8 second or longer to rewind the current song.
- Push [SEEK ⏫] button for less than 0.8 second to play the next song.
- Push [SEEK ⏫] button for less than 0.8 second or longer to fast-foward the current song.

5. INFO Button

Displays the information of the current CD TRACK in the order of DISC TITLE➟DISC ARTIST➟TRACK TITLE➟TRACK ARTIST➟TOTAL TRACK➟ Play Screen➟DISC TITLE➟….(It is not displayed if the information is not available on the disc.) (If MP3 is displayed FILE NAME➟TITLE➟ARTIST➟ALBUM➟FOLDER➟TOTAL FILE➟FILE NAME➟ …)

6. ENTER/TUNE Button

Turn this button clockwise to display songs after the current song.

Also, turn this button counterclockwise to display songs before the current song.

To listen to the displayed song, press the button to skip to the song and play.

7.REPEAT Button

Repeats current song when the button is pressed for less than 0.8 second.

Repeats the entire disc when the button is pressed for 0.8 second or longer.

8. RANDOM (RDM) Button

You can listen to the tracks in random, rather than sequential order.

To use random, do the following:

Press the RDM button to listen to recorded tracks in random sequence. Press RDM again to cancel.

9. AST(CD SCAN) Play Button

Plays the first 10 seconds of each song in the disc.

To cancel the mode, press the key once again.

10. FOLDER Moving Button

- Moves [FLDR ▼] button child folder of the current folder and displays the first song in the folder. Press ENT/TUNE button to move to the folder displayed. It will play the first song in the folder.
- Moves [FLDR ▲] button parent folder and displays the first song in the folder. Press ENT/TUNE button to move to the folder displayed. It will play the first song in the folder.

تلفن شبانه روزی: ۰۷۵-۳۲۲۲۸۸۸۶-۰۲۱
FarmaSOS.com

✻ NOTICE

- To assure proper operation of the unit, keep the vehicle interior temperature within a normal range by using the vehicle's air conditioning or heating system.
- When replacing the fuse, replace it with a fuse having the correct capacity.
- All stored bookmarks are erased when the car battery is disconnected or power to the vehicle is lost. If this occurs, the bookmarks will have to be reset.
- This equipment is designed to be used only in a 12 volt DC battery system with negative ground.
- This unit is made of precision parts. Do not attempt to disassemble or adjust any parts.
- Do not expose this equipment (including the speakers and CD) to water or excessive moisture.

⚠ CAUTION

- *Do not insert warped or poor quality discs into the CD player as damage to the unit may occur.*
- *Do not insert anything like coins into the player slot as damage to the unit may occur.*
- *Do not place beverages close to the audio system. It may damage the playback mechanism if you spill them.*
- *Do not strike or allow anything to impact the audio system, damage to the system mechanisms could occur.*
- *Off-road or rough surface driving may cause the compact disc to skip. Do not use the compact disc when driving in such conditions as damage to the compact disc face could occur.*
- *Do not attempt to grab or pull the compact disc out while the disc is being pulled into the audio unit by the self-loading mechanism. Damage to the audio unit and compact disc could occur.*

(Continued)

(Continued)

- *Avoid using recorded compact discs in your audio unit. Original compact discs are recommended for best results.*

⚠ WARNING

When driving your vehicle, be sure to keep the volume of the unit set low enough to allow you to hear sounds coming from the outside.

FarnaCars.com

USB (H000) (if equipped)



1. AUX(USB) Selection Button
2. Track Moving Button
3. INFO Button
4. Folder moving Button
5. ENTER/TUNE Button
6. RANDOM Button
7. REPEAT Button
8. SCAN Button

SA-H000B

FarmaSOS.com

In case USB is connected to the multimedia jack inside the consol on the right hand side of the driver's seat. When USB is connected, the 'USB' icon will be displayed on the top right corner of the display screen.

1. AUX(USB) Selection Button

If USB is connected, it switches to the USB mode from the CD mode to play the song files stored in the USB.

If there are no CD and USB(AUX), it displays 'NO MEDIA'.

2. Track Moving Button

- Press the [SEEK ⏬] button for less than 0.8 second to play from the beginning of the song currently played.

  Press the button for less than 0.8 second and press it again within 1 second to play the previous track.

  Press the button for 0.8 second or longer to play the song in reverse direction in fast speed.
- Press the [SEEK ⏫] button for less than 0.8 second to move to the next track. Press the button for 0.8 second or longer to play the song in forward direction in fast speed.

3. INFO Button

Displays the information of the file currently played in the order of FILE NAME ➡TITLE➡ARTIST➡ALBUM➡FOLDER➡ TOTAL FILE➡FILE NAME➡… (Displays no information if the file has no song information.)

4. Folder moving Button

- If [FLDR ∨] button is pressed, it moves to the child folder of the current folder and displays the first song in the folder. Press ENTER/TUNE button to move to the folder displayed. It will play the first song in the folder.
- If [FLDR ∧] is button pressed, it moves to the parent folder and displays the first song in the folder. Press ENTER/TUNE button to move to the folder displayed. It will play the first song in the folder.

5. ENTER/TUNE Button

Turn this button clockwise to display the songs next to the currently played song.

Turn the button counterclockwise to display the songs before the currently played song.

Press the button to skip to the selected song.

6. RANDOM Button

Press the button for less than 0.8 second to start or stop the random playback of the songs in the current folder.

Press the button for more than 0.8 second to randomly play the entire songs in the USB device.

Press the button again to cancel the mode.

7. REPEAT Button

Press the button for less than 0.8 second to repeat the song currently played.

Press the button for more than 0.8 second to repeat the entire songs in the USB device.

8. SCAN Button

Plays 10 seconds of each song in the USB device.

Press the button once again to cancel scanning.

FarmaOS.com

⚠ CAUTION IN USING USB DEVICE

- *To use the external USB device, make sure the device is not mounted when starting up the vehicle and mount the device after starting up.*
- *If you start the vehicle when the USB device is mounted, it may damage the USB device. (USB is not ESA)*
- *If the vehicle is started up or turned off while the external USB device is connected, the external USB device may not work.*
- *It may not play inauthentic MP3 or WMA files.*
  1) *It can only play MP3 files with the compression rate between 8Kbps~320Kbps.*
  2) *It can only play WMA music files with the compression rate between 8Kbps~320Kbps.*
- *Take cautions for static electricity when mounting or dismounting the external USB device.*
- *An encoded MP3 PLAYER is not recognizable.*

(Continued)

(Continued)

- *Depending on the condition of the external USB device, the connected external USB device can be unrecognizable.*
- *When the formatted byte/sector setting of External USB devices is not either 512BYTE or 2048BYTE, then the device will not be recognized.*
- *Use only a USB device formatted to FAT 12/16/32.*
- *USB device without USB I/F authentication may not be recognizable.*
- *Make sure the USB connection terminal does not come in contact with human body or any object.*
- *If you repeat mounting or dismounting USB device in a short period of time, it may break the device.*
- *You might hear a strange noise when mounting or dismounting a USB device.*

(Continued)

(Continued)

- *If you dismount the external USB device during playback in USB mode, the external USB device can be damaged or malfunction. Therefore, mount the external USB device when the engine is turned off or in another mode.*
- *Depending on the type and capacity of the external USB device or the type of the files stored in the device, there is a difference in the time taken for recognition of the device, but this is not an indicator of trouble and you only have to wait.*
- *Do not use the USB device for other purposes than playing music files.*
- *Use of USB accessories such as recharger or heater using USB I/F may lower the performance or cause trouble.*
- *If you use devices such as a USB hub you purchased separately, the vehicle's audio system may not recognize the USB device. Connect the USB device directly to the multimedia terminal of the vehicle.*

(Continued)

امداد خودرو فارما
تلفن: ۸۸۸۰۱۸۸۸-۰۲۱
FarmaDOS.com

(Continued)

- *If USB device is divided by logical drives, only the music files on the highest-priority drive are recognized by car audio.*
- *Devices such as MP3 Player/ Cellular phone/Digital camera those are not recognizable by standard USB I/F can be unrecognizable.*
- *USB devices other than standardized goods (METAL COVER TYPE USB) can be unrecognizable.*
- *USB flash memory reader (such as CF, SD, microSD, etc.) or external-HDD type devices can be unrecognizable.*
- *Music files protected by DRM (DIGITAL RIGHTS MANAGEMENT) are not recognizalbe.*
- *The data in the USB memory may lost while using this AUDIO, It is recommeded to back up important data on a personal.*

(Continued)

(Continued)

- *Please avoid using USB memory products which can be used as key chains or cellular phone accessories as they could cause damage to the USB jack. Please make certain only to use plug type connector products as shown below.*



ایران خودرو فارما
تلفن شبانه روزی: ۰۲۱-۸۸۸۶۲۰۸۵
FarmaSOS.com

RUNNING iPod (H000) (if equipped)



1. AUX(iPod) Selection Button
2. Track Moving Button
3. INFO Button
4. Category Selection Button
5. ENTER/TUNE Button
6. RANDOM Button
7. REPEAT Button

SA-PA710F

FarmaSOS.com

In case the iPod exclusive cable is connected to the multimedia jack inside the consol on the right hand side of the driver's seat. When the iPod is connected, the 'iPod' icon will be displayed on the top right corner of the display screen.

1. AUX(iPod) Selection Button

If iPod is connected, it switches to the iPod mode from the CD mode to play the song files stored in the iPod.

If there are no CD and AUX(iPod), it displays 'NO MEDIA'.

2. Track Moving Button

- Press the [SEEK ⏬] button for less than 0.8 second to play from the beginning of the song currently played.

  Press the button for less than 0.8 second and press it again within 1 second to play the previous track.

  Press the button for 0.8 second or longer to play the song in reverse direction in fast speed.

- Press the [SEEK ⏫] button for less than 0.8 second to move to the next track. Press the button for 0.8 second or longer to play the song in forward direction in fast speed.

3. INFO Button

Displays the information of the file currently played in the order of FILE NAME ➡TITLE➡ARTIST➡ALBUM➡FOLDER➡ TOTAL FILE➡FILE NAME➡… (Displays no information if the file has no song information.)

4. Category Selection Button

Moves to the upper category from currently played category of the iPod.

You will be able to search through the lower category of the selected category.

The order of iPod's category is SONG, ALBUMES, ARTISTS, GENRES, and iPod. (Refer to the iPod user's manual for more information)

5. ENTER/TUNE Button

Turn this button clockwise to display the songs next to the currently played song.

Turn the button counterclockwise to display the songs before the currently played song.

Press the button to skip to the selected song.

6. RANDOM Button

Press the button for less than 0.8 second to activate or deactivate the random playback of the songs within the current category.

Press the button for longer than 0.8 second to randomly play all songs in the entire album of the iPod.

Press the button once again to cancel the mode.

7. REPEAT Button

Repeats the song currently played.

✻ NOTICE FOR USING iPod DEVICE

- Some iPod models might not support the communication protocol and the files will not be played. (iPod models supported: Mini, 4G, Photo, Nano, 5G)
- The order of search or playback of songs in the iPod can be different from the order searched in the audio system.
- If the iPod crashes due to its own trouble, reset the iPod. (Reset: Refer to iPod manual)
- iPod may not operate normally on low battery.

⚠ CAUTION IN USING iPod DEVICE

- *You need the power cable exclusive for an iPod in order to operate an iPod with the buttons on the audio system. The PC cable provided by Apple may cause a malfunction and do not use it for vehicle use.*
- *When connecting the device with an iPod cable, push in the jack fully to not to interfere with communication.*
- *When adjusting the sound effects of an iPod and the audio system, the sound effects of both devices will overlap and might reduce or distort the quality of the sound.*
- *Deactivate (turn off) the equalizer function of an iPod when adjusting the audio system's volume, and turn off the equalizer of the audio system when using the equalizer of an iPod.*

(Continued)

(Continued)

- *When the iPod cable is connected, the system can be switched to the AUX mode even without the iPod device and can cause noise. Disconnect the iPod cable when you are not using the iPod device.*
- *When the iPod is not used for the audio system, the iPod cable has to be separate from iPod devices. Origin display of iPod may not be displayed.*

FarmaSOS.com

Before driving / 5-3
Key positions / 5-4
Starting the engine / 5-5
Manual transaxle / 5-7
Automatic transaxle / 5-10
Brake system / 5-16
Economical operation / 5-26
Special driving conditions / 5-28
Winter driving / 5-32
Trailer towing / 5-36
Vehicle weight / 5-44

Driving your vehicle

5

امداد خودرو فارما
تلفن شبانه روزی: ۰۲۱-۸۸۸۶۲۰۸۵
FarmaSOS.com

E010000AUN

⚠ WARNING - ENGINE EXHAUST CAN BE DANGEROUS!

Engine exhaust fumes can be extremely dangerous. If, at any time, you smell exhaust fumes inside the vehicle, open the windows immediately.

- **Do not inhale exhaust fumes.**
  Exhaust fumes contain carbon monoxide, a colorless, odorless gas that can cause unconsciousness and death by asphyxiation.
- **Be sure the exhaust system does not leak.**
  The exhaust system should be checked whenever the vehicle is raised to change the oil or for any other purpose. If you hear a change in the sound of the exhaust or if you drive over something that strikes the underneath side of the car, have the exhaust system checked as soon as possible by an authorized KIA dealer.
- **Do not run the engine in an enclosed area.**
  Letting the engine idle in your garage, even with the garage door open, is a hazardous practice. Never run the engine in your garage any longer than it takes to start the engine and back the car out.
- **Avoid idling the engine for prolonged periods with people inside the car.**
  If it is necessary to idle the engine for a prolonged period with people inside the car, be sure to do so only in an open area with the air intake set at "Fresh" and fan operating at one of the higher speeds so fresh air is drawn into the interior.

If you must drive with the tailgate open because you are carrying objects that make this necessary:

1. Close all windows.
2. Open side vents.
3. Set the air intake control at "Fresh", the air flow control at "Floor" or "Face" and the fan at one of the higher speeds.

To assure proper operation of the ventilation system, be sure the ventilation air intakes located just in front of the windshield are kept clear of snow, ice, leaves or other obstructions.

ایران خودرو فارما
تلفن شبانه روزی ۰۲۱-۸۸۱۶۲۱۸۵
FarmaSOS.com

BEFORE DRIVING

E020100AUN

Before entering vehicle

- Be sure that all windows, outside mirror(s), and outside lights are clean.
- Check the condition of the tires.
- Check under the vehicle for any sign of leaks.
- Be sure there are no obstacles behind you if you intend to back up.

E020200AUN

Necessary inspections

Fluid levels, such as engine oil, engine coolant, brake fluid, and washer fluid should be checked on a regular basis, with the exact interval depending on the fluid. Further details are provided in section 7, “Maintenance”.

E020300AUN

Before starting

- Close and lock all doors.
- Position the seat so that all controls are easily reached.
- Adjust the inside and outside rearview mirrors.
- Be sure that all lights work.
- Check all gauges.
- Check the operation of warning lights when the ignition switch is turned to the ON position.
- Release the parking brake and make sure the brake warning light goes out.

For safe operation, be sure you are familiar with your vehicle and its equipment.

⚠ WARNING

All passengers must be properly belted whenever the vehicle is moving. Refer to “Seat belts” in section 3 for more information on their proper use.

⚠ WARNING

Always check the surrounding areas near your vehicle for people, especially children, before putting a car into D (Drive) or R (Reverse).

⚠ WARNING - Driving under the influence of alcohol or drugs

Drinking and driving is dangerous. Drunk driving is the number one contributor to the highway death toll each year. Even a small amount of alcohol will affect your reflexes, perceptions and judgment. Driving while under the influence of drugs is as dangerous or more dangerous than driving drunk.

You are much more likely to have a serious accident if you drink or take drugs and drive.

If you are drinking or taking drugs, don’t drive. Do not ride with a driver who has been drinking or taking drugs. Choose a designated driver or call a cab.

⚠ WARNING

When you intend to park or stop the vehicle with the engine on, be careful not to depress the accelerator pedal for a long period of time. It may overheat the engine or exhaust system and cause fire.

تلفن شبانه روزی: ۰۲۱-۸۸۸۶۲۰۸۵
Fanacar.com

KEY POSITIONS



OSA057001

Ignition switch position

E030201AUN

LOCK

The steering wheel locks to protect against theft. The ignition key can be removed only in the LOCK position. When turning the ignition switch to the LOCK position, push the key inward at the ACC position and turn the key toward the LOCK position.

E030202AUN

ACC (Accessory)

The steering wheel is unlocked and electrical accessories are operative.

✻ NOTICE

If difficulty is experienced turning the ignition switch to the ACC position, turn the key while turning the steering wheel right and left to release the tension.

E030203AUN

ON

The warning lights can be checked before the engine is started. This is the normal running position after the engine is started.

Do not leave the ignition switch ON if the engine is not running to prevent battery discharge.

امداد خودرو فارما
تلفن شبانه روزی: ۰۲۱-۸۸۶۲۰۸۵
FarmaSOS.com

E030204AUN

START

Turn the ignition switch to the START position to start the engine. The engine will crank until you release the key; then it returns to the ON position. The brake warning lamp can be checked in this position.

E030205ASA

⚠ WARNING - Ignition switch

- **Never turn the ignition switch to LOCK or ACC while the vehicle is moving. This would result in loss of directional control and braking function, which could cause an accident.**
- **The anti-theft steering column lock is not a substitute for the parking brake. Before leaving the driver's seat, always make sure the shift lever is engaged in the 1st gear for manual transaxle or P (Park) for the automatic transaxle, set the parking brake fully and shut the engine off. Unexpected and sudden vehicle movement may occur if these precautions are not taken.**

(Continued)

(Continued)

- **Never reach for the ignition switch, or any other controls through the steering wheel while the vehicle is in motion. The presence of your hand or arm in this area could cause a loss of vehicle control, an accident and serious bodily injury or death.**
- **Do not place any movable objects around the driver's seat as they may move while driving, interfere with the driver and lead to an accident.**

STARTING THE ENGINE

E040000AUN-EU

⚠ WARNING

Always wear appropriate shoes when operating your vehicle. Unsuitable shoes (high heels, ski boots,etc.) may interfere with your ability to use the brake and accelerator pedal.

E040100AUN

Starting the gasoline engine

1. Make sure the parking brake is applied.
2. **Manual Transaxle** - Depress the clutch pedal fully and shift the transaxle into Neutral. Keep the clutch pedal and brake pedal depressed while turning the ignition switch to the start position.
   Automatic Transaxle - Place the transaxle shift lever in P (Park). Depress the brake pedal fully.
   You can also start the engine when the shift lever is in the N (Neutral) position.
3. Turn the ignition switch to START and hold it there until the engine starts (a maximum of 10 seconds), then release the key.
4. In extremely cold weather (below -18°C / 0°F) or after the vehicle has not been operated for several days, let the engine warm up without depressing the accelerator.

Whether the engine is cold or warm, it should be started ***without depressing the accelerator.***

⚠ CAUTION

If the engine stalls while you are in motion, do not attempt to move the shift lever to the P (Park) position. If traffic and road conditions permit, you may put the shift lever in the N (Neutral) position while the vehicle is still moving and turn the ignition switch to the START position in an attempt to restart the engine.

⚠ CAUTION

Do not engage the starter for more than 10 seconds. If the engine stalls or fails to start, wait 5 to 10 seconds before re-engaging the starter. Improper use of the starter may damage it.

FarmaSOS.com

E040101ASA

Starting the diesel engine

To start the diesel engine when the engine is cold, it has to be pre-heated before starting the engine and then have to be warmed up before starting to drive.

1. Make sure the parking brake is applied.
2. **Manual Transaxle** - Depress the clutch pedal fully and shift the transaxle into Neutral. Keep the clutch pedal and brake pedal depressed while turning the ignition switch to the start position.

   Automatic Transaxle - Place the transaxle shift lever in P(park). Depress the brake pedal fully.

   You can also start the engine when the shift lever is in the N(neutral) position.

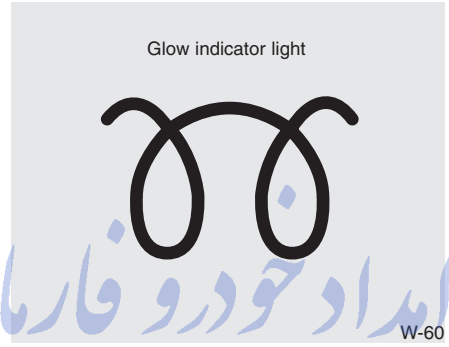

3. Turn the ignition switch to the ON position to pre-heat the engine. Then the glow indicator light will illuminate.
4. If the glow indicator light goes out, turn the ignition switch to the START position and hold it there until the engine starts (a maximum of 10 seconds), then release the key.

✻ NOTICE

If the engine does not start within 10 seconds after the preheating is completed, turn the ignition switch once more to the LOCK position for 10 seconds, and then to the ON position, in order to preheat again.

Starting and stopping the engine for turbocharger intercooler (if equipped)

1. Do not race or accelerate the engine immediately after starting.

   If the engine is cold, idle for several seconds before sufficient lubrication is ensured in the turbocharger unit.
2. After high speed or extended driving, requiring a heavy engine load, idle the engine about 1 minute before turning it off.

   This idle time will allow the turbocharger to cool prior to shutting the engine off.

⚠ CAUTION

Do not turn the engine off immediately after it has been subjected to a heavy load. Doing so may cause severe damage to the engine or turbocharger unit.

ایداد خودرو فارما
FarmaSOS.com

MANUAL TRANSAXLE (IF EQUIPPED)

Type A

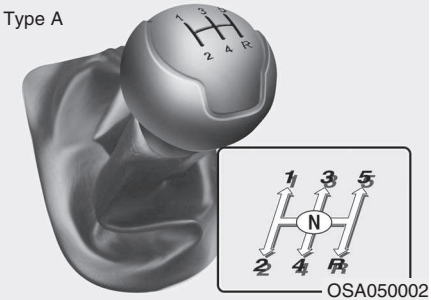

OSA050002

Type B

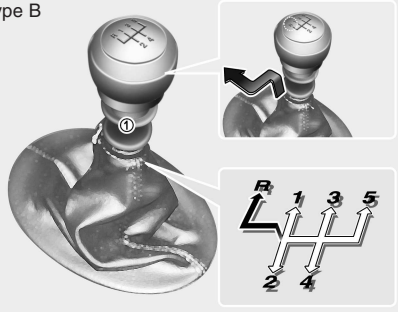

The shift lever can be moved without pulling the ring (1).

The ring (1) must be pulled while moving the shift lever.

5SAA4005

E050000ASA

E050100ASA

Manual transaxle operation

The manual transaxle has 5 forward gears.

This shift pattern is imprinted on the shift knob. The transaxle is fully synchronized in all forward gears so shifting to either a higher or a lower gear is easily accomplished.

Press the clutch pedal down fully while shifting, then release it slowly.

The gearshift lever must be returned to the neutral position before shifting into R (Reverse).

Make sure the vehicle is completely stopped before shifting into R (Reverse).

Never operate the engine with the tachometer (rpm) in the red zone.

A special safety feature prevents inadvertent shifting from 5 (Fifth) to R (Reverse). (Type A)

⚠ CAUTION

- ***When downshifting from fifth gear to fourth gear, caution should be taken not to inadvertently press the gear shift lever sideways in such a manner that second gear is engaged. Such a drastic downshift may cause the engine speed to increase to the point that the tachometer will enter the red-zone. Such overrevving of the engine may possibly cause engine damage.***
- ***Do not downshift more than 2 gears or downshift the gear when the engine is running at high speed (5,000 RPM or higher). Such a downshifting may damage the engine.***

PartsSOS.com

- During cold weather, shifting may be difficult until the transaxle lubricant has warmed up. This is normal and not harmful to the transaxle.
- If you've come to a complete stop and it's hard to shift into 1st or R(Reverse), put the shift lever in N(Neutral) position and release the clutch. Press the clutch pedal back down, and then shift into 1st or R(Reverse) gear position.

⚠ CAUTION

- ***To avoid premature clutch wear and damage, do not drive with your foot resting on the clutch pedal. Also, don't use the clutch to hold the vehicle stopped on an uphill grade, while waiting for a traffic light, etc.***
- ***Do not use the shift lever as a handrest during driving, as this can result in premature wear of the transaxle shift forks.***

⚠ WARNING

- **Before leaving the driver's seat, always set the parking brake fully and shut the engine off. Then make sure the transaxle is shifted into 1st gear when the vehicle is parked on a level or uphill grade, and shifted into R (Reverse) on a downhill grade. Unexpected and sudden vehicle movement can occur if these precautions are not followed in the order identified.**
- **If your vehicle has a manual transaxle not equipped with a ignition lock switch, it may move and cause a serious accident when starting the engine without depressing the clutch pedal while the parking brake is released and the shift lever not in the N(Neutral) position.**

E050101AUN

Using the clutch

The clutch should be pressed all the way to the floor before shifting, then released slowly. The clutch pedal should always be fully released while driving. Do not rest your foot on the clutch pedal while driving. This can cause unnecessary wear. Do not partially engage the clutch to hold the car on an incline. This causes unnecessary wear. Use the foot brake or parking brake to hold the car on an incline. Do not operate the clutch pedal rapidly and repeatedly.

FamiloS.com

E050102ASA

Downshifting

When you must slow down in heavy traffic or while driving up steep hills, downshift before the engine starts to labor. Downshifting reduces the chance of stalling and gives better acceleration when you need to increase your speed again. When the vehicle is traveling down steep hills, downshifting helps maintain safe speed and prolongs brake life.

E050200AUN

Good driving practices

- Never take the car out of gear and coast down a hill. This is extremely hazardous. Always leave the car in gear.
- Don't "ride" the brakes. This can cause them to overheat and malfunction. Instead, when you are driving down a long hill, slow down and shift to a lower gear. When you do this, engine braking will help slow the car.
- Slow down before shifting to a lower gear. This will help avoid over-revving the engine, which can cause damage.
- Slow down when you encounter cross winds. This gives you much better control of your car.
- Be sure the car is completely stopped before you attempt to shift into reverse. The transaxle can be damaged if you do not. To shift into reverse, depress the clutch, move the shift lever to neutral, wait 3 seconds, then shift to the reverse position.
- Exercise extreme caution when driving on a slippery surface. Be especially careful when braking, accelerating or shifting gears. On a slippery surface, an abrupt change in vehicle speed can cause the drive wheels to lose traction and the vehicle to go out of control.

FarmaSOS.com

⚠ WARNING

- **Always buckle-up! In a collision, an unbelted occupant is significantly more likely to be seriously injured or killed than a properly belted occupant.**
- **Avoid high speeds when cornering or turning.**
- **Do not make quick steering wheel movements, such as sharp lane changes or fast, sharp turns.**
- **The risk of a rollover is greatly increased if you lose control of your vehicle at highway speed.**
- **Loss of control often occurs if two or more wheels drop off the roadway and the driver oversteers to reenter the roadway.**
- **In the event your vehicle leaves the roadway, do not steer sharply. Instead, slow down before pulling back into the travel lanes.**
- **Never exceed posted speed limits.**

AUTOMATIC TRANSAXLE (IF EQUIPPED)

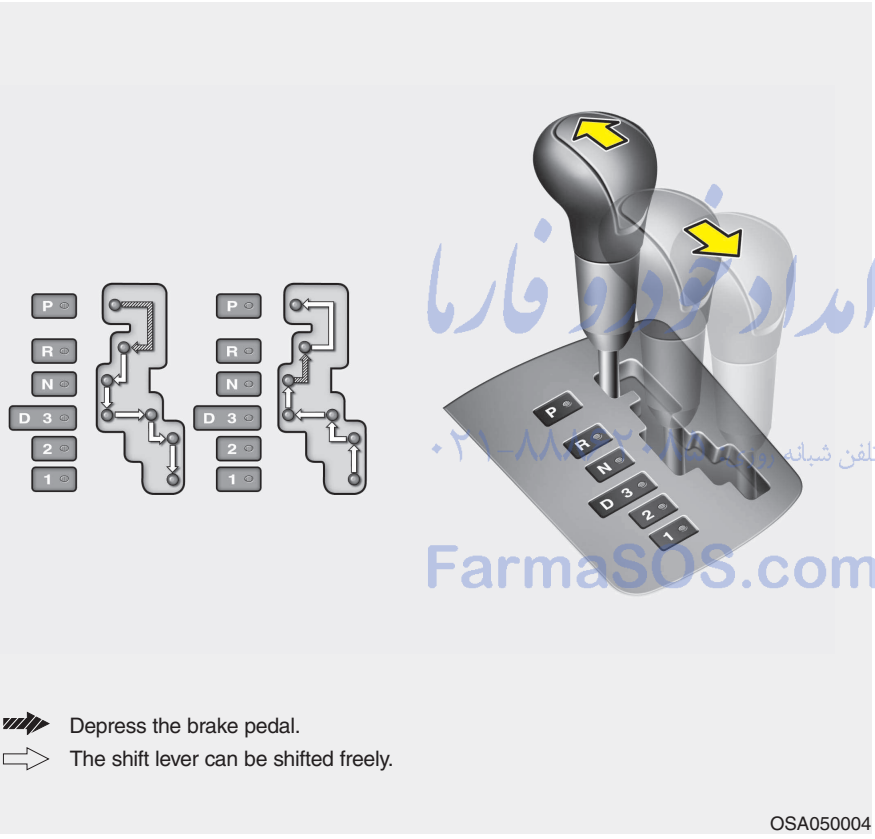

E060000APA

E060100APA

Automatic transaxle operation

The automatic transaxle has 4 forward speeds and one reverse speed. The individual speeds are selected automatically, depending on the position of the shift lever.

To move the shift lever from the P (Park) position, the brake pedal must be depressed.

✻ NOTICE

The first few shifts on a new vehicle, if the battery has been disconnected, may be somewhat abrupt. This is a normal condition, and the shifting sequence will adjust after shifts are cycled a few times by the TCM (Transaxle Control Module) or PCM (Powertrain Control Module).

امداد خودرو فارما
تلفن شبانه روزی ۰۲۱-۸۸۳۲۰۰۰۰
FarmaSOS.com

For smooth operation, depress the brake pedal when shifting from N (Neutral) to a forward or reverse gear.

⚠ WARNING - Automatic transaxle

- **Always check the surrounding areas near your vehicle for people, especially children, before shifting a car into D (Drive) or R (Reverse).**
- **Before leaving the driver's seat, always make sure the shift lever is in the P (Park) position; then set the parking brake fully and shut the engine off. Unexpected and sudden vehicle movement can occur if these precautions are not followed in the order identified.**

⚠ CAUTION

- ***To avoid damage to your transaxle, do not accelerate the engine in R (Reverse) or any forward gear position with the brakes on.***
- ***When stopped on an incline, do not hold the vehicle stationary with engine power. Use the service brake or the parking brake.***
- ***Do not shift from N (Neutral) or P (Park) into D (Drive), or R (Reverse) when the engine is above idle speed.***

تلفن شبانه روزی: ۰۲۱-۸۸۸۶۲۰۸۵
FarmaSOS.com

E060101ASA

Transaxle ranges

P (Park)

Always come to a complete stop before shifting into P (Park). This position locks the transaxle and prevents the front wheels from rotating.

⚠ WARNING

- **Shifting into P (Park) while the vehicle is in motion will cause the drive wheels to lock which will cause you to lose control of the vehicle.**
- **Do not use the P (Park) position in place of the parking brake. Always make sure the shift lever is latched in the P (Park) position and set the parking brake fully.**
- **Never leave a child unattended in a vehicle.**

⚠ CAUTION

The transaxle may be damaged if you shift into P (Park) while the vehicle is in motion.

R (Reverse)

Use this position to drive the vehicle backward.

> ⚠ **CAUTION**
>
> ***Always come to a complete stop before shifting into or out of R (Reverse); you may damage the transaxle if you shift into R while the vehicle is in motion, except when "Rocking the vehicle" explained in this section.***

N (Neutral)

The wheels and transaxle are not engaged. The vehicle will roll freely even on the slightest incline unless the parking brake or service brakes are applied.

D (Drive)

This is the normal forward driving position. The transaxle will automatically shift through a 4-gear sequence, providing the best fuel economy and power.

For extra power when passing another vehicle or climbing grades, depress the accelerator fully, at which time the transaxle will automatically downshift to the next lower gear.

> ✻ **NOTICE**
>
> **Always come to a complete stop before shifting into D (Drive).**

امداد خودرو فارما
تلفن شبانه روزی: ۰۲۱-۸۸۸۴۲۰۸۵
Farma308.com

2 (Second gear)

Use 2 (Second gear) for more power when climbing hills and for increased braking when going down hills. This position also helps reduce wheel spin on slippery surfaces. When the shift lever is placed in 2 (Second gear), the transaxle will automatically shift from first to second gear.

1 (First gear)

Move the shift lever to this position in hard pulling situations and for climbing steep grades.

> ⚠ **CAUTION**
>
> ***Do not exceed the recommended maximum speed in 2 (Second gear) or 1 (First gear). Operating the vehicle above the maximum speed recommended for 2 (Second gear) or 1 (First gear) may cause excessive heat which could damage the automatic transaxle.***

E060102ASA

Shift lock system (if equipped)

For your safety, the automatic transaxle has a shift lock system which prevents shifting the transaxle from P (Park) into R (Reverse) unless the brake pedal is depressed.

To shift the transaxle from P (Park) into R (Reverse):

1. Depress and hold the brake pedal.
2. Move the shift lever.

If the brake pedal is repeatedly depressed and released with the shift lever in the P (Park) position, a chattering noise near the shift lever may be heard. This is a normal condition.

⚠ WARNING

Always fully depress the brake pedal before and while shifting out of the P (Park) position into another position to avoid inadvertent motion of the vehicle which could injure persons in or around the car.

امداد خودرو فارما
تلفن شبانه روزی: ۰۲۱-۸۸۸۶۲۰۸۵
FarmaSOS.com

E060103AUN

Ignition key interlock system (if equipped)

The ignition key cannot be removed unless the shift lever is in the P (Park) position. If the ignition switch is in any other position, the key cannot be removed.

E060200AEN

Good driving practices

- Never move the gear shift lever from P (Park) or N (Neutral) to any other position with the accelerator pedal depressed.
- Never move the gear shift lever into P (Park) when the vehicle is in motion.
- Be sure the car is completely stopped before you attempt to shift into R (Reverse).
- Never take the car out of gear and coast down a hill. This may be extremely hazardous. Always leave the car in gear when moving.
- Do not "ride" the brakes. This can cause them to overheat and malfunction. Instead, when you are driving down a long hill, slow down and shift to a lower gear. When you do this, engine braking will help slow the car.
- Slow down before shifting to a lower gear. Otherwise, the lower gear may not be engaged.
- Always use the parking brake. Do not depend on placing the transaxle in P (Park) to keep the car from moving.
- Exercise extreme caution when driving on a slippery surface. Be especially careful when braking, accelerating or shifting gears. On a slippery surface, an abrupt change in vehicle speed can cause the drive wheels to lose traction and the vehicle to go out of control.
- Optimum vehicle performance and economy is obtained by smoothly depressing and releasing the accelerator pedal.

فارسوس
تلفن شبانه روزی: ۰۲۱-۸۸۸۶۲۰۸۵
FarmaSOS.com

⚠ WARNING

- **Always buckle-up! In a collision, an unbelted occupant is significantly more likely to be seriously injured or killed than a properly belted occupant.**
- **Avoid high speeds when cornering or turning.**
- **Do not make quick steering wheel movements, such as sharp lane changes or fast, sharp turns.**
- **The risk of a rollover is greatly increased if you lose control of your vehicle at highway speed.**
- **Loss of control often occurs if two or more wheels drop off the roadway and the driver oversteers to reenter the roadway.**
- **In the event your vehicle leaves the roadway, do not steer sharply. Instead, slow down before pulling back into the travel lanes.**
- **Never exceed posted speed limits.**

⚠ WARNING

If your vehicle becomes stuck in snow, mud, sand, etc., then you may attempt to rock the vehicle free by moving it forward and backward. Do not attempt this procedure if people or objects are anywhere near the vehicle. During the rocking operation the vehicle may suddenly move forward of backward as it becomes unstuck, causing injury or damage to nearby people or objects.

E060203ASA

Moving up a steep grade from a standing start

To move up a steep grade from a standing start, depress the brake pedal and shift the shift lever to D (Drive). Select the appropriate gear depending on load weight and steepness of the grade, and release the parking brake. Depress the accelerator gradually while releasing the service brakes.

When accelerating from a stop on a steep hill, the vehicle may have a tendency to roll backwards. Shifting the shift lever into 2 (Second gear) will help prevent the vehicle from rolling backwards.

تلفن شبانه روزی: ۰۲۱-۸۸۸۶۲۰۸۵

FarmaSOS.com

BRAKE SYSTEM

E070100AUN

Power brakes

Your vehicle has power-assisted brakes that adjust automatically through normal usage.

In the event the power-assisted brakes lose power because of a stalled engine or some other reason, you can still stop your vehicle by applying greater force to the brake pedal than you normally would. The stopping distance, however, will be longer.

When the engine is not running, the reserve brake power is partially depleted each time the brake pedal is applied. Do not pump the brake pedal when the power assist has been interrupted.

Pump the brake pedal only when necessary to maintain steering control on slippery surfaces.

⚠ WARNING - Brakes

- **Do not drive with your foot resting on the brake pedal. This will create abnormal high brake temperatures, excessive brake lining and pad wear, and increased stopping distances.**
- **When descending a long or steep hill, shift to a lower gear and avoid continuous application of the brakes. Continuous brake application will cause the brakes to overheat and could result in a temporary loss of braking performance.**
- **Wet brakes may impair the vehicle's ability to sefely slow down; the vehicle may also pull to one side when the brakes are applied. Applying the brakes lightly will indicate whether they have been affected in this way. Always test your brakes in this fashion after driving through deep water. To dry the brakes, apply them lightly while maintaining a safe forward speed until brake performance returns to normal.**

E070101AUN

In the event of brake failure

If service brakes fail to operate while the vehicle is in motion, you can make an emergency stop with the parking brake. The stopping distance, however, will be much greater than normal.

⚠ WARNING - Parking brake

Applying the parking brake while the vehicle is moving at normal speed can cause a sudden loss of control of the vehicle. If you must use the parking brake to stop the vehicle, use great caution in applying the brake.

E070102AUN

Disc brakes wear indicator

Your vehicle has disc brakes.

When your brake pads are worn and new pads are required, you will hear a high-pitched warning sound from your front brakes or rear brakes. You may hear this sound come and go or it may occur whenever you depress the brake pedal.

Please remember that some driving conditions or climates may cause a brake squeal when you first apply (or lightly apply) the brakes. This is normal and does not indicate a problem with your brakes.

⚠ CAUTION

- ***To avoid costly brake repairs, do not continue to drive with worn brake pads.***
- ***Always replace brake pads as complete front or rear axle sets.***

⚠ WARNING - Brake wear

This brake wear warning sound means your vehicle needs service. If you ignore this audible warning, you will eventually lose braking performance, which could lead to a serious accident.

E070106APA

Rear drum brakes (if equipped)

Your rear drum brakes do not have wear indicators. Therefore, have the rear brake linings inspected if you hear a rear brake rubbing noise. Also have your rear brakes inspected each time you change or rotate your tires and when you have the front brakes replaced.

FarmaSOS.com

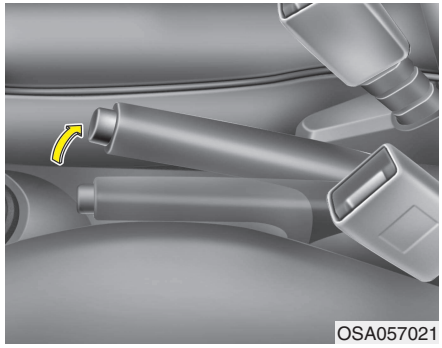

OSA057021

Parking brake

E070201AFD-SA

Applying the parking brake

To engage the parking brake, first apply the foot brake and then without pressing the release button in, pull the parking brake lever up as far as possible. In addition it is recommended that when parking the vehicle on a gradient, the shift lever should be positioned in the appropriate low gear on manual transaxle vehicles or in the P (Park) position for automatic transaxle vehicles.

⚠ CAUTION

Driving with the parking brake applied will cause excessive brake pad (or lining) and brake rotor wear.

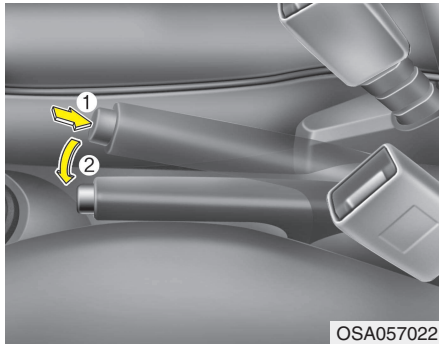

E070202AFD-U1

Releasing the parking brake

To release the parking brake, first apply the foot brake and pull up the parking brake lever slightly. Secondly press the release button (1) and lower the parking brake lever (2) while holding the button.

⚠ WARNING

- **To prevent unintentional movement when stopped and leaving the vehicle, do not use the shift lever in place of the parking brake. Set the parking brake AND make sure the shift lever is securely positioned in 1st (First) gear or R (Reverse) for manual transaxle equipped vehicles and in P (Park) for automatic transaxle equipped vehicles.**
- **Never allow anyone who is unfamiliar with the vehicle to touch the parking brake. If the parking brake is released unintentionally, serious injury may occur.**
- **All vehicles should always have the parking brake fully engaged when parking to avoid inadvertent movement of the car which can injure occupants or pedestrians.**

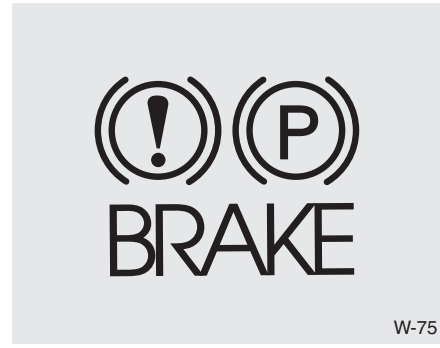

Check the brake warning light by turning the ignition switch ON (do not start the engine). This light will be illuminated when the parking brake is applied with the ignition switch in the START or ON position.

Before driving, be sure the parking brake is fully released and the brake warning light is off.

If the brake warning light remains on after the parking brake is released, there may be a malfunction in the brake system. Immediate attention is necessary.

If at all possible, cease driving the vehicle immediately. If that is not possible, use extreme caution while operating the vehicle and only continue to drive the vehicle until you can reach a safe location or repair shop.

E070300ASA

Anti-lock brake system (ABS) (if equipped)

⚠ WARNING

ABS (or ESP) will not prevent accidents due to improper or dangerous driving maneuvers. Even though vehicle control is improved during emergency braking, always maintain a safe distance between you and objects ahead. Vehicle speeds should always be reduced in extreme road conditions.

The braking distance for cars equipped with an anti-lock braking system (or Electronic Stability Program System) may be longer than for those without it in the following road conditions.

During these conditions the vehicle should be driven at reduced speed:

- **Rough, gravel or snow-covered roads.**
- **With tire chains installed.**

(Continued)

(Continued)

- **On roads where the road surface is pitted or has different surface height.**

The safety features of an ABS (or ESP) equipped vehicle should not be tested by high speed driving or cornering. This could endanger the safety of yourself or others.

امداد خودرو فارما
تلفن شبانه روزی: ۰۲۱-۸۸۸۶۲۰۸۵
FarmaSOS.com

The ABS continuously senses the speed of the wheels. If the wheels are going to lock, the ABS system repeatedly modulates the hydraulic brake pressure to the wheels.

When you apply your brakes under conditions which may lock the wheels, you may hear a “tik-tik” sound from the brakes, or feel a corresponding sensation in the brake pedal. This is normal and it means your ABS is active.

In order to obtain the maximum benefit from your ABS in an emergency situation, do not attempt to modulate your brake pressure and do not try to pump your brakes. Press your brake pedal as hard as possible or as hard as the situation warrants and allow the ABS to control the force being delivered to the brakes.

✻ NOTICE

A click sound may be heard in the engine compartment when the vehicle begins to move after the engine is started. These conditions are normal and indicate that the anti-lock brake system is functioning properly.

- Even with the anti-lock brake system, your vehicle still requires sufficient stopping distance. Always maintain a safe distance from the vehicle in front of you.
- Always slow down when cornering. The anti-lock brake system cannot prevent accidents resulting from excessive speeds.
- On loose or uneven road surfaces, operation of the anti-lock brake system may result in a longer stopping distance than for vehicles equipped with a conventional brake system.



W-78

⚠ CAUTION

- ***If the ABS warning light is on and stays on, you may have a problem with the ABS. In this case, however, your regular brakes will work normally.***
- ***The ABS warning light will stay on for approximately 3 seconds after the ignition switch is ON. During that time, the ABS will go through self-diagnosis and the light will go off if everything is normal. If the light stays on, you may have a problem with your ABS. Contact an authorized KIA dealer as soon as possible.***

⚠ CAUTION

- ***When you drive on a road having poor traction, such as an icy road, and have to operate your brakes continuously, the ABS will be active continuously and the ABS warning light may illuminate. Pull your car over to a safe place and stop the engine.***
- ***Restart the engine. If the ABS warning light is off, then your ABS system is normal. Otherwise, you may have a problem with the ABS. Contact an authorized KIA dealer as soon as possible.***

✻ NOTICE

When you jump start your vehicle because of a drained battery, the engine may not run as smoothly and the ABS warning light may turn on at the same time. This happens because of low battery voltage. It does not mean your ABS is malfunctioning.

- **Do not pump your brakes!**
- **Have the battery recharged before driving the vehicle.**

امداد خودرو فارما
Farma205.com

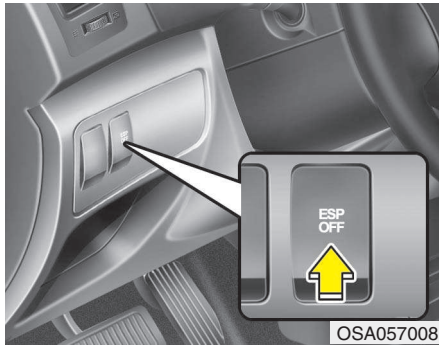

OSA057008

E070500ASA

Electronic stability program (ESP) (If equipped)

The Electronic Stability Program (ESP) system is designed to stabilize the vehicle during cornering maneuvers. ESP checks where you are steering and where the vehicle is actually going. ESP applies the brakes at individual wheels and intervenes with the engine management system to stabilize the vehicle.

⚠ WARNING

Never drive too fast according to road conditions or too quickly when cornering. Electronic stability program (ESP) will not prevent accidents. Excessive speed in turns, abrupt maneuvers and hydroplaning on wet surfaces can still result in serious accidents. Only a safe and attentive driver can prevent accidents by avoiding maneuvers that cause the vehicle to lose traction. Even with ESP installed, always follow all the normal precautions for driving - including driving at safe speeds for the conditions.

The Electronic Stability Program (ESP) system is an electronic system designed to help the driver maintain vehicle control under adverse conditions. It is not a substitute for safe driving practices. Factors including speed, road conditions and driver steering input can all affect whether ESP will be effective in preventing a loss of control. It is still your responsibility to drive and corner at reasonable speed and to leave a sufficient margin of safety.

When you apply your brakes under conditions which may lock the wheels, you may hear a “tik-tik” sound from the brakes, or feel a corresponding sensation in the brake pedal. This is normal and it means your ESP is active.

✻ NOTICE

A click sound may be heard in the engine compartment when the vehicle begins to move after the engine is started. These conditions are normal and indicate that the Electronic Stability Program System is functioning properly.

FarmaSOS.com

E070501AUN-EE

ESP operation

ESP ON condition



- When the ignition is turned ON, ESP and ESP OFF indicator lights illuminate for approximately 3 seconds, then ESP is turned on.
- Press the ESP OFF button for at least half a second after turning the ignition ON to turn ESP off. (ESP OFF indicator will illuminate). To turn the ESP on, press the ESP OFF button (ESP OFF indicator light will go off).
- When starting the engine, you may hear a slight ticking sound. This is the ESP performing an automatic system self-check and does not indicate a problem.

When operating



When the ESP is in operation, ESP indicator light blinks.

- When the Electronic Stability Program is operating properly, you can feel a slight pulsation in the vehicle. This is only the effect of brake control and indicates nothing unusual.
- When moving out of the mud or slippery road, pressing the accelerator pedal may not cause the engine rpm (revolutions per minute) to increase.

تلفن شبانه روزی: ۰۲۱-۸۸۸۶۲۰۸۵
FarmaSOS.com

E070502AUN-EE

ESP operation off

ESP OFF state



- To cancel ESP operation, press the ESP OFF button (ESP OFF indicator light illuminates).
- If the ignition switch is turned to LOCK position when ESP is off, ESP remains off. Upon restarting the engine, the ESP will automatically turn on again.

■ ESP indicator light (blinks)

ESP

■ ESP OFF indicator light (comes on)

ESP OFF

E070503AEN-EE

Indicator light

When the ignition switch is turned ON, the indicator light illuminates, then goes off if ESP system is operating normally.

The ESP indicator light blinks whenever ESP is operating.

The ESP OFF indicator light comes on when either the ESP is turned off with the button, or ESP fails to operate when turned on.

⚠ CAUTION

Driving with varying tire or wheel sizes may cause the ESP system to malfunction. When replacing tires, make sure they are the same size as your original tires.

⚠ WARNING

The Electronic Stability Program system is only a driving aid; use precautions for safe driving by slowing down on curved, snowy, or icy roads. Drive slowly and don't attempt to accelerate whenever the ESP indicator light is blinking, or when the road surface is slippery.

FarmaSOS.com

E070504AEN-EE

ESP OFF usage

When driving

- It's a good idea to keep the ESP turned on for daily driving whenever possible.
- To turn ESP off while driving, press the ESP OFF button while driving on a flat road surface.

⚠ WARNING

Never press the ESP OFF button while ESP is operating (ESP indicator light blinks).

If ESP is turned off while ESP is operating, the vehicle may slip out of control.

✻ NOTICE

- **When operating the vehicle on a dynamometer, ensure that the ESP is turned off (ESP OFF light illuminated). If the ESP is left on, it may prevent the vehicle speed from increasing, and result in false diagnosis.**
- **Turning the ESP off does not affect the ABS or brake system operation.**

E070600ASA

Good braking practices

- Check to be sure the parking brake is not engaged and the parking brake indicator light is out before driving away.
- Driving through water may get the brakes wet. They can also get wet when the car is washed. Wet brakes can be dangerous! Your car will not stop as quickly if the brakes are wet. Wet brakes may cause the car to pull to one side.

  To dry the brakes, apply the brakes lightly until the braking action returns to normal, taking care to keep the car under control at all times. If the braking action does not return to normal, stop as soon as it is safe to do so and call an authorized KIA dealer for assistance.
- Don't coast down hills with the car out of gear. This is extremely hazardous. Keep the car in gear at all times, use the brakes to slow down, then shift to a lower gear so that engine braking will help you maintain a safe speed.
- Don't "ride" the brake pedal. Resting your foot on the brake pedal while driving can be dangerous because the brakes might overheat and lose their effectiveness. It also increases the wear of the brake components.
- If a tire goes flat while you are driving, apply the brakes gently and keep the car pointed straight ahead while you slow down. When you are moving slowly enough for it to be safe to do so, pull off the road and stop in a safe place.
- If your car is equipped with an automatic transaxle, don't let your car creep forward. To avoid creeping forward, keep your foot firmly on the brake pedal when the car is stopped.
- Be cautious when parking on a hill. Firmly engage the parking brake and place the gear selector lever in P (automatic transaxle) or in first or reverse gear (manual transaxle). If your car is facing downhill, turn the front wheels into the curb to help keep the car from rolling. If your car is facing uphill, turn the front wheels away from the curb to help keep the car from rolling. If there is no curb or if it is required by other conditions to keep the car from rolling, block the wheels.

FarmaSOS.com

- Under some conditions your parking brake can freeze in the engaged position. This is most likely to happen when there is an accumulation of snow or ice around or near the rear brakes or if the brakes are wet. If there is a risk that the parking brake may freeze, apply it only temporarily while you put the gear selector lever in P (automatic transaxle) or in first or reverse gear (manual transaxle) and block the rear wheels so the car cannot roll. Then release the parking brake.
- Do not hold the vehicle on the upgrade with the accelerator pedal. This can cause the transaxle to overheat. Always use the brake pedal or parking brake.

امداد خودرو فارما
تلفن شبانه روزی: ۰۲۱-۸۸۸۶۲۰۸۵
FarmaSOS.com

ECONOMICAL OPERATION

E100000ASA

Your vehicle's fuel economy depends mainly on your style of driving, where you drive and when you drive.

Each of these factors affects how many kilometers (miles) you can get from a liter (gallon) of fuel. To operate your vehicle as economically as possible, use the following driving suggestions to help save money in both fuel and repairs:

- Drive smoothly. Accelerate at a moderate rate. Don't make "jack-rabbit" starts or full-throttle shifts and maintain a steady cruising speed. Don't race between stoplights. Try to adjust your speed to the traffic so you don't have to change speeds unnecessarily. Avoid heavy traffic whenever possible. Always maintain a safe distance from other vehicles so you can avoid unnecessary braking. This also reduces brake wear.
- Drive at a moderate speed. The faster you drive, the more fuel your car uses. Driving at a moderate speed, especially on the highway, is one of the most effective ways to reduce fuel consumption.
- Don't "ride" the brake pedal. This can increase fuel consumption and also increase wear on these components. In addition, driving with your foot resting on the brake pedal may cause the brakes to overheat, which reduces their effectiveness and may lead to more serious consequences.
- Take care of your tires. Keep them inflated to the recommended pressure. Incorrect inflation, either too much or too little, results in unnecessary tire wear. Check the tire pressures at least once a month.
- Be sure that the wheels are aligned correctly. Improper alignment can result from hitting curbs or driving too fast over irregular surfaces. Poor alignment causes faster tire wear and may also result in other problems as well as greater fuel consumption.
- Keep your car in good condition. For better fuel economy and reduced maintenance costs, maintain your car in accordance with the maintenance schedule in section 7. If you drive your car in severe conditions, more frequent maintenance is required (see section 7 for details).
- Keep your car clean. For maximum service, your vehicle should be kept clean and free of corrosive materials. It is especially important that mud, dirt, ice, etc. not be allowed to accumulate on the underside of the car. This extra weight can result in increased fuel consumption and also contribute to corrosion.
- Travel lightly. Don't carry unnecessary weight in your car. Weight reduces fuel economy.
- Don't let the engine idle longer than necessary. If you are waiting (and not in traffic), turn off your engine and restart only when you're ready to go.

FarmaSOS.com

- Remember, your vehicle does not require extended warm-up. After the engine has started, allow the engine to run for 10 to 20 seconds prior to placing the vehicle in gear. In very cold weather, however, give your engine a slightly longer warm-up period.
- Don't "lug" or "over-rev" the engine. Lugging is driving too slowly in a very high gear resulting in engine bucking. If this happens, shift to a lower gear. Over-revving is racing the engine beyond its safe limit. This can be avoided by shifting at the recommended speed.
- Use your air conditioning sparingly. The air conditioning system is operated by engine power so your fuel economy is reduced when you use it.
- Open windows at high speed can reduce fuel economy.
- Fuel economy is less in crosswinds and headwinds. To help offset some of this loss, slow down when driving in these conditions.

Keeping a vehicle in good operating condition is important both for economy and safety. Therefore, have an authorized KIA dealer perform scheduled inspections and maintenance.

ایران خودرو دیزل
تلفن شبانه روزی: ۰۲۱-۸۸۸۶۲۰۸۵
FarmaSOS.com

⚠ WARNING - Engine off during motion

Never turn the engine off to coast down hills or anytime the vehicle is in motion. The power steering and power brakes will not function properly without the engine running. Instead, keep the engine on and downshift to an appropriate gear for engine braking effect. In addition, turning off the ignition while driving could engage the steering wheel lock resulting in loss of vehicle steering which could cause serious injury or death.

SPECIAL DRIVING CONDITIONS

E110100ASA

Hazardous driving conditions

When hazardous driving conditions are encountered such as water, snow, ice, mud, sand, or similar hazards, follow these suggestions:

- Drive cautiously and allow extra distance for braking.
- Avoid sudden braking or steering.
- When braking with non-ABS brakes pump the brake pedal with a light up-and-down motion until the vehicle is stopped.

⚠ WARNING - ABS

Do not pump the brake pedal on a vehicle equipped with ABS.

- If stalled in snow, mud, or sand, use second gear. Accelerate slowly to avoid spinning the drive wheels.
- Use sand, rock salt, tire chains, or other non-slip material under the drive wheels to provide traction when stalled in ice, snow, or mud.

تلفن شبانه روزی: ۰۲۱-۸۸۸۶۲۰۸۵
FarmaSOS.com

⚠ WARNING - Downshifting

Downshifting with an automatic transaxle, while driving on slippery surfaces can cause an accident. The sudden change in tire speed could cause the tires to skid. Be careful when downshifting on slippery surfaces.

E110200AEN

Rocking the vehicle

If it is necessary to rock the vehicle to free it from snow, sand, or mud, first turn the steering wheel right and left to clear the area around your front wheels. Then, shift back and forth between R (Reverse) and any forward gear in vehicles equipped with an automatic transaxle. Do not race the engine, and spin the wheels as little as possible. If you are still stuck after a few tries, have the vehicle pulled out by a tow vehicle to avoid engine overheating and possible damage to the transaxle.

⚠ CAUTION

Prolonged rocking may cause engine over-heating, transaxle damage or failure, and tire damage.

⚠ WARNING - Spinning tires

Do not spin the wheels, especially at speeds more than 56 km/h (35 mph). Spinning the wheels at high speeds when the vehicle is stationary could cause a tire to overheat which could result in tire damage that may injure bystanders.

✻ NOTICE

The ESP system (if equipped) should be turned OFF prior to rocking the vehicle.

⚠ WARNING

If your vehicle becomes stuck in snow, mud, sand, etc., then you may attempt to rock the vehicle free by moving it forward and backward. Do not attempt this procedure if people or objects are anywhere near the vehicle. During the rocking operation the vehicle may suddenly move forward of backward as it becomes unstuck, causing injury or damage to nearby people or objects.



E110300AUN

Smooth cornering

Avoid braking or gear changing in corners, especially when roads are wet. Ideally, corners should always be taken under gentle acceleration. If you follow these suggestions, tire wear will be held to a minimum.



E110400AUN

Driving at night

Because night driving presents more hazards than driving in the daylight, here are some important tips to remember:

- Slow down and keep more distance between you and other vehicles, as it may be more difficult to see at night, especially in areas where there may not be any street lights.

FarmaSOS.com

- Adjust your mirrors to reduce the glare from other driver's headlights.
- Keep your headlights clean and properly aimed on vehicles not equipped with the automatic headlight aiming feature. Dirty or improperly aimed headlights will make it much more difficult to see at night.
- Avoid staring directly at the headlights of oncoming vehicles. You could be temporarily blind, and it will take several seconds for your eyes to readjust to the darkness.



E110500AUN

Driving in the rain

Rain and wet roads can make driving dangerous, especially if you're not prepared for the slick pavement. Here are a few things to consider when driving in the rain:

- A heavy rainfall will make it harder to see and will increase the distance needed to stop your vehicle, so slow down.
- Keep your windshield wiping equipment in good shape. Replace your windshield wiper blades when they show signs of streaking or missing areas on the windshield.
- If your tires are not in good condition, making a quick stop on wet pavement can cause a skid and possibly lead to an accident. Be sure your tires are in good shape.
- Turn on your headlights to make it easier for others to see you.
- Driving too fast through large puddles can affect your brakes. If you must go through puddles, try to drive through them slowly.
- If you believe you may have gotten your brakes wet, apply them lightly while driving until normal braking operation returns.

E110600AUN

Driving in flooded areas

Avoid driving through flooded areas unless you are sure the water is no higher than the bottom of the wheel hub. Drive through any water slowly. Allow adequate stopping distance because brake performance may be affected.

After driving through water, dry the brakes by gently applying them several times while the vehicle is moving slowly.

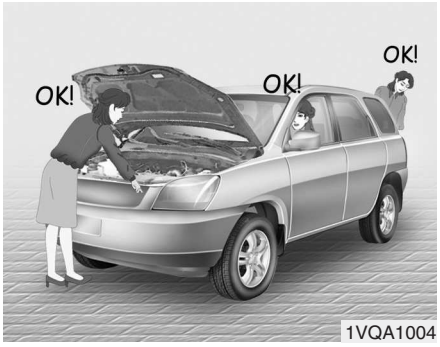

E110700AUN

Highway driving

Tires

Adjust the tire inflation pressures to specification. Low tire inflation pressures will result in overheating and possible failure of the tires.

Avoid using worn or damaged tires which may result in reduced traction or tire failure.

✱ NOTICE

Never exceed the maximum tire inflation pressure shown on the tires.

⚠ WARNING

- **Underinflated or overinflated tires can cause poor handling, loss of vehicle control, and sudden tire failure leading to accidents, injuries, and even death. Always check tires for proper inflation before driving. For proper tire pressures, refer to "Tires and wheels" in section 8.**
- **Driving on tires with no or insufficient tread is dangerous. Worn-out tires can result in loss of vehicle control, collisions, injury, and even death. Worn-out tires should be replaced as soon as possible and should never be used for driving. Always check the tire tread before driving your car. For further information and tread limits, refer to "Tires and wheels" in section 8.**

Fuel, engine coolant and engine oil

High speed travel consumes more fuel than urban motoring. Do not forget to check both engine coolant and engine oil.

Drive belt

A loose or damaged drive belt may overheat the engine.

FarmaSOS.com

WINTER DRIVING



E120000ASA

Severe weather conditions in the winter may cause greater wear and other problems. To minimize the problems of winter driving, you should follow these suggestions:

E120100AUN

Snowy or icy conditions

To drive your vehicle in deep snow, it may be necessary to use snow tires or to install tire chains on your tires. If snow tires are needed, it is necessary to select tires equivalent in size and type of the original equipment tires. Failure to do so may adversely affect the safety and handling of your car. Furthermore, speeding, rapid acceleration, sudden brake applications, and sharp turns are potentially very hazardous practices.

During deceleration, use engine braking to the fullest extent. Sudden brake applications on snowy or icy roads may cause skids. You need to keep sufficient distance between the vehicle in operation in front and your vehicle. Also, apply the brake gently. It should be noted that installing tire chains on the tire will provide greater driving force, but will not prevent side skids.

✻ NOTICE

Tire chains are not legal in all countries. Check the county laws before fitting tire chains.

E120101AUN

Snow tires

If you mount snow tires on your vehicle, make sure they are radial tires of the same size and load range as the original tires. Mount snow tires on all four wheels to balance your vehicle's handling in all weather conditions. Keep in mind that the traction provided by snow tires on dry roads may not be as high as your vehicle's original equipment tires. You should drive cautiously even when the roads are clear. Check with the tire dealer for maximum speed recommendations.

⚠ WARNING - Snow tire size

Snow tires should be equivalent in size and type to the vehicle's standard tires. Otherwise, the safety and handling of your vehicle may be adversely affected.

Do not install studded tires without first checking local, state and municipal regulations for possible restrictions against their use.

PanaSOS.com



E120102AUN

Tire chains

Since the sidewalls of radial tires are thinner, they can be damaged by mounting some types of snow chains on them. Therefore, the use of snow tires is recommended instead of snow chains. Do not mount tire chains on vehicles equipped with aluminum wheels; snow chains may cause damage to the wheels. If snow chains must be used, use wire-type chains with a thickness of less than 15 mm (0.59 in). Damage to your vehicle caused by improper snow chain use is not covered by your vehicle manufacturers warranty.

Install tire chains only on the front tires.

⚠ CAUTION

- ***Make sure the snow chains are the correct size and type for your tires. Incorrect snow chains can cause damage to the vehicle body and suspension and may not be covered by your vehicle manufacturer warranty. Also, the snow chain connecting hooks may be damaged from contacting vehicle components causing the snow chains to come loose from the tire. Make sure the snow chains are SAE class "S" certified.***
- ***Always check chain installation for proper mounting after driving approximately 0.5 to 1 km (0.3 to 0.6 miles) to ensure safe mounting. Retighten or remount the chains if they are loose.***

Chain installation

When installing chains, follow the manufacturer's instructions and mount them as tightly as you can. Drive slowly with chains installed. If you hear the chains contacting the body or chassis, stop and tighten them. If they still make contact, slow down until it stops. Remove the chains as soon as you begin driving on cleared roads.

⚠ WARNING - Mounting chains

When mounting snow chains, park the vehicle on level ground away from traffic. Turn on the vehicle Hazard Warning flashers and place a triangular emergency warning device behind the vehicle if available. Always place the vehicle in P (Park), apply the parking brake and turn off the engine before installing snow chains.

FarmaSOS.com

⚠ WARNING - Tire chains

- **The use of chains may adversely affect vehicle handling.**
- **Do not exceed 30 km/h (20 mph) or the chain manufacturer's recommended speed limit, whichever is lower.**
- **Drive carefully and avoid bumps, holes, sharp turns, and other road hazards, which may cause the vehicle to bounce.**
- **Avoid sharp turns or locked-wheel braking.**

⚠ CAUTION

- ***Chains that are the wrong size or improperly installed can damage your vehicle's brake lines, suspension, body and wheels.***
- ***Stop driving and retighten the chains any time you hear them hitting the vehicle.***

E120200AUN

Use high quality ethylene glycol coolant

Your vehicle is delivered with high quality ethylene glycol coolant in the cooling system. It is the only type of coolant that should be used because it helps prevent corrosion in the cooling system, lubricates the water pump and prevents freezing. Be sure to replace or replenish your coolant in accordance with the maintenance schedule in section 7. Before winter, have your coolant tested to assure that its freezing point is sufficient for the temperatures anticipated during the winter.

تلفن شبانه روزی: ۰۲۱-۸۸۸۶۲۰۸۵

E120300AUN

Check battery and cables

Winter puts additional burdens on the battery system. Visually inspect the battery and cables as described in section 7. The level of charge in your battery can be checked by an authorized KIA dealer or a service station.

FarmaGos.com

E120400AUN

Change to "winter weight" oil if necessary

In some climates it is recommended that a lower viscosity "winter weight" oil be used during cold weather. See section 8 for recommendations. If you aren't sure what weight oil you should use, consult an authorized KIA dealer.

E120500AUN

Check spark plugs and ignition system (for gasoline engine)

Inspect your spark plugs as described in section 7 and replace them if necessary. Also check all ignition wiring and components to be sure they are not cracked, worn or damaged in any way.

E120600AUN

To keep locks from freezing

To keep the locks from freezing, squirt an approved de-icer fluid or glycerine into the key opening. If a lock is covered with ice, squirt it with an approved de-icing fluid to remove the ice. If the lock is frozen internally, you may be able to thaw it out by using a heated key. Handle the heated key with care to avoid injury.

E120700AUN

Use approved window washer anti-freeze in system

To keep the water in the window washer system from freezing, add an approved window washer anti-freeze solution in accordance with instructions on the container. Window washer anti-freeze is available from an authorized KIA dealer and most auto parts outlets. Do not use engine coolant or other types of anti-freeze as these may damage the paint finish.

E120800AUN

Don't let your parking brake freeze

Under some conditions your parking brake can freeze in the engaged position. This is most likely to happen when there is an accumulation of snow or ice around or near the rear brakes or if the brakes are wet. If there is a risk the parking brake may freeze, apply it only temporarily while you put the gear selector lever in P (automatic transaxle) or in first or reverse gear (manual transaxle) and block the rear wheels so the car cannot roll. Then release the parking brake.

تلفن شبانه روزی: ۰۲۱-۸۸۶۲۰۸۵
PajmaCOS.com

E120900AUN

Don't let ice and snow accumulate underneath

Under some conditions, snow and ice can build up under the fenders and interfere with the steering. When driving in severe winter conditions where this may happen, you should periodically check underneath the car to be sure the movement of the front wheels and the steering components is not obstructed.

E121000ASA

Carry emergency equipment

Depending on the severity of the weather, you should carry appropriate emergency equipment. Some of the items you may want to carry include tire chains, tow straps or chains, flashlight, emergency flares, sand, shovel, jumper cables, window scraper, gloves, ground cloth, coveralls, blanket, etc.

TRAILER TOWING (FOR EUROPE)

E140000ASA

If you are considering towing with with your car, you should first check with your country's Department of Motor Vehicles to determine their legal requirements.

Since laws vary the requirements for towing trailers, cars, or other types of vehicles or apparatus may differ. Ask an authorized KIA dealer for further details before towing.

⚠ WARNING - Towing a trailer

If you don't use the correct equipment and drive improperly, you can lose control when you pull a trailer. For example, if the trailer is too heavy, the brakes may not work well - or even at all. You and your passengers could be seriously or fatally injured. Pull a trailer only if you have followed all the steps in this section.

⚠ WARNING - Weight limits

Before towing, make sure the total trailer weight, gross combination weight, gross vehicle weight, gross axle weight and trailer tongue load are all within the limits.

✻ NOTICE - For Europe

- **The technically permissible maximum load on the rear axle(s) may be exceeded by not more than 15 % and the technically permissible maximum laden mass of the vehicle may be exceeded by not more than 10 % or 100 kg (220.4 lbs), whichever value is lower. In this case, do not exceed 100 km/h (62.1 mph) for vehicle of category M1 or 80 km/h (49.7 mph) for vehicle of category N1.**
- **When a vehicle of category M1 is towing a trailer, the additional load imposed at the trailer coupling device may cause the tire maximum load ratings to be exceeded, but not by more than 15 %. In this case, do not exceed 100 km/h (62.1 mph) and increase the tire inflation pressure by at least 0.2 bar.**

⚠ CAUTION

Pulling a trailer improperly can damage your vehicle and result in costly repairs not covered by your warranty. To pull a trailer correctly, follow the advice in this section.

Your vehicle can tow a trailer. To identify what the vehicle trailering capacity is for your vehicle, you should read the information in “Weight of the trailer” that appears later in this section.

Remember that trailering is different than just driving your vehicle by itself. Trailering means changes in handling, durability, and fuel economy. Successful, safe trailering requires correct equipment, and it has to be used properly.

This section contains many time-tested, important trailering tips and safety rules. Many of these are important for your safety and that of your passengers. Please read this section carefully before you pull a trailer.

Load-pulling components such as the engine, transaxle, wheel assemblies, and tires are forced to work harder against the load of the added weight. The engine is required to operate at relatively higher speeds and under greater loads. This additional burden generates extra heat. The trailer also considerably adds wind resistance, increasing pulling requirements.

FarmaSOS.com

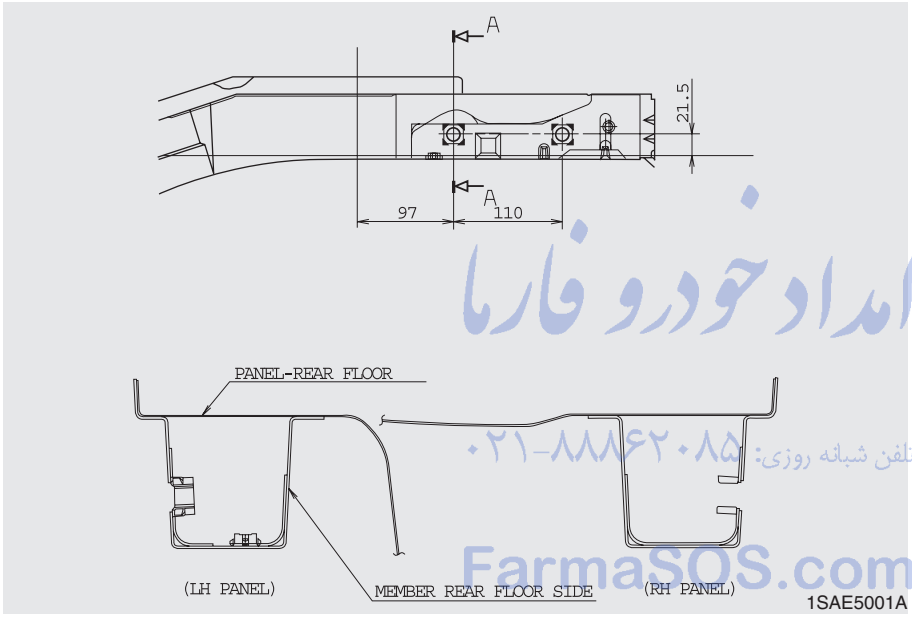

امداد خودرو فارما
تلفن شبانه روزی: ۰۲۱-۸۸۸۶۲۰۸۵
FarmaSOS.com

E140100ASA

Hitches

It's important to have the correct hitch equipment. Crosswinds, large trucks going by, and rough roads are a few reasons why you'll need the right hitch. Here are some rules to follow:

- Do you have to make any holes in the body of your vehicle when you install a trailer hitch? If you do, then be sure to seal the holes later when you remove the hitch.

  If you don't seal them, deadly carbon monoxide (CO) from your exhaust can get into your vehicle, as well as dirt and water.
- The bumpers on your vehicle are not intended for hitches. Do not attach rental hitches or other bumper-type hitches. Use only a frame-mounted hitch that does not attach to the bumper.
- KIA trailer hitch accessory is available at an authorized KIA dealer.

E140200ASA

Safety chains

You should always attach chains between your vehicle and your trailer. Cross the safety chains under the tongue of the trailer so that the tongue will not drop to the road if it becomes separated from the hitch.

Instructions about safety chains may be provided by the hitch manufacturer or by the trailer manufacturer. Follow the manufacturer's recommendation for attaching safety chains. Always leave just enough slack so you can turn with your trailer. And, never allow safety chains drag on the ground.

E140300AUN

Trailer brakes

If your trailer is equipped with a braking system, make sure it conforms to your country's regulations and that it is properly installed and operating correctly.

If your trailer weighs more than the maximum trailer weight without trailer brakes loaded, then it needs its own brakes and they must be adequate. Be sure to read and follow the instructions for the trailer brakes so you'll be able to install, adjust and maintain them properly.

- Don't tap into your vehicle's brake system.

⚠ WARNING - Trailer brakes

Do not use a trailer with its own brakes unless you are absolutely certain that you have properly set up the brake system. This is not a task for amateurs. Use an experienced, competent trailer shop for this work.

E140400ASA

Driving with a trailer

Towing a trailer requires a certain amount of experience. Before setting out for the open road, you must get to know your trailer. Acquaint yourself with the feel of handling and braking with the added weight of the trailer. And always keep in mind that the vehicle you are driving is now a good deal longer and not nearly so responsive as your vehicle is by itself.

Before you start, check the trailer hitch and platform, safety chains, electrical connector(s), lights, tires and mirror adjustment. If the trailer has electric brakes, start your vehicle and trailer moving and then apply the trailer brake controller by hand to be sure the brakes are working. This lets you check your electrical connection at the same time.

During your trip, check occasionally to be sure that the load is secure, and that the lights and trailer brakes are still working.

E140401AUN

Following distance

Stay at least twice as far behind the vehicle ahead as you would when driving your vehicle without a trailer. This can help you avoid situations that require heavy braking and sudden turns.

E140402AUN

Passing

You'll need more passing distance up ahead when you're towing a trailer. And, because of the increased vehicle length, you'll need to go much farther beyond the passed vehicle before you can return to your lane.

E140403AUN

Backing up

Hold the bottom of the steering wheel with one hand. Then, to move the trailer to the left, just move your hand to the left. To move the trailer to the right, move your hand to the right. Always back up slowly and, if possible, have someone guide you.

E140404AUN

Making turns

When you're turning with a trailer, make wider turns than normal. Do this so your trailer won't strike soft shoulders, curbs, road signs, trees, or other objects. Avoid jerky or sudden maneuvers. Signal well in advance.

E140405AUN

Turn signals when towing a trailer

When you tow a trailer, your vehicle has to have a different turn signal flasher and extra wiring. The green arrows on your instrument panel will flash whenever you signal a turn or lane change. Properly connected, the trailer lights will also flash to alert other drivers you're about to turn, change lanes, or stop.

When towing a trailer, the green arrows on your instrument panel will flash for turns even if the bulbs on the trailer are burned out. Thus, you may think drivers behind you are seeing your signals when, in fact, they are not. It's important to check occasionally to be sure the trailer bulbs are still working. You must also check the lights every time you disconnect and then reconnect the wires.

Do not connect a trailer lighting system directly to your vehicle's lighting system. Use only an approved trailer wiring harness. An authorized KIA dealer can assist you in installing the wiring harness.

⚠ WARNING

Failure to use an approved trailer wiring harness could result in damage to the vehicle electrical system and/or personal injury.

E140406ASA

Driving on grades

Reduce the speed and shift to a lower gear before you start down a long or steep downgrade. If you don't shift down, you might have to use your brakes so much that they would get hot and no longer operate efficiently.

On a long uphill grade, shift down and reduce your speed to around 45 mph (70 km/h) to reduce the possibility of engine and transaxle overheating.

If your trailer weighs more than the maximum trailer weight without trailer brakes and you have an automatic transaxle, you should drive in D (Drive) when towing a trailer.

Operating your vehicle in D (Drive) when towing a trailer will minimize heat build up and extend the life of your transaxle.

⚠ CAUTION

- ***When towing a trailer on steep grades (in excess of 6%) pay close attention to the engine coolant temperature gauge to ensure the engine does not overheat. If the needle of the coolant temperature gauge moves across the dial towards "H (or 130°C / 260°F)" (HOT), pull over and stop as soon as it is safe to do so, and allow the engine to idle until it cools down. You may proceed once the engine has cooled sufficiently.***
- ***You must decide the driving speed depending on trailer weight and uphill grade to reduce the possibility of engine and transaxle overheating.***

E140407ATD

Parking on hills

Generally, if you have a trailer attached to your vehicle, you should not park your vehicle on a hill. People can be seriously or fatally injured, and both your vehicle and the trailer can be damaged if unexpectedly roll down hill.

⚠ WARNING - Parking on a hill

Parking your vehicle on a hill with a trailer attached could cause serious injury or death, should the trailer break loose.

However, if you ever have to park your trailer on a hill, here's how to do it:

1. Pull the vehicle into the parking space. Turn the steering wheel in the direction of the curb (right if headed down hill, left if headed up hill).
2. If the vehicle has a manual transaxle, place the car in neutral. If the vehicle has an automatic transaxle, place the car in P (Park).
3. Set the parking brake and shut off the vehicle.
4. Place chocks under the trailer wheels on the down hill side of the wheels.
5. Start the vehicle, hold the brakes, shift to neutral, release the parking brake and slowly release the brakes until the trailer chocks absorb the load.
6. Reapply the brakes, reapply the parking brake and shift the vehicle to R (Reverse) for manual transaxle or P (Park) for automatic transaxle.
7. Shut off the vehicle and release the vehicle brakes but leave the parking brake set.

⚠ WARNING - Parking brake

It can be dangerous to get out of your vehicle if the parking brake is not firmly set.

If you have left the engine running, the vehicle can move suddenly. You or others could be seriously or fatally injured.

FarnaaDoc.com

When you are ready to leave after parking on a hill

1. With the manual transaxle in Neutral or automatic transaxle in P (Park), apply your brakes and hold the brake pedal down while you:
   - Start your engine;
   - Shift into gear; and
   - Release the parking brake.
2. Slowly remove your foot from the brake pedal.
3. Drive slowly until the trailer is clear of the chocks.
4. Stop and have someone pick up and store the chocks.

E140500ASA

Maintenance when trailer towing

Your vehicle will need service more often when you regularly pull a trailer. Important items to pay particular attention to include engine oil, automatic transaxle fluid, axle lubricant and cooling system fluid. Brake condition is another important item to frequently check. Each item is covered in this manual, and the Index will help you find them quickly. If you're trailering, it's a good idea to review these sections before you start your trip.

Don't forget to also maintain your trailer and hitch. Follow the maintenance schedule that accompanied your trailer and check it periodically. Preferably, conduct the check at the start of each day's driving. Most importantly, all hitch nuts and bolts should be tight.

FarmaSOS.com

⚠ CAUTION

- ***Due to higher load during trailer usage, overheating might occur in hot days or during uphill driving. If the coolant gauge indicates over-heating, switch off the A/C and stop the vehicle in a safe area to cool down the engine.***
- ***When towing, check the transaxle fluid more frequently.***
- ***If your vehicle is not equipped with an air conditioner, you should install a condenser fan to improve engine performance when towing a trailer.***

E140600ASA

If you do decide to pull a trailer

Here are some important points if you decide to pull a trailer:

- Consider using a sway control. You can ask a hitch dealer about sway control.
- Do not do any towing with your car during its first 2,000 km (1,200 miles) in order to allow the engine to properly break in. Failure to heed this caution may result in serious engine or transaxle damage.
- When towing a trailer, be sure to consult an authorized KIA dealer for further information on additional requirements such as a towing kit, etc.
- Always drive your vehicle at a moderate speed (less than 100 km/h / 60 mph).
- On a long uphill grade, do not exceed 70 km/h (45 mph) or the posted towing speed limit, whichever is lower.
- The chart contains important considerations that have to do with weight:

Item \ Engine		Gasoline Engine		Diesel Engine
		Manual transaxle	Automatic transaxle	
Maximum trailer weight kg (lbs.)	Without brake System	400 (882)	0 (0)	400 (882)
	With brake System	700 (1543)	400 (882)	700 (1543)
Maximum permissible static vertical load on the coupling device kg (lbs.)		28 (62)	25 (55)	28 (62)
Recommended distance from rear wheel center to coupling point mm (Inch)		565 (22.2)	565 (22.2)	565 (22.2)

امداد خودرو فارما
تلفن شبانه روزی: ۰۲۱-۸۸۸۶۲۰۸۵
FarmaSOS.com

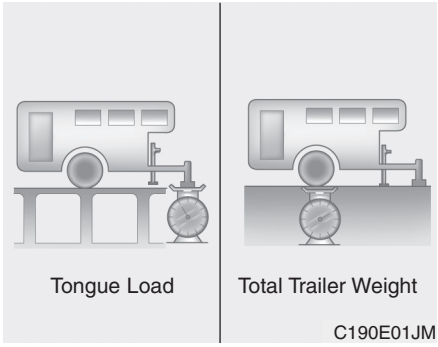

E140601ASA

Weight of the trailer

What is the maximum safe weight of a trailer? It should never weigh more than the maximum trailer weight with trailer brakes. But even that can be too heavy.

It depends on how you plan to use your trailer. For example, speed, altitude, road grades, outside temperature and how often your vehicle is used to pull a trailer are all important. The ideal trailer weight can also depend on any special equipment that you have on your vehicle.

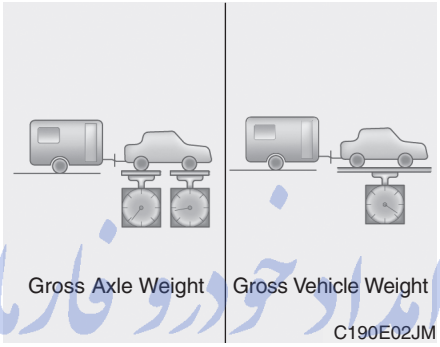

E140602ASA

Weight of the trailer tongue

The tongue load of any trailer is an important weight to measure because it affects the total gross vehicle weight (GVW) of your vehicle. This weight includes the curb weight of the vehicle, any cargo you may carry in it, and the people who will be riding in the vehicle. And if you tow a trailer, you must add the tongue load to the GVW because your vehicle will also be carrying that weight.

The trailer tongue should weigh a maximum of 10% of the total loaded trailer weight, within the limits of the maximum trailer tongue load permissible. After you've loaded your trailer, weigh the trailer and then the tongue, separately, to see if the weights are proper. If they aren't, you may be able to correct them simply by moving some items around in the trailer.

⚠ WARNING - Trailer

- **Never load a trailer with more weight in the rear than in the front. The front should be loaded with approximately 60% of the total trailer load; the rear should be loaded with approximately 40% of the total trailer load.**
- **Never exceed the maximum weight limits of the trailer or trailer towing equipment. Improper loading can result in damage to your vehicle and/or personal injury. Check weights and loading at a commercial scale or highway patrol office equipped with scales.**
- **An improperly loaded trailer can cause loss of vehicle control.**

امداد خودرو فارما
FarmaSOS.com

VEHICLE WEIGHT

E160000AUN

This section will guide you the proper loading of your vehicle and/or trailer, to keep your loaded vehicle weight within its design rating capability, with or without a trailer. Properly loading your vehicle will provide maximum return of the vehicle design performance. Before loading your vehicle, familiarize yourself with the following terms for determining your vehicle's weight ratings, with or without a trailer, from the vehicle's specifications and the certification label:

E160100AUN

Base curb weight

This is the weight of the vehicle including a full tank of fuel and all standard equipment. It does not include passengers, cargo, or optional equipment.

E160200AUN

Vehicle curb weight

This is the weight of your new vehicle when you picked it up from your dealer plus any aftermarket equipment.

E160300AUN

Cargo weight

This figure includes all weight added to the Base Curb Weight, including cargo and optional equipment.

E160400AUN

GAW (Gross axle weight)

This is the total weight placed on each axle (front and rear) - including vehicle curb weight and all payload.

E160500AUN

GAWR (Gross axle weight rating)

This is the maximum allowable weight that can be carried by a single axle (front or rear). These numbers are shown on the certification label.

The total load on each axle must never exceed its GAWR.

E160600AUN

GVW (Gross vehicle weight)

This is the Base Curb Weight plus actual Cargo Weight plus passengers.

E160700AUN

GVWR (Gross vehicle weight rating)

This is the maximum allowable weight of the fully loaded vehicle (including all options, equipment, passengers and cargo). The GVWR is shown on the certification label located on the driver's (or front passenger's) door sill.

E160800AUN

Overloading

⚠ WARNING - Vehicle weight

The gross axle weight rating (GAWR) and the gross vehicle weight rating (GVWR) for your vehicle are on the certification label attached to the driver's (or front passenger's) door. Exceeding these ratings can cause an accident or vehicle damage. You can calculate the weight of your load by weighing the items (and people) before putting them in the vehicle. Be careful not to overload your vehicle.

FarmaSOS.com

Road warning / 6-2
In case of an emergency while driving / 6-2
If the engine will not start / 6-3
Emergency starting / 6-4
If the engine overheats / 6-6
If you have a flat tire (with spare tire) / 6-7
If you have a flat tire (with TireMobilityKit) / 6-15
Towing / 6-24
Emergency commodity / 6-28

امداد خودرو فارما
۰۲۱-۸۸۸۶۰۰۰۰
FarmaSOS.com

What to do in an emergency 6

ROAD WARNING

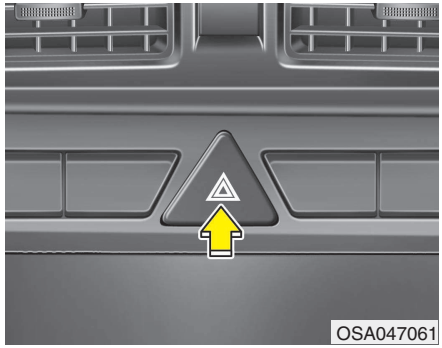

F010100ASA

Hazard warning flasher

The hazard warning flasher serves as a warning to other drivers to exercise extreme caution when approaching, overtaking, or passing your vehicle.

It should be used whenever emergency repairs are being made or when the vehicle is stopped near the edge of a roadway.

Depress the flasher switch with the ignition switch in any position. The flasher switch is located in the center console switch panel. All turn signal lights will flash simultaneously.

- The hazard warning flasher operates whether your vehicle is running or not.
- The turn signals do not work when the hazard flasher is on.
- The hazard warning flasher should always be on while the vehicle is being towed.

تلفن شبانه روزی: ۰۹۱۲۸۸۶۲۰۸۵
FarmaSOS.com

IN CASE OF AN EMERGENCY WHILE DRIVING

F020100AUN

If the engine stalls at a crossroad or crossing

- If the engine stalls at a crossroad or crossing, set the shift lever in the N (Neutral) position and then push the vehicle to a safe place.
- If your vehicle has a manual transaxle not equipped with a ignition lock switch, the vehicle can move forward by shifting to the 2 (second) or 3 (third) gear and then turning the starter without depressing the clutch pedal.

F020100ASA

If you have a flat tire while driving

If a tire goes flat while you are driving:

1. Take your foot off the accelerator pedal and let the car slow down while driving straight ahead. Do not apply the brakes immediately or attempt to pull off the road as this may cause a loss of control. When the car has slowed to such a speed that it is safe to do so, brake carefully and pull off the road. Drive off the road as far as possible and park on a firm level ground. If you are on a divided highway, do not park in the median area between the two traffic lanes.

2. When the car is stopped, turn on your emergency hazard flashers, set the parking brake and put the transaxle in P (automatic transaxle) or Reverse (manual transaxle).
3. Have all passengers get out of the car. Be sure they all get out on the side of the car that is away from traffic.
4. When changing a flat tire, follow the instruction provided later in this section.

F020300AUN

If engine stalls while driving

1. Reduce your speed gradually, keeping a straight line. Move cautiously off the road to a safe place.
2. Turn on your emergency flashers.
3. Try to start the engine again. If your vehicle will not start, contact an authorized KIA dealer or seek other qualified assistance.

IF THE ENGINE WILL NOT START

F030100AUN

If engine doesn't turn over or turns over slowly

1. If your car has an automatic transaxle, be sure the gear selector lever is in N (Neutral) or P (Park) and the emergency brake is set.
2. Check the battery connections to be sure they are clean and tight.
3. Turn on the interior light. If the light dims or goes out when you operate the starter, the battery is discharged.
4. Check the starter connections to be sure they are securely tightened.
5. Do not push or pull the vehicle to start it. See instructions for "Jump starting".

تلفن شبانه روزی: ۰۲۱-۸۸۸۲۰۸۵

⚠ WARNING

If the engine will not start, do not push or pull the car to start it. This could result in a collision or cause other damage. In addition, push or pull starting may cause the catalytic converter to be overloaded and create a fire hazard.

F030200ASA

If engine turns over normally but does not start

1. Check the fuel level.
2. With the ignition switch in the LOCK position, check all connectors at the ignition coils and spark plugs. Reconnect any that may be disconnected or loose.
3. Check the fuel line in the engine compartment.
4. If the engine still does not start, call an authorized KIA dealer or seek other qualified assistance.

EMERGENCY STARTING

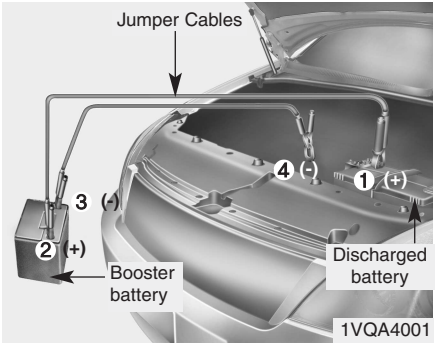

F040000AUN

Connect cables in numerical order and disconnect in reverse order.

F040100AUN

Jump starting

Jump starting can be dangerous if done incorrectly. Therefore, to avoid harm to yourself or damage to your vehicle or battery, follow the jump starting procedures. If in doubt, we strongly recommend that you have a competent technician or towing service jump start your vehicle.

⚠ CAUTION

Use only a 12-volt jumper system. You can damage a 12-volt starting motor, ignition system, and other electrical parts beyond repair by use of a 24-volt power supply (either two 12-volt batteries in series or a 24-volt motor generator set).

⚠ WARNING - Battery

Never attempt to check the electrolyte level of the battery as this may cause the battery to rupture or explode causing serious injury.

⚠ WARNING - Battery

- **Keep all flames or sparks away from the battery. The battery produces hydrogen gas which may explode if exposed to flame or sparks.**
- **Do not attempt to jump start the vehicle if the discharged battery is frozen or if the electrolyte level is low; the battery may rupture or explode.**

FarmaSOS.com

F040101ASA

Jump starting procedure

1. Make sure the booster battery is 12-volt and that its negative terminal is grounded.
2. If the booster battery is in another vehicle, do not allow the vehicles come in contact.
3. Turn off all unnecessary electrical loads.
4. Connect the jumper cables in the exact sequence shown in the illustration. First connect one end of a jumper cable to the positive terminal of the discharged battery (1), then connect the other end to the positive terminal on the booster battery (2).

   Proceed to connect one end of the other jumper cable to the negative terminal of the booster battery (3), then the other end to a solid, stationary, metallic point (for example, the engine lifting bracket) away from the battery (4). Do not connect it to or near any part that moves when the engine is cranked.

   Do not allow the jumper cables to contact anything except the correct battery terminals or the correct ground. Do not lean over the battery when making connections.

⚠ CAUTION - Battery cables

Do not connect the jumper cable from the negative terminal of the booster battery to the negative terminal of the discharged battery. This can cause the discharged battery to overheat and crack, releasing battery acid.

5. Start the engine of the vehicle with the booster battery and let it run at 2,000 rpm, then start the engine of the vehicle with the discharged battery.

If the cause of your battery discharging is not apparent, you should have your vehicle checked by an authorized KIA dealer.

F040200AUN

Push-starting

Your manual transaxle-equipped vehicle should not be push-started because it might damage the emission control system.

Vehicles equipped with automatic transaxle cannot be push-started.

Follow the directions in this section for jump-starting.

⚠ WARNING

Never tow a vehicle to start it because the sudden surge forward when the engine starts could cause a collision with the tow vehicle.

IF THE ENGINE OVERHEATS

F050000ASA

If your temperature gauge indicates overheating, you experience a loss of power, or hear loud pinging or knocking, the engine is probably too hot. If this happens, you should:

1. Pull off the road and stop as soon as it is safe to do so.
2. Place the gear selector lever in P (automatic transaxle) or Neutral (manual transaxle) and set the parking brake. If the air conditioning is on, turn it off.
3. If the engine coolant is running out under the car or steam is coming out from the hood, stop the engine. Do not open the hood until the coolant has stopped running or the steaming has stopped. If there is no visible loss of engine coolant and no steam, leave the engine running and check to be sure the engine cooling fan is operating. If the fan is not running, turn the engine off.
4. Check to see if the water pump drive belt is missing. If it is not missing, check to see that it is tight. If the drive belt seems to be satisfactory, check for coolant leaking from the radiator, hoses or under the car. (If the air conditioning had been in use, it is normal for cold water to be draining from it when you stop).

⚠ WARNING

While the engine is running, keep hair, hands and clothing away from moving parts such as the fan and drive belts to prevent injury.

5. If the water pump drive belt is broken or engine coolant is leaking out, stop the engine immediately and call the nearest authorized KIA dealer for assistance.

⚠ WARNING

Do not remove the radiator cap when the engine is hot. This can allow coolant to be blown out of the opening and cause serious burns.

6. If you cannot find the cause of overheating, wait until the engine temperature has returned to normal. Then, check to see if the coolant has been lost, carefully add coolant to the reservoir to bring the fluid level in the reservoir up to the halfway mark.
7. Proceed with caution, keeping alert for further signs of overheating. If overheating happens again, call an authorized KIA dealer for assistance.

⚠ CAUTION

Serious loss of coolant indicates there is a leak in the cooling system and this should be checked as soon as possible by an authorized KIA dealer.

FarnaSOS.com

IF YOU HAVE A FLAT TIRE (WITH SPARE TIRE, IF EQUIPPED)

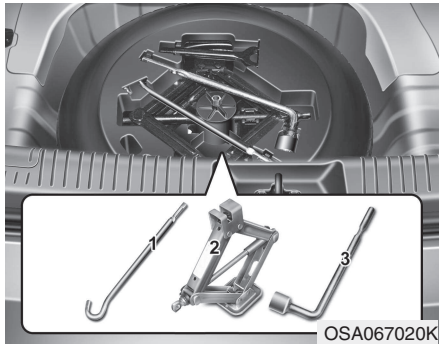

F070100ASA

Jack and tools

The jack, jack handle, wheel lug nut wrench are stored in the luggage compartment.

Pull up the luggage box cover to reach this equipment.

(1) Jack handle
(2) Jack
(3) Wheel lug nut wrench

امداد خودرو فارما
تلفن شبانه روزی: ۰۲۱-۸۸۸۶۲۰۸۵
FarmaSOS.com

F070101ASA

Jacking instructions

The jack is provided for emergency tire changing only.

To prevent the jack from “rattling” while the vehicle is in motion, store it properly.

Follow jacking instructions to reduce the possibility of personal injury.

⚠ WARNING - Changing tires

- **Never attempt vehicle repairs in the traffic lanes of a public road or highway.**
- **Always move the vehicle completely off the road and onto the shoulder before trying to change a tire. The jack should be used on a firm level ground. If you cannot find a firm level place off the road, call a towing service company for assistance.**

(Continued)

(Continued)

- **Be sure to use the correct front and rear jacking positions on the vehicle; never use the bumpers or any other part of the vehicle for jack support.**
- **The vehicle can easily roll off the jack causing serious injury or death. No person should place any portion of their body under a vehicle that is supported only by a jack; use vehicle support stands.**
- **Do not start or run the engine while the vehicle is on the jack.**
- **Do not allow anyone remain in the vehicle while it is on the jack.**
- **Make sure any children present are in a secure place away from the road and from the vehicle that is to be raised with the jack.**

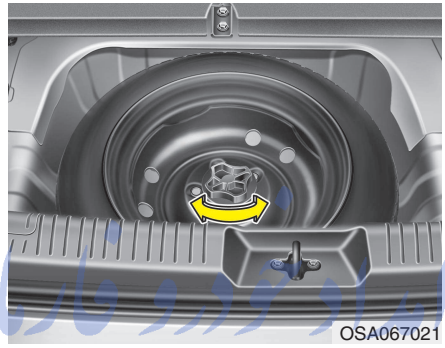

F070200ASA

Removing and storing the spare tire

Turn the tire hold-down wing bolt counterclockwise.

Store the tire in the reverse order of removal.

To prevent the spare tire and tools from “rattling” while the vehicle is in motion, store them properly.

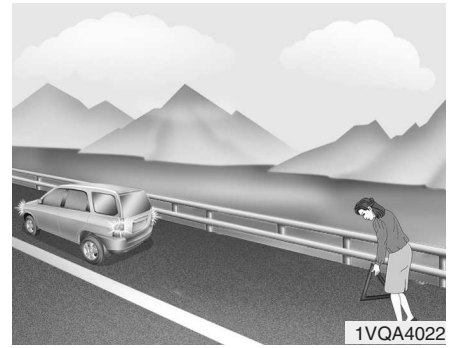

F070300ASA

Changing tires

1. Park on a level surface and apply the parking brake firmly.
2. Shift the shift lever into R (Reverse) with manual transaxle or P (Park) with automatic transaxle.
3. Activate the hazard warning flasher.

FarmaSOS.com


OSA067007

4. Remove the wheel lug nut wrench, jack, jack handle, and spare tire from the vehicle.
5. Block both the front and rear of wheel that is diagonally opposite of the jack position.

⚠ WARNING - Changing a tire

- **To prevent vehicle movement while changing a tire, always set the parking brake fully, and always block the wheel diagonally opposite of the wheel being changed.**
- **We recommend that the wheels of the vehicle be blocked, and that no person remain in a vehicle that is being jacked.**

تلفن شبانه روزی: ۰۲۱-۸۸۸۶۲۰۸۵

FarmaSOS.com



OSA067025

6. Loosen the wheel lug nuts counterclockwise one turn each, but do not remove any nut until the tire has been raised off the ground.


OSA067023

7. Place the jack at the front or rear jacking position closest to the tire you are changing. Place the jack at the designated locations under the frame. The jacking positions are plates welded to the frame with two tabs and a raised dot to index with the jack.

⚠ WARNING - Jack location
To reduce the possibility of injury, be sure to use only the jack provided with the vehicle and in the correct jack position; never use any other part of the vehicle for jack support.

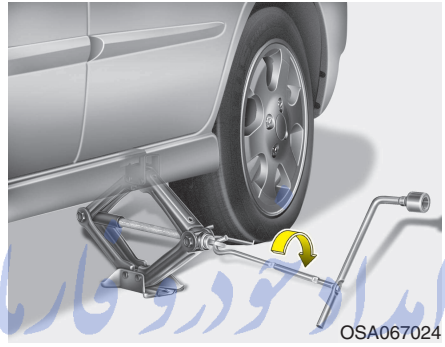
OSA067024

8. Insert the jack handle into the jack and turn it clockwise, raising the vehicle until the tire just clears the ground. This measurement is approximately 30 mm (1.2 in). Before removing the wheel lug nuts, make sure the vehicle is stable and that there is no chance for movement or slippage.

9. Loosen the wheel nuts and remove them with your fingers. Slide the wheel off the studs and lay it flat so it cannot roll away. To put the wheel on the hub, pick up the spare tire, line up the holes with the studs and slide the wheel onto them. If this is difficult, tip the wheel slightly and get the top hole in the wheel lined up with the top stud. Then jiggle the wheel back and forth until the wheel can be slid over the other studs.

Farma3CS.com

⚠ WARNING

Wheels and wheel covers may have sharp edges. Handle them carefully to avoid possible severe injury. Before putting the wheel into place, be sure that there is nothing on the hub or wheel (such as mud, tar, gravel, etc.) that interferes with the wheel from fitting solidly against the hub.

If there is, remove it. If the contact of the mounting surface between the wheel and hub is not good, the wheel nuts could come loose and cause the loss of a wheel. Loss of a wheel may result in loss of control of the vehicle. This may cause serious injury or death.

10. To reinstall the wheel, hold it on the studs, put the wheel nuts on the studs and tighten them finger tight. The nuts should be installed with their tapered small diameter ends directed inward. Jiggle the tire to be sure it is completely seated, then tighten the nuts as much as possible with your fingers again.
11. Lower the car to the ground by turning the wheel nut wrench counterclockwise.

امداد خودرو ما
تلفن شبانه روزی: ۰۲۱-۸۸۸۶۲۰۸۵
FarmaSOS.com



OSA067022

Then position the wrench as shown in the drawing and tighten the wheel nuts. Be sure the socket is seated completely over the nut. Do not stand on the wrench handle or use an extension pipe over the wrench handle. Go around the wheel tightening every other nut until they are all tight. Then double-check each nut for tightness. After changing wheels, have an authorized KIA dealer tighten the wheel nuts to their proper torque as soon as possible.

Wheel nut tightening torque:

Steel wheel & aluminum alloy wheel:
9~11 kg·m (65~79 lb·ft)

If you have a tire gauge, remove the valve cap and check the air pressure. If the pressure is lower than recommended, drive slowly to the nearest service station and inflate to the correct pressure. If it is too high, adjust it until it is correct. Always reinstall the valve cap after checking or adjusting tire pressure. If the cap is not replaced, air may leak from the tire. If you lose a valve cap, buy another and install it as soon as possible.

After you have changed wheels, always secure the flat tire in its place and return the jack and tools to their proper storage locations.

⚠ CAUTION

Your vehicle has metric threads on the wheel studs and nuts. Make certain during wheel removal that the same nuts that were removed are reinstalled - or, if replaced, that nuts with metric threads and the same chamfer configuration are used. Installation of a non-metric thread nut on a metric stud or vice-versa will not secure the wheel to the hub properly and will damage the stud so that it must be replaced.

Note that most lug nuts do not have metric threads. Be sure to be extremely cautious in checking for thread style before installing aftermarket lug nuts or wheels. If in doubt, consult an authorized KIA dealer.

⚠ WARNING - Wheel studs

If the studs are damaged, they may lose their ability to retain the wheel. This could lead to the loss of the wheel and a collision resulting in serious injuries.

To prevent the jack, jack handle, wheel lug nut wrench and spare tire from rattling while the vehicle is in motion, store them properly.

⚠ WARNING - Inadequate spare tire pressure

Check the inflation pressures as soon as possible after installing the spare tire. Adjust it to the specified pressure, if necessary. Refer to "Tires and wheels" in section 8.

F070301ASA

Important - use of compact spare tire (if equipped)

Your vehicle is equipped with a compact spare tire. This compact spare tire takes up less space than a regular-size tire. This tire is smaller than a conventional tire and is designed for temporary use only.

⚠ CAUTION

- ***You should drive carefully when the compact spare is in use. The compact spare should be replaced by the proper conventional tire and rim at the first opportunity.***
- ***The operation of this vehicle is not recommended with more than one compact spare tire in use at the same time.***

⚠ WARNING

The compact spare tire is for emergency use only. Do not operate your vehicle on this compact spare at the speed over 80 km/h (50 mph). The original tire should be repaired or replaced as soon as possible to avoid failure of the spare possibly leading to personal injury or death.

The compact spare should be inflated to 420 kPa (60 psi).

✻ NOTICE

Check the inflation pressure after installing the spare tire. Adjust it to the specified pressure, as necessary.

When using a compact spare tire, observe the following precautions:

- Under no circumstances should you exceed 80 km/h (50 mph); a higher speed could damage the tire.
- Ensure that you drive slowly enough to avoid all hazards. Any road hazard, such as a pothole or debris, could seriously damage the compact spare.
- Any continuous road use of this tire could result in tire failure, loss of vehicle control, and possible personal injury.
- Do not exceed the vehicle's maximum load rating or the load-carrying capacity shown on the sidewall of the compact spare tire.
- Avoid driving over obstacles. The compact spare tire diameter is smaller than the diameter of a conventional tire and reduces the ground clearance approximately 25 mm (1 inch), which could result in damage to the vehicle.

تلفن شبانه روزی: ۰۲۱-۸۸۸۶۱۰۸۵
FarmaSOS.com

- Do not take this vehicle through an automatic car wash while the compact spare tire is installed.
- Do not use tire chains on the compact spare tire. Because of the smaller size, a tire chain will not fit properly. This could damage the vehicle and result in loss of the chain.
- The compact spare tire should not be installed on the front axle if the vehicle must be driven in snow or on ice.
- Do not use the compact spare tire on any other vehicle because this tire has been designed especially for your vehicle.
- The compact spare tire's tread life is shorter than a regular tire. Inspect your compact spare tire regularly and replace worn compact spare tires with the same size and design, mounted on the same wheel.
- The compact spare tire should not be used on any other wheels, nor should standard tires, snow tires, wheel covers or trim rings be used with the compact spare wheel. If such use is attempted, damage to these items or other car components may occur.
- Do not use more than one compact spare tire at a time.
- Do not tow a trailer while the compact spare tire is installed.

امداد خودرو ماشا
تلفن شبانه روزی: ۰۲۱-۸۸۸۶۲۰۸۵
FarmaSOS.com

IF YOU HAVE A FLAT TIRE (WITH TIREMOBILITYKIT, IF EQUIPPED)

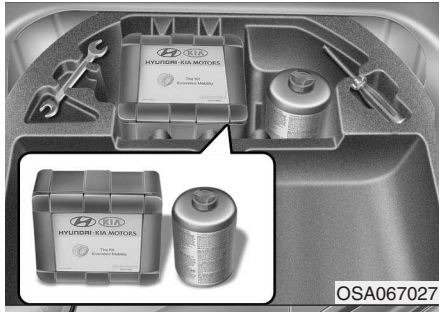



F120000AUN

Please read the instructions before using the TireMobilityKit.

(1) TireMobilityKit

(2) Sealant bottle

F120100AUN

Introduction

With the TireMobilityKit you will stay mobile even after experiencing a tire puncture. The system of the compressor and sealing compound effectively and comfortably seals most punctures in a passenger car tire caused by nails or similar objects and reinflates the tire. After you are ensured that the tire is properly sealed you can drive cautiously on the tire (up to 200 km / 120 miles) at a max. speed of 80 km/h / 50 mph in order to reach a vehicle or tire dealer to have the tire replaced.

It is possible that some tires, especially with larger punctures or damage to the sidewall, cannot be sealed completely. Air pressure loss in the tire may adversely effect tire performance. For this reason, you should avoid abrupt steering or other driving maneuvers, especially if the vehicle is heavily loaded or if a trailer is in use. The TireMobilityKit is not designed or intended as a permanent tire repair method and is to be used for only one tire.

This instruction shows you step by step how to temporarily seal the puncture simply and reliably. Read the section "Notes on the safe use of the TireMobilityKit".

⚠ WARNING

Do not use the TireMobilityKit if a tire is severely damaged by driving on a flat tire or with insufficient air pressure. Only punctured areas located within the tread region of the tire can be sealed using the TireMobilityKit. Damage to the sidewall must not be repaired due to safety reasons.

PartsBOS.com

F120200AUN

What to do when a tire is punctured

A punctured tire is repaired in two stages. In the 1st stage, sealing compound and air is inflated into the tire and the vehicle driven a short distance (3 km / 2 miles) to spread the compound inside the tire. In the 2nd stage, the inflation pressure is checked and, if necessary, more air is added into the tire. It is then possible to drive cautiously with the tire up to 200 km (120 miles) at a maximum speed of 80 km/h (50 mph) in order to reach a vehicle or tire dealer to have the tire replaced. If so inform other drivers that the TireMobilityKit has been used and provide advice and warnings about changed driving behaviour.

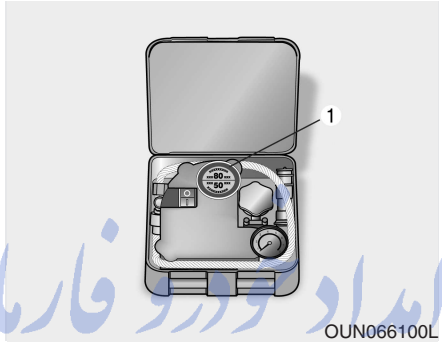

F120201ASA

1st Stage: Pump sealing compound and air into the tire

1. Open the lid and remove the speed label (1) from the TireMobilityKit and place it in the car, within clear view of the driver.

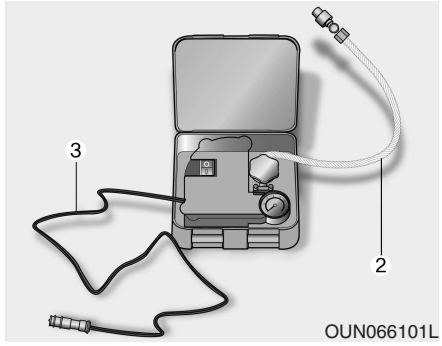

2. Remove the hose (2) and the power cable (3) from the TireMobilityKit.

FarmaSOS.com

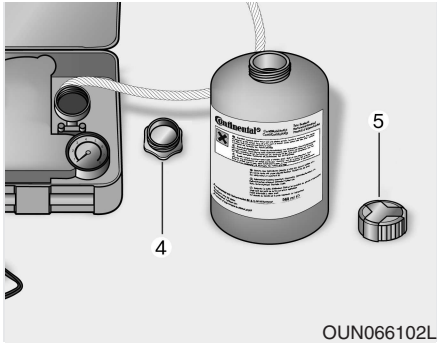

3. Unscrew the bottle holder cap (4) and the lid of the sealant bottle (5).

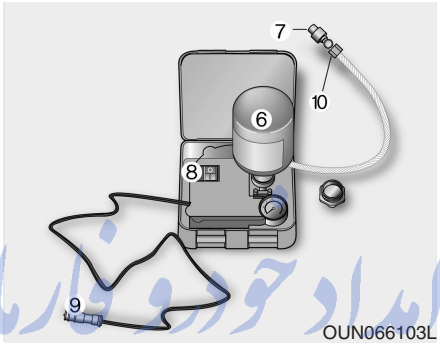

4. Screw the bottle clockwise into the bottle socket (6) until it is tight.

تلفن شبانه روزی: ۰۲۱۸۸۸۴۲۰۸۵

⚠ CAUTION

Screwing the sealant bottle into the socket will break the bottle seal. Do not unscrew the filled bottle from the socket - sealant could come out.

FarmaSOS.com

5. Unscrew the valve cap from the defective tire.
6. Screw the hose (7) of the TireMobilityKit firmly onto the tire valve.
7. Ensure that the On/Off switch (8) is in the "O"-position.
8. Place the electric plug (9) into the cigarette lighter socket (12 Volt). Do not use any other electric socket in the car.
9. Start the engine of the vehicle. (Only if the vehicle is outdoors!)

⚠ WARNING

Carbonmonoxide poisoning and suffocation is possible if the engine is left running in a poorly ventilated or unventilated location (such as inside a building).

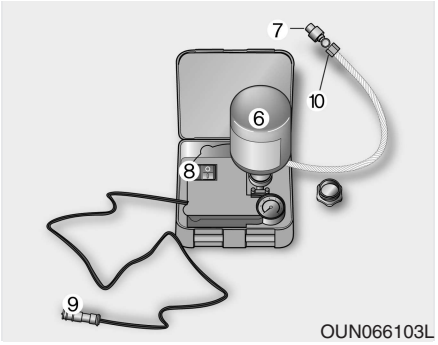

10. Switch the On/Off switch (8) to the "I"-position.

    Please note: When the sealing compound is added through the tire valve the pressure gauge could increase from approximately 4-6 bar (60-90 psi), but it will drop again after about 30 seconds.

⚠ CAUTION

During the tire inflation operation do not stand next to the damaged tire. Check the sidewall of the tire for unusual bulges or deformations. Discontinue the inflation operation and deflate the tire by using the pressure release (10), if any unusual appearance is noticed.

11. Inflate the tire to at least 1.8 bar (26 psi) and at most 3.5 bar (51 psi) within 7 minutes. Switch off the compressor briefly by pressing "O" so you are be able to read the actual tire inflation pressure on the gauge.

⚠ CAUTION

If a tire inflation pressure of 1.8 bar (26 psi) is not achievable within 7 minutes, the tire is too severely damaged and you must not drive on the tire. Call for road side service or towing.

امداد خودرو فارما
تلفن شبانه روزی: ۰۲۱-۸۸۸۶۲۰۸۵
FarmaSOS.com

12. If a tire inflation pressure of 1.8 bar (26 psi) is reached, turn the On/Off switch to the "O"-position, quickly unscrew the hose from the tire. Unplug the cable from the cigarette lighter. Do not unscrew the bottle. Stow the TireMobilityKit, the bottle cap and the bottle holder cap safely in the vehicle in an easily accessible place, as it will be needed again to check tire pressure.
13. Drive immediately and cautiously for about 3 km (2 miles) so that the sealing compound can seal the puncture. Do not exceed 80 km/h (50 mph). While driving, if you experience any unusual vibration, ride disturbance or noise, reduce your speed and drive with caution until you can safely pull off to the side of the road. Call for road side service or towing.

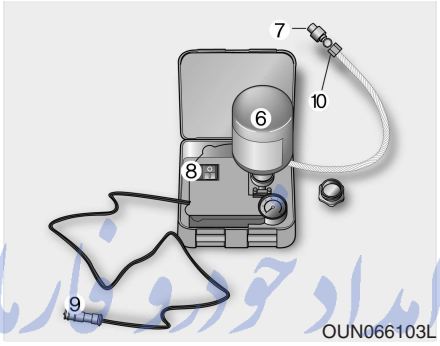

F120202ASA

2nd Stage: Check tire pressure

14. Stop after driving for about 3 km (2 miles) and check the pressure of the punctured tire as follows:
    a) Ensure that the On/Off switch (8) of the compressor is in the "O"-position.
    b) Screw the hose onto the valve of the punctured tire.
    c) Plug the power cable into the cigarette lighter (12 volt socket).
    d) Read the inflation pressure on the gauge of the TireMobilityKit.

⚠ CAUTION

If the inflation pressure is below 1.3 bar (19 psi), do not continue to drive. Call for road side service or towing.

FarmaSOS.com

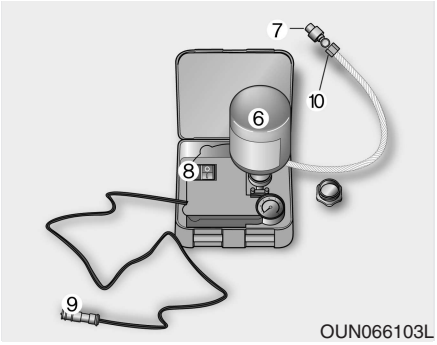

15. If the inflation pressure is 1.3 bar (19 psi) or more, turn the On/Off switch to the "I"-position and adjust the inflation pressure to the recommended inflation pressure (Refer to “Tires and wheels” in section 8). Reduce any excessive pressure by using the pressure release valve (10).
16. Turn the kit off by pressing "O". Unscrew the hose from the tire valve and unplug the electric plug from the socket.
17. Do not unscrew the bottle. Stow the TireMobilityKit safely in the vehicle.

⚠ WARNING

After the sealing compound has been used, the max. permissible speed is 80 km/h (50 mph) and the damaged tire is to be replaced promptly, at least within a distance of 200 km (120 miles). While driving, if you experience any unusual vibration, ride disturbance or noise, reduce your speed and drive with caution until you can safely pull off to the side of the road. Call for road side service or towing.

18. Drive to the next vehicle or tire dealer to replace the tire.

⚠ WARNING

After a long period without driving, the inflation pressure must be checked before driving.

19. After using the TireMobilityKit to seal your tire, replace the hose, the sealing compound and connected parts. See the last page of this instruction. When replacing the damaged tire inform the tire mechanic that a sealing compound was used before the tire is demounted!

FarmaSOS.com

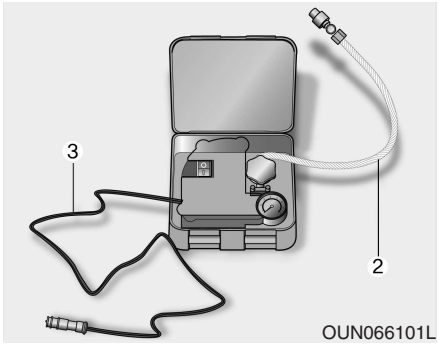

F120203APA

3rd stage: What to do when checking the tire inflation pressure

1. Open the lid from the TireMobilityKit.
2. Remove the hose (2) and the electric lead (3).
3. Unscrew the valve cap from the defective tire.

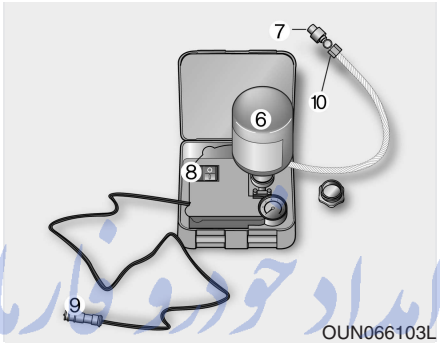

4. Screw the hose (7) tightly onto the tire valve.
5. Now you can read the tire pressure. If it needs to be increased, move on to step 6.
6. Make sure that the On/Off switch (8) is in the "O"-position.
7. Place the electric plug (9) into the socket of the cigarette lighter (12 volt).
8. Start the engine (only if the car is outdoors.)
9. Switch the On/Off switch (8) to the "I"-position and inflate the tire to the recommended inflation pressure.
10. Switch off the TireMobilityKit and check the tire pressure again.
11. After you have inflated the tire, unscrew the hose, unplug the electric plug and stow the TireMobilityKit safely in your vehicle.

FarmaSOS.com

F120300ASA

Notes on the safe use of the TireMobilityKit

- Park your car at the side of the road so that you can work with the TireMobilityKit away from moving traffic. Place your warning triangle in a prominent place to make passing vehicles aware of your location.
- To be sure your vehicle won't move, even when you're on a fairly level ground, always set your parking brake.
- Only use the TireMobilityKit for sealing/inflation passenger car tires. Do not use on motorcycles, bicycles or any other type of tires.
- Do not remove any foreign objects - such as nails or screws - that have penetrated the tire.
- Before using the TireMobilityKit read the precautionary advice printed on the sealant bottle!
- Provided the car is outdoors, leave the engine running. Otherwise operating the compressor may eventually drain the car battery.
- Never leave the TireMobilityKit unattended while it is being used.
- Do not leave the compressor running for more than 10 min. at a time or it may overheat.
- Do not use the TireMobilityKit if the ambient temperature is below -30°C (-22°F).
- Do not use the sealing compound after its expiration date which can be found on the label of the bottle.
- Keep away from children.

⚠ CAUTION

Do not use the TireMobilityKit if the tire is severely damaged by driving with insufficient air pressure (e.g. if the tire has bulges, cuts, cracks or similar defects). Only seal punctured areas located within the tread region of the tire. Damage to the sidewall should not be sealed for safety reasons.

FarmaSOS.com

F120400ASA

Technical Data

System voltage:
DC 12 V

Working voltage:
DC 10 - 15 V

Amperage rating:
max. 10 A

Suitable for use at temperatures:
-30 ~ +70°C (-22 ~ +158°F)

Max. working pressure:
6 bar (87 psi)

Size:
Compressor:170 x 150 x 65 mm
(6.7 x 5.9 x 2.6 in.)
Sealant bottle:142 x 88 ø mm
(5.6 x 3.5 ø in.)

Compressor weight:
0.95 kg (2.1 lbs)

Sealant volume:
560 ml (34.2 cu. in.)

امداد خودرو فارما
تلفن شبانه روزی: ۰۲۱-۸۸۸۶۲۰۸۵
FarmaSOS.com

Sealing compound and spare parts can be obtained and replaced at an authorized vehicle or tire dealer. Empty sealing compound bottles may be disposed of at home. Liquid residue from the sealing compound should be disposed of by your vehicle or tire dealer or in accordance with local waste disposal regulations.

TOWING

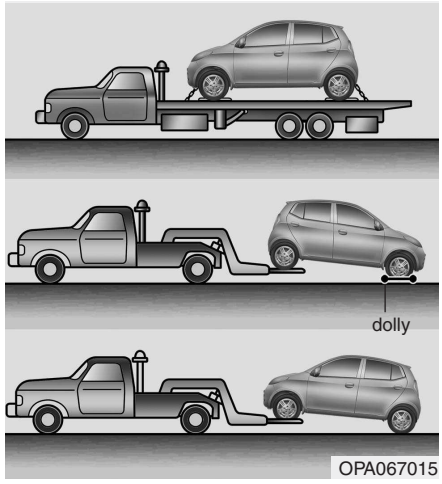

F080100AUN

Towing service

If emergency towing is necessary, we recommend having it done by an authorized KIA dealer or a commercial tow-truck service. Proper lifting and towing procedures are necessary to prevent damage to the vehicle. The use of wheel dollies or flatbed is recommended.

For trailer towing guidelines information, refer to "Trailer towing" in section 5.

It is acceptable to tow the vehicle with the rear wheels on the ground (without dollies) and the front wheels off the ground.

If any of the loaded wheels or suspension components are damaged or the vehicle is being towed with the front wheels on the ground, use a towing dolly under the front wheels.

When being towed by a commercial tow truck and wheel dollies are not used, the front of the vehicle should always be lifted, not the rear.

امداد خودرو ۰۲۱-۸۸۸۶۲۰۸۵ تلفن شبانه روزی:
FarmaSOS.com

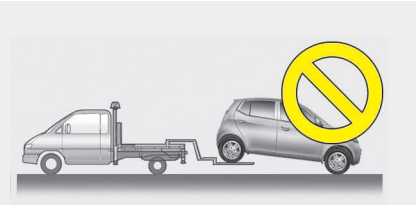



⚠ CAUTION

- ***Do not tow the vehicle backwards with the front wheels on the ground as this may cause damage to the vehicle.***
- ***Do not tow with sling-type equipment. Use a wheel lift or flatbed equipment.***

When towing your vehicle in an emergency without wheel dollies :

1. Set the ignition switch in the ACC position.
2. Place the transaxle shift lever in N (Neutral).
3. Release the parking brake.

⚠ CAUTION

Failure to place the transaxle shift lever in N (Neutral) may cause internal damage to the transaxle.

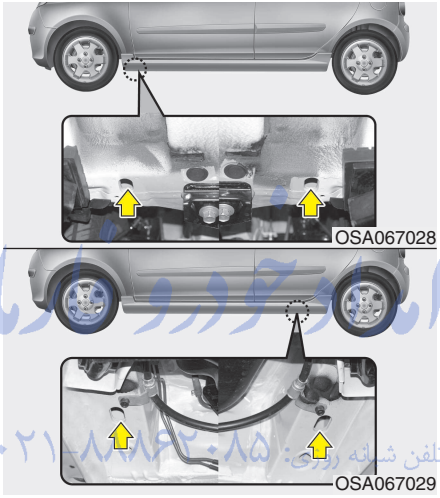

F080400AUN

Tie-down hook (for flatbed towing) (if equipped)

⚠ CAUTION

Do not use the hooks under the front and rear of the vehicle for towing purposes. These hooks are designed ONLY for transport tie-down. If the tie-down hooks are used for towing, the tie-down hooks will be damaged and this could lead to serious injury.

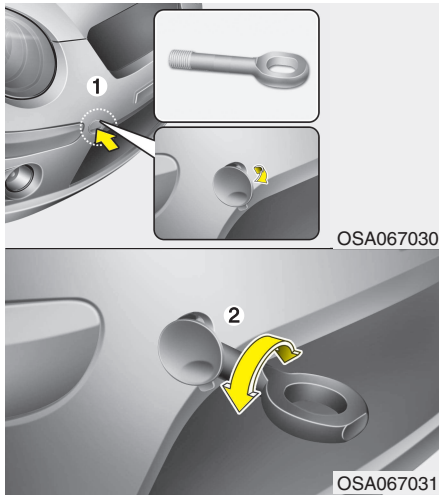

F080200APA

Removable towing hook (front) (if equipped)

1. Open the tailgate, and remove the towing hook from the tool case.
2. Remove the hole cover pressing the lower part of the cover on the front bumper (1).
3. Install the towing hook by turning it clockwise into the hole until it is fully secured (2).
4. Remove the towing hook and install the cover after use.

ایران خودرو دیزل
تلفن شبانه روزی: ۰۲۱-۸۸۸۳۰۸۵
RamaSos.com

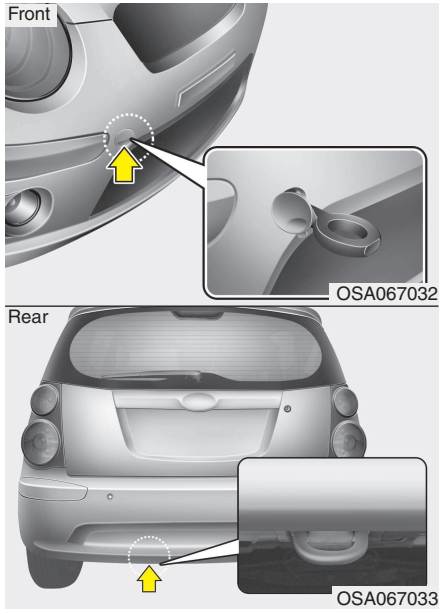

F080300ASA

Emergency towing

If towing is necessary, we recommend you to have it done by an authorized KIA dealer or a commercial tow truck service.

If towing service is not available in an emergency, your vehicle may be temporarily towed using a cable or chain secured to the emergency towing hook under the front (or rear) of the vehicle. Use extreme caution when towing the vehicle. A driver must be in the vehicle to steer it and operate the brakes.

Towing in this manner may be done only on hard-surfaced roads for a short distance and at low speed. Also, the wheels, axles, power train, steering and brakes must all be in good condition.

- Do not use the tow hooks to pull a vehicle out of mud, sand or other conditions from which the vehicle cannot be driven out under its own power.
- Avoid towing a vehicle heavier than the vehicle doing the towing.
- The drivers of both vehicles should communicate with each other frequently.

⚠ CAUTION

- ***Attach a towing strap to the tow hook.***
- ***Using a portion of the vehicle other than the tow hooks for towing may damage the body of your vehicle.***
- ***Use only a cable or chain specifically intended for use in towing vehicles. Securely fasten the cable or chain to the towing hook provided.***

- Before emergency towing, check if the hook is not broken or damaged.
- Fasten the towing cable or chain securely to the hook.
- Do not jerk the hook. Apply it steadily and with even force.
- To avoid damaging the hook, do not pull from the side or at a vertical angle. Always pull straight ahead.

FarmaSOS.com

⚠ WARNING

Use extreme caution when towing the vehicle.

- **Avoid sudden starts or erratic driving maneuvers which would place excessive stress on the emergency towing hook and towing cable or chain. The hook and towing cable or chain may break and cause serious injury or damage.**
- **If the disabled vehicle is unable to move, do not forcibly continue the towing. Contact an authorized KIA dealer or a commercial tow truck service for assistance.**
- **Tow the vehicle as straight ahead as possible.**
- **Keep away from the vehicle during towing.**

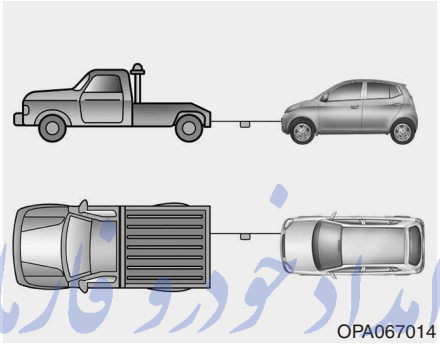

OPA067014

- Use a towing strap less than 5 m (16 feet) long. Attach a white or red cloth (about 30 cm (12 inches) wide) in the middle of the strap for easy visibility.
- Drive carefully so that the towing strap does not get loose during towing.

F080301AUN

Emergency towing precautions

- Turn the ignition switch to ACC so the steering wheel isn't locked.
- Place the transaxle shift lever in N (Neutral).
- Release the parking bake.
- Press the brake pedal with more force than normal since you will have reduced brake performance.
- More steering effort will be required because the power steering system will be disabled.
- If you are driving down a long hill, the brakes may overheat and brake performance will be reduced. Stop often and let the brakes cool off.

⚠ CAUTION - Automatic transaxle

- ***If the car is being towed with all four wheels on the ground, it can be towed only from the front. Be sure that the transaxle is in neutral. Be sure the steering is unlocked by placing the ignition switch in the ACC position. A driver must be in the towed vehicle to operate the steering and brakes.***
- ***To avoid serious damage to the automatic transaxle, limit the vehicle speed to 15 km/h (10 mph) and drive less than 1.5 km (1 mile) when towing.***
- ***Before towing, check the level of the automatic transaxle fluid. If it is below the "HOT" range on the dipstick, add fluid. If you cannot add fluid, a towing dolly must be used.***

FarmaSOS.com

EMERGENCY COMMODITY (IF EQUIPPED)

F110000AUN

There are some emergency commodities in the vehicle to help you respond to the emergency situation.

F110100ASA

Fire extinguisher

If there is small fire and you know how to use the fire extinguisher, take the following steps carefully.

1. Pull out the pin at the top of the extinguisher that keeps the handle from being accidentally pressed.
2. Aim the nozzle toward the base of the fire.
3. Stand approximately 2.5 m (8 ft) away from the fire and squeeze the handle to discharge the extinguisher. If you release the handle, the discharge will stop.
4. Sweep the nozzle back and forth at the base of the fire. After the fire appears to be out, watch carefully since it may re-ignite.

F110200AUN

First aid kit

There are some items such as scissors, bandage and adhesive tape and etc. in the kit to give first aid to an injured person.

F110300AUN

Triangle reflector

Place the triangle reflector on the road to warn oncoming vehicles during emergencies, such as when the vehicle is parked by the roadside due to any problems.

تلفن شبانه روزی: ۰۲۱۰۸۸۸۶۲۰۸۵

F110400AUN

Tire pressure gauge (If equipped)

Tires normally lose some air in day-to-day use, and you may have to add a few pounds of air periodically and it is not usually a sign of a leaking tire, but of normal wear. Always check tire pressure when the tires are cold because tire pressure increases with temperature.

FarmaSOS.com

To check the tire pressure, take the following steps;

1. Unscrew the inflation valve cap that is located on the rim of the tire.
2. Press and hold the gauge against the tire valve. Some air will escape as you begin and more will escape if you don't press the gauge in firmly.
3. A firm non-leaking push will activate the gauge.
4. Read the tire pressure on the gauge to know whether the tire pressure is low or high.
5. Adjust the tire pressures to the specified pressure. Refer to “Tires and wheels” in section 8.
6. Reinstall the inflation valve cap.

Engine compartment / 7-2
Maintenance services / 7-4
Owner maintenance / 7-6
Scheduled maintenance service / 7-8
Explanation of scheduled maintenance items / 7-21
Engine oil / 7-23
Engine coolant / 7-25
Brakes/clutch fluid / 7-27
Automatic transaxle fluid / 7-29
Washer fluid / 7-31
Parking brake / 7-31
Fuel filter / 7-32
Air cleaner / 7-34
Climate control air filter / 7-35
Wiper blades / 7-37
Battery / 7-38

آزاد خودرو فارما
پاسخگوی شبانه روزی: ۰۲۱-۸۸۸۶۲۰۸۵
FarmaSOS.com

Maintenance 7

Tires and wheels / 7-41
Fuses / 7-51
Light bulbs / 7-58
Appearance care / 7-64
Emission control system / 7-70

ENGINE COMPARTMENT

■ **Gasoline Engine**

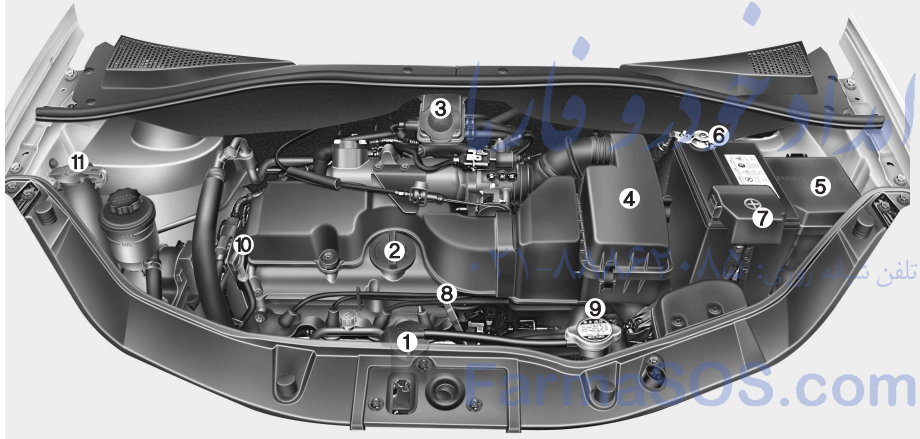

1. Engine coolant reservoir
2. Engine oil filler cap
3. Brake fluid reservoir
4. Air cleaner
5. Fuse box
6. Negative battery terminal
7. Positive battery terminal
8. Automatic transaxle fluid dipstick*
9. Radiator cap
10. Engine oil dipstick
11. Windshield washer fluid reservoir

* : if equipped

* The actual engine compartment in the vehicle may differ from the illustration.

OSA010003-2

G010000ASA

FarsiSOS.com

■ **Diesel Engine**

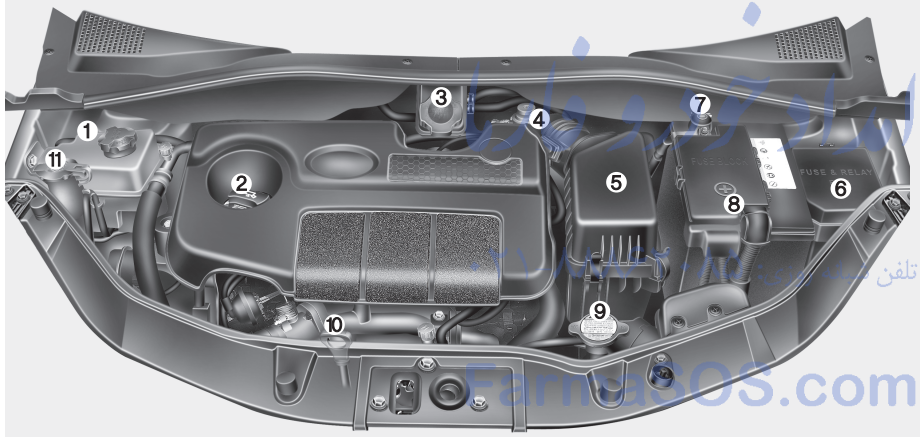

1. Engine coolant reservoir
2. Engine oil filler cap
3. Brake fluid reservoir
4. Fuel filter
5. Air cleaner
6. Fuse box
7. Negative battery terminal
8. Positive battery terminal
9. Radiator cap
10. Engine oil dipstick
11. Windshield washer fluid reservoir

* The actual engine compartment in the vehicle may differ from the illustration.

OSA077002

FarmaSOS.com

MAINTENANCE SERVICES

G020000AUN

You should exercise the utmost care to prevent damage to your vehicle and injury to yourself whenever performing any maintenance or inspection procedures.

Should you have any doubts concerning the inspection or servicing of your vehicle, we strongly recommend that you have an authorized KIA dealer perform this work.

An authorized KIA dealer has factory-trained technicians and genuine KIA parts to service your vehicle properly. For expert advice and quality service, see an authorized KIA dealer.

Inadequate, incomplete or insufficient servicing may result in operational problems with your vehicle that could lead to vehicle damage, an accident, or personal injury.

G020100AUN

Owner's responsibility

✻ NOTICE

Maintenance Service and Record Retention are the owner's responsibility.

You should retain documents that show proper maintenance has been performed on your vehicle in accordance with the scheduled maintenance service charts shown on the following pages. You need this information to establish your compliance with the servicing and maintenance requirements of your vehicle warranties.

Detailed warranty information is provided in your Warranty & Maintenance book.

Repairs and adjustments required as a result of improper maintenance or a lack of required maintenance are not covered.

We recommend you have your vehicle maintained and repaired by an authorized KIA dealer. An authorized KIA dealer meets KIA's high service quality standards and receives technical support from KIA in order to provide you with a high level of service satisfaction.

G020200AUN

Owner maintenance precautions

Improper or incomplete service may result in problems. This section gives instructions only for the maintenance items that are easy to perform.

As explained earlier in this section, several procedures can be done only by an authorized KIA dealer with special tools.

✻ NOTICE

Improper owner maintenance during the warranty period may affect warranty coverage. For details, read the separate Warranty & Maintence book provided with the vehicle. If you're unsure about any servicing or maintenance procedure, have it done by an authorized KIA dealer.

FarmaSOS.com

⚠ WARNING - Maintenance work

- **Performing maintenance work on a vehicle can be dangerous. You can be seriously injured while performing some maintenance procedures. If you lack sufficient knowledge and experience or the proper tools and equipment to do the work, have it done by an authorized KIA dealer.**
- **Working under the hood with the engine running is dangerous. It becomes even more dangerous when you wear jewelry or loose clothing. These can become entangled in moving parts and result in injury. Therefore, if you must run the engine while working under the hood, make certain that you remove all jewelry (especially rings, bracelets, watches, and necklaces) and all neckties, scarves, and similar loose clothing before getting near the engine or cooling fans.**

⚠ WARNING - Diesel Engine

Never work on the injection system with the engine running or within 30 seconds after shutting the engine off. High-pressure pump, rail, injectors and high-pressure pipes are subject to high pressure even after the engine stopped. The fuel jet produced by fuel leaks may cause serious injury, if it touches the body. People using pacemakers should not move than 30cm closer to the ECU or wiring harness within the engine room while engine is running, since the high currents in the electronic engine control system produce considerable magnetic fields.

FarmaSOS.com

OWNER MAINTENANCE

G030000AUN

The following lists are vehicle checks and inspections that should be performed by the owner or an authorized KIA dealer at the frequencies indicated to help ensure safe, dependable operation of your vehicle.

Any adverse conditions should be brought to the attention of your dealer as soon as possible.

These Owner Maintenance Checks are generally not covered by warranties and you may be charged for labor, parts and lubricants used.

Owner maintenance schedule

G030101AUN

When you stop for fuel:

- Check the engine oil level.
- Check the coolant level in the coolant reservoir.
- Check the windshield washer fluid level.
- Look for low or under-inflated tires.

⚠ WARNING

Be careful when checking your engine coolant level when the engine is hot. Scalding hot coolant and steam may blow out under pressure. This could cause burns or other serious injury.

FarmaSOS.com

G030102AUN

While operating your vehicle:

- Note any changes in the sound of the exhaust or any smell of exhaust fumes in the vehicle.
- Check for vibrations in the steering wheel. Notice any increased steering effort or looseness in the steering wheel, or change in its straight-ahead position.
- Notice if your vehicle constantly turns slightly or “pulls” to one side when traveling on smooth, level road.
- When stopping, listen and check for unusual sounds, pulling to one side, increased brake pedal travel or “hard-to-push” brake pedal.
- If any slipping or changes in the operation of your transaxle occurs, check the transaxle fluid level.
- Check the automatic transaxle P (Park) function.
- Check the parking brake.
- Check for fluid leaks under your vehicle (water dripping from the air conditioning system during or after use is normal).

G030103AUN

At least monthly:

- Check coolant level in the engine coolant reservoir.
- Check the operation of all exterior lights, including the stoplights, turn signals and hazard warning flashers.
- Check the inflation pressures of all tires including the spare.

G030104AUN

At least twice a year (i.e., every Spring and Fall):

- Check radiator, heater and air conditioning hoses for leaks or damage.
- Check windshield washer spray and wiper operation. Clean the wiper blades with clean cloth dampened with washer fluid.
- Check the headlight alignment.
- Check the muffler, exhaust pipes, shields and clamps.
- Check the lap/shoulder belts for wear and function.
- Check for worn tires and loose wheel lug nuts.

امداد خودرو فارما
تلفن شبانه روزی: ۰۲۱-۸۸۸۶۲۰۸۵
FarmaSOS.com

G030105APA

At least once a year:

- Clean body and door drain holes.
- Lubricate door hinges and checks, and hood hinges.
- Lubricate door and hood locks and latches.
- Lubricate door rubber weatherstrips.
- Check the air conditioning system.
- Inspect and lubricate automatic transaxle linkage and controls.
- Clean battery and terminals.
- Check the brake/clutch fluid level.

SCHEDULED MAINTENANCE SERVICE

G040000ASA

Follow Normal Maintenance Schedule if the vehicle is usually operated where none of the following conditions apply. If any of the following conditions apply, follow Maintenance Under Severe Usage Conditions.

- Repeated short distance driving.
- Driving in dusty conditions or sandy areas.
- Extensive use of brakes.
- Driving in areas where salt or other corrosive materials are being used.
- Driving on rough or muddy roads.
- Driving in mountainous areas.
- Extended periods of idling or low speed operation.
- Driving for a prolonged period in cold temperatures and/or extremely humid climates.
- More than 50% driving in heavy city traffic during hot weather above 32°C (90°F).

If your vehicle is operated under the above conditions, you should inspect, replace or refill more frequently than the following Normal Maintenance Schedule. After the periods or distance shown in the chart, continue to follow the prescribed maintenance intervals.

امداد خودرو فارما
تلفن شبانه روزی: ۰۲۱-۸۸۸۶۲۰۸۵
FarmaSOS.com

G040100ASA

NORMAL MAINTENANCE SCHEDULE - GASOLINE ENGINE

MAINTENANCE INTERVALS / MAINTENANCE ITEM		Number of months or driving distance, whichever comes first							
	Months	12	24	36	48	60	72	84	96
	Miles×1,000	10	20	30	40	50	60	70	80
	Km×1,000	15	30	45	60	75	90	105	120
Drive belts *1	For Europe	At first, inspect 90,000 km (60,000 miles) or 72 months after that, inspect every 30,000 km (20,000 miles) or 24 months							
	Except Europe		I		I		I		I
Engine oil and engine oil filter *2	For Middle East	Replace every 10,000 km (6,250 miles) or 12 months *3							
	Except Middle East	R	R	R	R	R	R	R	R
Engine timing belt		Replace every 135,000 km (90,000 miles)							
Tensioner, idler and damper pulley		Inspect when replacing the drive belt or timing belt							
Air cleaner filter	For China, India, Middle East	R	R	R	R	R	R	R	R
	Except China, India, Middle East	I	I	R	I	I	R	I	I
Spark plugs	For Europe		R		R		R		R
	Except Europe	Replace every 40,000 km (25,000 miles) *4							

امداد خودرو فارس
۰۲۱-۸۸۸۶۲۰۸۵
FarmaSOS.com

I : Inspect and if necessary, adjust, correct, clean or replace. R : Replace or change.

*1 : Adjust alternator and power steering (and water pump drive belt) and air conditioner drive belt (if equipped). Inspect and if necessary correct or replace.

*2 : Check the engine oil level and leak every 500 km (350 miles) or before starting a long trip.

*3 : Driving in summer season temperature over 40 °C (104 °F - SAUDI, UAE, OMAN, KUWAIT, BAHRAIN, QATAR, IRAN, YEMEN ETC) or driving over 170 km/h (106 mile/h) must conform the severe driving condition.

*4 : For your convenience, it can be replaced prior to it's interval when you do maintenance of other items.

NORMAL MAINTENANCE SCHEDULE - GASOLINE ENGINE (CONT.)

MAINTENANCE ITEM / MAINTENANCE INTERVALS		Number of months or driving distance, whichever comes first							
	Months	12	24	36	48	60	72	84	96
	Miles×1,000	10	20	30	40	50	60	70	80
	Km×1,000	15	30	45	60	75	90	105	120
Valve clearance *5			I		I		I		I
Vapor hose and fuel filler cap			I		I		I		I
Vacuum hose			I		I		I		I
Vacuum hose (for VGT & throttle body & SCV) (if equipped)		I	I	I	I	I	I	I	I
Fuel filter *6	For Europe				I				I
	Except Europe				R				R
Fuel lines, hoses and connections		I	I	I	I	I	I	I	I
Cooling system		Inspect “Coolant level and leak” every day Inspect “Water pump” when replacing the drive belt or timing belt							

امداد خودرو فارسا
تلفن شبانه روزی ۰۲۱-۸۸۸۶۲۰۸۵
FarmaSOS.com

I : Inspect and if necessary, adjust, correct, clean or replace.
R : Replace or change.
*5 : Inspect for excessive valve noise and/or engine vibration and adjust if necessary. An authorized KIA dealer should perform the operation.
*6 : In case of hard starting or abnormal fuel pressure, replace the fuel filter immediately regardless of maintenance schedule.

NORMAL MAINTENANCE SCHEDULE - GASOLINE ENGINE (CONT.)

MAINTENANCE ITEM / MAINTENANCE INTERVALS		Number of months or driving distance, whichever comes first							
	Months	12	24	36	48	60	72	84	96
	Miles×1,000	10	20	30	40	50	60	70	80
	Km×1,000	15	30	45	60	75	90	105	120
Engine coolant *7	For Europe	At first, replace at 100,000 km (62,500 miles) or 60 months: after that, replace every 40,000 km (25,000 miles) or 24 months *8							
	Except Europe	At first, replace at 48,000 km (30,000 miles) or 24 months: after that, replace every 40,000 km (25,000 miles) or 24 months *8							
Battery condition		I	I	I	I	I	I	I	I
All electrical systems			I		I		I		I
Brake lines, hoses and connections		I	I	I	I	I	I	I	I
Brake pedal, clutch pedal (if equipped)			I		I		I		I
Parking brake			I		I		I		I
Brake/clutch fluid	For Europe	I	R	I	R	I	R	I	R
	Except Europe	I	I	I	I	I	I	I	I
Disc brakes and pads		I	I	I	I	I	I	I	I
Drum brakes and linings (if equipped)			I		I		I		I

امداد خودرو فارما
۰۲۱-۸۸۶۲۰۸۵ تلفن شبانه روزی
FarmaSOS.com

I : Inspect and if necessary, adjust, correct, clean or replace.

R : Replace or change.

*7 : When adding coolant, use only a qualified coolant additive for your vehicle and never mix hard water in the coolant filled at the factory. An improper coolant mixture can result in serious malfunction or engine damage.

*8 : For your convenience, it can be replaced prior to it's interval when you do maintenance of other items.

NORMAL MAINTENANCE SCHEDULE - GASOLINE ENGINE (CONT.)

MAINTENANCE INTERVALS / MAINTENANCE ITEM		Number of months or driving distance, whichever comes first							
	Months	12	24	36	48	60	72	84	96
	Miles×1,000	10	20	30	40	50	60	70	80
	Km×1,000	15	30	45	60	75	90	105	120
Steering gear rack, linkage and boots		I	I	I	I	I	I	I	I
Driveshaft and boots			I		I		I		I
Tire (pressure & tread wear)		I	I	I	I	I	I	I	I
Front suspension ball joints		I	I	I	I	I	I	I	I
Bolt and nuts on chassis and body		I	I	I	I	I	I	I	I
Air conditioner refrigerant (if equipped)		I	I	I	I	I	I	I	I
Air conditioner compressor (if equipped)		I	I	I	I	I	I	I	I
Climate control air filter	For Europe		R		R		R		R
(if equipped)	Except Europe	R	R	R	R	R	R	R	R
Manual transaxle fluid (if equipped)					I				I
Automatic transaxle fluid (if equipped)					I				I

امداد خودرو فارما
۰۲۱-۸۸۶۲۰۸۵ تلفن شبانه روزی
FarmaSOS.com

I : Inspect and if necessary, adjust, correct, clean or replace.
R : Replace or change.

G040200ASA

MAINTENANCE UNDER SEVERE USAGE CONDITIONS - GASOLINE ENGINE

The following items must be serviced more frequently on cars mainly used under severe driving conditions.
Refer to the chart below for the appropriate maintenance intervals.

R : Replace I : Inspect and if necessary, adjust, correct, clean or replace

MAINTENANCE ITEM		Maintenance operation	Maintenance intervals	Driving condition
Engine oil and engine oil filter	For Middle East	R	Every 5,000 km (3,000 miles) or 6 months	A, B, C, D, E, F, G, H, I, K
	Except Middle East	R	Every 7,500 km (4,500 miles) or 6 months	
Air cleaner filter		R	Replace more frequently depending on the condition	C, E
Spark plugs		R	Replace more frequently depending on the condition	B, H
Engine timing belt		R	Every 90,000 km (60,000 miles) or 72 months	B, C, D, E, F, G, I
Manual transaxle fluid (if equipped)		R	Every 120,000 km (80,000 miles)	C, D, E, G, H, I, K
Automatic transaxle fluid (if equipped)	For Europe	R	Every 90,000 km (60,000 miles)	A, C, D, E, F, G, H, I, K
	Except Europe	R	Every 100,000 km (62,000 miles)	
Steering gear rack, linkage and boots		I	Inspect more frequently depending on the condition	C, D, E, F, G

FarmaSOS.com

MAINTENANCE ITEM	Maintenance operation	Maintenance intervals	Driving condition
Front suspension ball joints	I	Inspect more frequently depending on the condition	C, D, E, F, G
Disc brakes and pads, calipers and rotors	I	Inspect more frequently depending on the condition	C, D, E, G, H
Drum brakes and linings (if equipped)	I	Inspect more frequently depending on the condition	C, D, E, G, H
Parking brake	I	Inspect more frequently depending on the condition	C, D, G, H
Driveshaft and boots	I	Inspect more frequently depending on the condition	B, C, D, E, F, G, H, I, J, K
Climate control air filter (if equipped)	I	Inspect more frequently depending on the condition	C, E, G

امداد خودرو فارما
تلفن شبانه روزی: ۰۲۱-۸۸۸۶۲۰۸۵
FarmaSOS.com

Severe driving conditions

A : Repeated short distance driving
B : Extensive idling
C : Driving in dusty, rough roads
D : Driving in areas using salt or other corrosive materials or in very cold weather
E : Driving in sandy areas
F : More than 50 % driving in heavy city traffic during hot weather above 32°C (90°F)
G : Driving in mountainous areas
H : Towing a trailer
I : Driving as patrol car, taxi, commercial car or vehicle towing
J : Driving in very cold weather
K : Driving over 170 km/h (106 mile/h)
L : Frequently driving in stop-and-go conditions

G040300ASA

NORMAL MAINTENANCE SCHEDULE - DIESEL ENGINE

MAINTENANCE INTERVALS / MAINTENANCE ITEM		Number of months or driving distance, whichever comes first							
	Months	12	24	36	48	60	72	84	96
	Miles×1,000	12.5	25	37.5	50	62.5	75	87.5	100
	Km×1,000	20	40	60	80	100	120	140	160
Drive belts		At first, inspect 80,000 km (50,000 miles) or 48 months after that, inspect every 20,000 km (12,500 miles) or 12 months							
Engine oil and engine oil filter *1	For Europe	R	R	R	R	R	R	R	R
	Except Europe	Replace every 10,000 km (6,000 miles) or 12 months							
Tensioner, idler and damper pulley		Inspect when replacing the drive belt							
Air cleaner filter	For China, India, Middle East	Replace every 15,000 km (10,000 miles)							
	Except China, India, Middle East	I	R	I	R	I	R	I	R

I : Inspect and if necessary, adjust, correct, clean or replace.
R : Replace or change.
*1 : Check the engine oil level and leak every 500 km (350 miles) or before starting a long trip.

FarmaSOS.com

NORMAL MAINTENANCE SCHEDULE - DIESEL ENGINE (CONT.)

MAINTENANCE INTERVALS / MAINTENANCE ITEM		Number of months or driving distance, whichever comes first							
	Months	12	24	36	48	60	72	84	96
	Miles×1,000	12.5	25	37.5	50	62.5	75	87.5	100
	Km×1,000	20	40	60	80	100	120	140	160
Fuel filler cap			I		I		I		I
Vacuum hose (for VGT & throttle body & SCV) (if equipped)		I	I	I	I	I	I	I	I
Fuel filter cartridge *2	For Europe	I	I	R	I	I	R	I	I
	Except Europe	Replace every 30,000 km (20,000 miles) or 24 months							
Fuel lines, hoses and connections		I	I	I	I	I	I	I	I
Cooling system		Inspect “Coolant level adjustment and leak” every day							

I : Inspect and if necessary, adjust, correct, clean or replace.

R : Replace or change.

*2 : This interval depends on fuel quality. It is applicable only when using a qualified fuel, "EN 590 or equivalent".
If the diesel fuel specifications don't meet the European standards EN 590, replace it more frequently. Consult an authorized KIA dealer for details.
In case of low engine power or fuel pressure decrease of the fuel filter, replace fuel filter immediately regardless of maintenance schedule.

امداد خودرو فارما
۰۲۱-۸۸۸۶۲۰۰۰
FarmaSOS.com

NORMAL MAINTENANCE SCHEDULE - DIESEL ENGINE (CONT.)

MAINTENANCE ITEM / MAINTENANCE INTERVALS		Number of months or driving distance, whichever comes first							
	Months	12	24	36	48	60	72	84	96
	Miles×1,000	12.5	25	37.5	50	62.5	75	87.5	100
	Km×1,000	20	40	60	80	100	120	140	160
Engine coolant *3	For Europe	At first, replace at 100,000 km (62,500 miles) or 60 months: after that, replace every 40,000 km (25,000 miles) or 24 months *4							
	Except Europe	At first, replace at 48,000 km (30,000 miles) or 24 months: after that, replace every 40,000 km (25,000 miles) or 24 months *4							
Battery condition		I	I	I	I	I	I	I	I
All electrical systems		I	I	I	I	I	I	I	I
Brake lines, hoses and connections		I	I	I	I	I	I	I	I
Brake pedal, clutch pedal (if equipped)		I	I	I	I	I	I	I	I
Parking brake		I	I	I	I	I	I	I	I
Brake/clutch fluid	For Europe	I	R	I	R	I	R	I	R
	Except Europe	I	I	I	I	I	I	I	I
Disc brakes and pads		I	I	I	I	I	I	I	I
Drum brakes and linings (if equipped)			I		I		I		I

I : Inspect and if necessary, adjust, correct, clean or replace.
R : Replace or change.
*3 : When adding coolant, use only a qualified coolant additive for your vehicle and never mix hard water in the coolant filled at the factory. An improper coolant mixture can result in serious malfunction or engine damage.
*4 : For your convenience, it can be replaced prior to it's interval when you do maintenance of other items.

ParmaSOS.com

NORMAL MAINTENANCE SCHEDULE - DIESEL ENGINE (CONT.)

MAINTENANCE INTERVALS / MAINTENANCE ITEM	Number of months or driving distance, whichever comes first							
Months	12	24	36	48	60	72	84	96
Miles×1,000	12.5	25	37.5	50	62.5	75	87.5	100
Km×1,000	20	40	60	80	100	120	140	160
Steering gear rack, linkage and boots	I	I	I	I	I	I	I	I
Driveshaft and boots	I	I	I	I	I	I	I	I
Tire (pressure & tread wear)	I	I	I	I	I	I	I	I
Front suspension ball joints	I	I	I	I	I	I	I	I
Bolt and nuts on chassis and body	I	I	I	I	I	I	I	I
Air conditioner refrigerant (if equipped)	I	I	I	I	I	I	I	I
Air conditioner compressor (if equipped)	I	I	I	I	I	I	I	I
Climate control air filter (if equipped)	R	R	R	R	R	R	R	R
Manual transaxle fluid (if equipped)			I			I		

امداد خودرو فارما
۰۲۱-۸۸۶۲۰۸۵ تلفن شبانه روزی
FarmaSOS.com

I : Inspect and if necessary, adjust, correct, clean or replace.
R : Replace or change.

G040400ASA

MAINTENANCE UNDER SEVERE USAGE CONDITIONS - DIESEL ENGINE

The following items must be serviced more frequently on cars mainly used under severe driving conditions.
Refer to the chart below for the appropriate maintenance intervals.

R : Replace I : Inspect and if necessary, adjust, correct, clean or replace

MAINTENANCE ITEM		Maintenance operation	Maintenance intervals	Driving condition
Engine oil and engine oil filter	For Europe	R	Every 10,000 km (6,200 miles) or 6 months	A, B, C, F, G, H, I, J, K, L
	Except Europe	R	Every 5,000 km (3,000 miles) or 6 months	
Air cleaner filter		R	Replace more frequently depending on the condition	C, E
Manual transaxle fluid (if equipped)		R	Every 120,000 km (75,000 miles)	C, D, E, G, H, I, K
Steering gear rack, linkage and boots		I	Inspect more frequently depending on the condition	C, D, E, F, G

FarmaSOS.com

MAINTENANCE ITEM	Maintenance operation	Maintenance intervals	Driving condition
Front suspension ball joints	I	Inspect more frequently depending on the condition	C, D, E, F, G
Disc brakes and pads, calipers and rotors	I	Inspect more frequently depending on the condition	C, D, E, G, H
Drum brakes and linings (if equipped)	I	Inspect more frequently depending on the condition	C, D, E, G, H
Parking brake	I	Inspect more frequently depending on the condition	C, D, G, H
Drive shaft and boots	I	Inspect more frequently depending on the condition	C, D, E, F, G, H, I
Climate control air filter (if equipped)	I	Inspect more frequently depending on the condition	C, E, G

امداد خودرو فارما
تلفن شبانه روزی: ۰۲۱-۸۸۸۶۲۰۸۵
FarmaSOS.com

Severe driving conditions

A : Repeated short distance driving
B : Extensive idling
C : Driving in dusty, rough roads
D : Driving in areas using salt or other corrosive materials or in very cold weather
E : Driving in sandy areas
F : More than 50 % driving in heavy city traffic during hot weather above 32 °C (90 °F)
G : Driving in mountainous areas.
H : Towing a trailer
I : Driving for patrol car, taxi, commercial car or vehicle towing
J : Driving in very cold weather
K : Driving over 170 km/h (106 mile/h)
L : Frequently driving in stop-and-go conditions

EXPLANATION OF SCHEDULED MAINTENANCE ITEMS

G050100AUN

Engine oil and filter

The engine oil and filter should be changed at the intervals specified in the maintenance schedule. If the car is being driven in severe conditions, more frequent oil and filter changes are required.

G050200AUN

Drive belts

Inspect all drive belts for evidence of cuts, cracks, excessive wear or oil saturation and replace if necessary. Drive belts should be checked periodically for proper tension and adjusted as necessary.

G050300AUN

Fuel filter (cartridge)

A clogged filter can limit the speed at which the vehicle may be driven, damage the emission system and cause multiple issues such as hard starting. If an excessive amount of foreign matter accumulates in the fuel tank, the filter may require replacement more frequently.

After installing a new filter, run the engine for several minutes, and check for leaks at the connections. Fuel filters should be installed by an authorized KIA dealer.

G050400AUN

Fuel lines, fuel hoses and connections

Check the fuel lines, fuel hoses and connections for leakage and damage. Have an authorized KIA dealer replace any damaged or leaking parts immediately.

⚠ WARNING - Diesel only

Never work on the injection system with the engine running or within 30 seconds after shutting off the engine. High pressure pump, rail, injectors and high pressure pipes are subject to high pressure even after the engine has stopped. The fuel jet produced by fuel leaks may cause serious injury, if touched. People using pacemakers should not move than 30cm closer to the ECU or wiring harness within the engine room while engine is running, since the high currents in the Common Rail system produce considerable magnetic fields.

G050600AUN

Vapor hose and fuel filler cap

The vapor hose and fuel filler cap should be inspected at those intervals specified in the maintenance schedule. Make sure that a new vapor hose or fuel filler cap is correctly replaced.

G050700AUN

Vacuum crankcase ventilation hoses (if equipped)

Inspect the surface of hoses for evidence of heat and/or mechanical damage. Hard and brittle rubber, cracking, tears, cuts, abrasions, and excessive swelling indicate deterioration. Particular attention should be paid to examine those hose surfaces nearest to high heat sources, such as the exhaust manifold.

Inspect the hose routing to assure that the hoses do not come in contact with any heat source, sharp edges or moving component which might cause heat damage or mechanical wear. Inspect all hose connections, such as clamps and couplings, to make sure they are secure, and that no leaks are present. Hoses should be replaced immediately if there is any evidence of deterioration or damage.

G050800AUN

Air cleaner filter

A Genuine KIA air cleaner filter is recommended when the filter is replaced.

G050900AUN

Spark plugs (for gasoline engine)

Make sure to install new spark plugs of the correct heat range.

G051000AUN

Valve clearance (if equipped)

Inspect excessive valve noise and/or engine vibration and adjust if necessary. An authorized KIA dealer should perform the operation.

G051100AUN

Cooling system

Check the cooling system components, such as radiator, coolant reservoir, hoses and connections for leakage and damage. Replace any damaged parts.

G051200AUN

Coolant

The coolant should be changed at the intervals specified in the maintenance schedule.

G051300AUN

Manual transaxle fluid (if equipped)

Inspect the manual transaxle fluid according to the maintenance schedule.

G051400AUN

Automatic transaxle fluid (if equipped)

The fluid level should be in the "HOT" range of the dipstick, after the engine and transaxle are at normal operating temperature. Check the automatic transaxle fluid level with the engine running and the transaxle in neutral, with the parking brake properly applied.

G051500AUN

Brake hoses and lines

Visually check for proper installation, chafing, cracks, deterioration and any leakage. Replace any deteriorated or damaged parts immediately.

G051600ASA

Brake fluid

Check the brake fluid level in the brake fluid reservoir. The level should be between “MIN” and “MAX” marks on the side of the reservoir. Use only hydraulic brake fluid conforming to DOT 3 or DOT 4 specification.

G051700AUN

Parking brake

Inspect the parking brake system including the parking brake lever and cables.

G051800APA

Rear brake drums and linings (if equipped)

Check the rear brake drums and linings for scoring, burning, leaking fluid, broken parts, and excessive wear.

G051900AUN

Brake discs, pads, calipers and rotors

Check the pads for excessive wear, discs for run out and wear, and calipers for fluid leakage.

G052100AUN

Suspension mounting bolts

Check the suspension connections for looseness or damage. Retighten to the specified torque.

G052200AUN

Steering gear box, linkage & boots/lower arm ball joint

With the vehicle stopped and engine off, check for excessive free-play in the steering wheel.

Check the linkage for bends or damage. Check the dust boots and ball joints for deterioration, cracks, or damage. Replace any damaged parts.

G050500AUN

Timing belt (if equipped)

Inspect all parts related to the timing belt for damage and deformation. Replace any damaged parts immediately.

G052400AUN

Drive shafts and boots

Check the drive shafts, boots and clamps for cracks, deterioration, or damage. Replace any damaged parts and, if necessary, repack the grease.

G052500AUN

Air conditioning refrigerant (if equipped)

Check the air conditioning lines and connections for leakage and damage.

امداد خودرو ملی
تلفن شبانه روزی: ۰۲۱-۸۸۸۶۲۰۸۵
FarmaSOS.com

ENGINE OIL

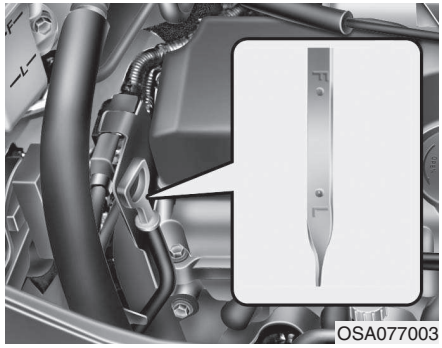

G060100AUN

Checking the engine oil level

1. Be sure the vehicle is on level ground.
2. Start the engine and allow it to reach normal operating temperature.

3. Turn the engine off and wait for a few minutes (about 5 minutes) for the oil to return to the oil pan.
4. Pull the dipstick out, wipe it clean, and re-insert it fully.

⚠ WARNING - Radiator hose

Be very careful not to touch the radiator hose when checking or adding the engine oil as it may be hot enough to burn you.

5. Pull the dipstick out again and check the level. The level should be between F and L.

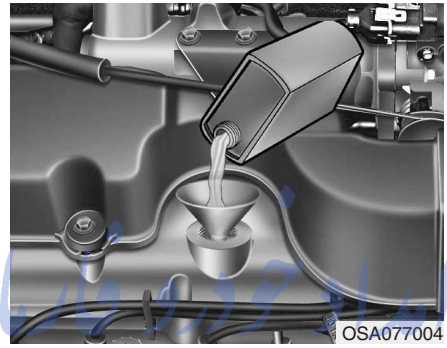

OSA077004

If it is near or at L, add enough oil to bring the level to F. **Do not overfill.**

Use a funnel to help prevent oil from being spilled on engine components.

Use only the specified engine oil. (Refer to "Recommended lubricants and capacities" in section 8.)

⚠ CAUTION

Do not overfill the engine oil. It may damage the engine.

G060200ASA

Changing the engine oil and filter

Have the engine oil and filter changed by an authorized KIA dealer according to the Maintenance Schedule at the beginning of this section.

⚠ WARNING

Used engine oil may cause skin irritation or cancer if left in contact with the skin for prolonged periods of time. Used engine oil contains chemicals that have caused cancer in laboratory animals. Always protect your skin by washing your hands thoroughly with soap and warm water as soon as possible after handling used oil.

FordSOS.com

ENGINE COOLANT

G070000AUN

The high-pressure cooling system has a reservoir filled with year-round antifreeze coolant. The reservoir is filled at the factory.

Check the antifreeze protection and coolant level at least once a year, at the beginning of the winter season, and before traveling to a colder climate.

G070100ASA

Checking the coolant level

⚠ WARNING - Removing radiator cap

- **Never attempt to remove the radiator cap while the engine is operating or hot. Doing so might lead to cooling system and engine damage and hot coolant or steam could cause serious personal injury.**

(Continued)

(Continued)

- **Turn the engine off and wait until it cools down. Use extreme care when removing the radiator cap. Wrap a thick towel around it, and turn it counterclockwise slowly to the first stop. Step back while the pressure is released from the cooling system. When you are sure all the pressure has been released, press down on the cap, using a thick towel, and continue turning counterclockwise to remove it.**
- **Even if the engine is not operating, do not remove the radiator cap or the drain plug while the engine and radiator are hot. Hot coolant and steam may still blow out under pressure, causing serious injury.**

■ Gasoline Engine

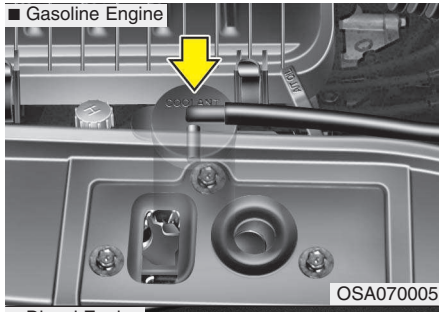

OSA070005

■ Diesel Engine

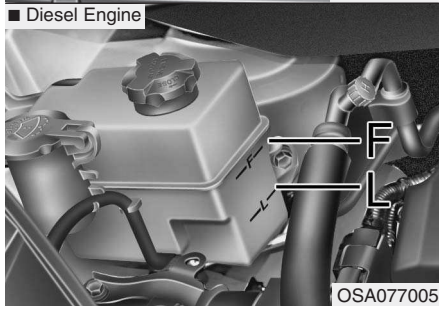

OSA077005

Check the condition and connections of all cooling system hoses and heater hoses. Replace any swollen or deteriorated hoses.

The coolant level should be filled between F and L marks on the side of the coolant reservoir when the engine is cool.

FarmaSOS.com

If the coolant level is low, add enough specified coolant to provide protection against freezing and corrosion. Bring the level to F, but do not overfill. If frequent additions are required, see an authorized KIA dealer for a cooling system inspection.

G070101AUN

Recommended engine coolant

- Use only soft (de-mineralized) water in the coolant mixture.
- The engine in your vehicle has aluminum engine parts and must be protected by an ethylene-glycol-based coolant to prevent corrosion and freezing.
- DO NOT USE alcohol or methanol coolant or mix them with the specified coolant.
- Do not use a solution that contains more than 60% antifreeze or less than 35% antifreeze, which would reduce the effectiveness of the solution.

For mixture percentage, refer to the following table.

Ambient Temperature	Mixture Percentage (volume)	
	Antifreeze	Water
-15°C (5°F)	35	65
-25°C (-13°F)	40	60
-35°C (-31°F)	50	50
-45°C (-49°F)	60	40

امداد خودرو ایران
تلفن شبانه روزی: ۰۲۱-۸۸۸۶۲۰۸۵
FarmaSOS.com

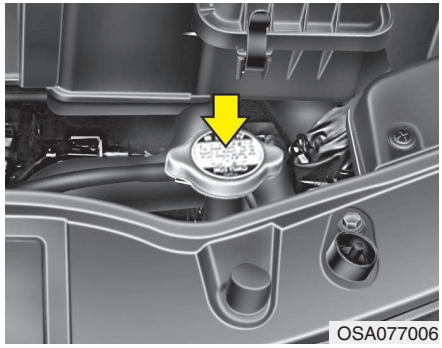
OSA077006

⚠ WARNING - Radiator cap

Do not remove the radiator cap when the engine and radiator are hot. Scalding hot coolant and steam may blow out under pressure causing serious injury.

G070200AUN

Changing the coolant

Have coolant changed by an authorized KIA dealer according to the Maintenance Schedule at the beginning of this section.

⚠ CAUTION

Put a thick cloth around the radiator cap before refilling the coolant in order to prevent the coolant from overflowing into engine parts such as the generator.

⚠ WARNING - Coolant

- **Do not use radiator coolant or antifreeze in the washer fluid reservoir.**
- **Radiator coolant can severely obscure visibility when sprayed on the windshield and may cause loss of vehicle control or damage to paint and body trim.**

BRAKE/CLUTCH FLUID (IF EQUIPPED)

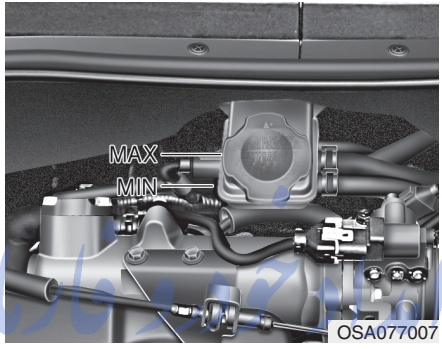

G080100ASA

Checking the brake/clutch fluid level

Check the fluid level in the reservoir periodically. The fluid level should be between MAX and MIN marks on the side of the reservoir.

Before removing the reservoir cap and adding brake/clutch fluid, clean the area around the reservoir cap thoroughly to prevent brake/clutch fluid contamination.

If the level is low, add fluid to the MAX level. The level will fall with accumulated mileage. This is a normal condition associated with the wear of the brake linings. If the fluid level is excessively low, have the brake system checked by an authorized KIA dealer.

Use only the specified brake/clutch fluid. (Refer to "Recommended lubricants or capacities" in section 8.)

Never mix different types of fluid.

⚠ WARNING - Loss of brake fluid

In the event the brake system requires frequent additions of fluid, the vehicle should be inspected by an authorized KIA dealer.

⚠ WARNING - Brake/clutch fluid

When changing and adding brake/clutch fluid, handle it carefully. Do not let it come in contact with your eyes. If brake/clutch fluid should come in contact with your eyes, immediately flush them with a large quantity of fresh tap water. Have your eyes examined by a doctor as soon as possible.

⚠ CAUTION

Do not allow brake/clutch fluid contact the vehicle's body paint, as paint damage will result. Brake/clutch fluid, which has been exposed to open air for an extended time should never be used as its quality cannot be guaranteed. It should be disposed of properly. Don't put in the wrong kind of fluid. A few drops of mineral-based oil, such as engine oil, in your brake/clutch system can damage brake system parts.

تلفن شبانه روزی: ۰۲۱-۸۸۸۶۲۰۸۵

FarmaSOS.com

AUTOMATIC TRANSAXLE FLUID (IF EQUIPPED)

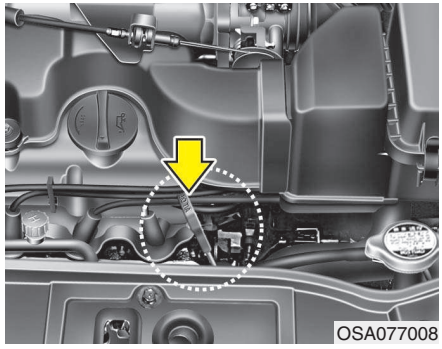

G100100ASA

Checking the automatic transaxle fluid level

The automatic transaxle fluid level should be checked regularly.

Keep the vehicle on level ground with the parking brake applied and check the fluid level according to the following procedure.

1. Place the shift lever in N (Neutral) position and confirm if the engine is running at normal idle speed.
2. After the transaxle is warmed up sufficiently [fluid temperature 70~80°C (158~176°F)], for example by 10 minutes usual driving, move the shift lever through all positions then place the shift lever in N(Neutral) or P(Park) position.

امداد خودرو فارما
تلفن شبانه روزی: ۰۲۱-۸۸۸۶۲۰۸۵
FarmaSOS.com

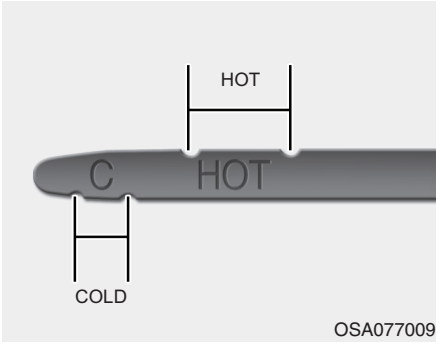

3. Confirm if the fluid level is in the "HOT" range on the level gauge. If the fluid level is lower, add the specified fluid from the fill hole. If the fluid level is higher, drain the fluid from the drain hole.
4. If the fluid level is checked in cold condition [fluid temperature 20~30°C (68~86°F)], add the fluid to the "COLD" line and then recheck the fluid level according to the above step 2.

⚠ WARNING - Transaxle fluid

The transaxle fluid level should be checked when the engine is at normal operating temperature. This means that the engine, radiator, radiator hose and exhaust system etc., are very hot. Exercise great care not to burn yourself during this procedure.

⚠ CAUTION

- ***Low fluid level causes transaxle slippage. Overfilling can cause foaming, loss of fluid and transaxle malfunction.***
- ***The use of a non-specified fluid could cause transaxle malfunction and failure.***

⚠ WARNING - Parking brake

To avoid sudden movement of the vehicle, apply the parking brake and depress the brake pedal before moving the shift lever.

✻ NOTICE

The "COLD" range is for reference only and should NOT be used to determine the transaxle fluid level.

✻ NOTICE

New automatic transaxle fluid should be red. The red dye is added so the assembly plant can identify it as automatic transaxle fluid and distinguish it from engine oil or antifreeze. The red dye, which is not an indicator of fluid quality, is not permanent. As the vehicle is driven, the automatic transaxle fluid will begin to look darker. The color may eventually appear light brown. Therefore, have an authorized KIA dealer change the automatic transaxle fluid according to the Scheduled Maintenance at the beginning of this section.

Use only the specified automatic transaxle fluid. (Refer to "Recommended lubricants or capacities" in section 8.)

G100200AUN

Changing the automatic transaxle fluid

Have the automatic transaxle fluid changed by an authorized KIA dealer according to the Maintenance Schedule at the beginning of this section.

WASHER FLUID

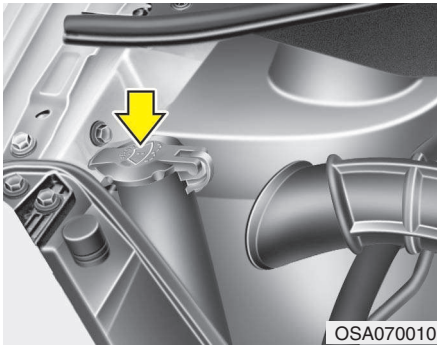

G120100ASA

Checking the washer fluid level

Check the fluid level in the washer fluid reservoir and add fluid if necessary. Plain water may be used if washer fluid is not available. However, use washer solvent with antifreeze characteristics in cold climates to prevent freezing.

⚠ WARNING - Coolant

- **Do not use radiator coolant or antifreeze in the washer fluid reservoir.**
- **Radiator coolant can severely obscure visibility when sprayed on the windshield and may cause loss of vehicle control or damage to the paint and body trim.**
- **Windshield Washer fluid agents contain some amounts of alcohol and can be flammable under certain circumstances. Do not allow sparks or flame come in contact with the washer fluid or the washer fluid reservoir. Damage to the vehicle or occupants could occur.**
- **Windshield washer fluid is poisonous to humans and animals. Do not drink and avoid coming in contact with the windshield washer fluid. Serious injury or death could occur.**

PARKING BRAKE

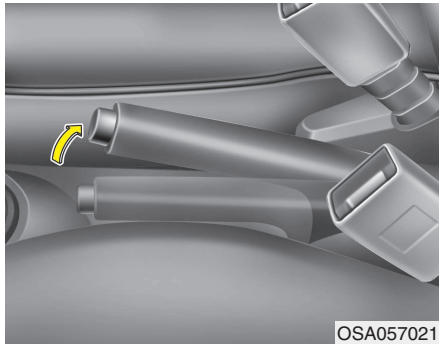

G140100ASA

Checking the parking brake

Check the stroke of the parking brake by counting the number of “clicks” heard while fully applying it from the released position. Also, the parking brake alone should securely hold the vehicle on a fairly steep grade. If the stroke is more or less than specified, have the parking brake adjusted by an authorized KIA dealer.

Stroke : 5~7 “clicks” at a force of 20 kg (44 lbs, 196 N).

FUEL FILTER (FOR DIESEL)

G150100ASA

Draining water from the fuel filter

The fuel filter for diesel engine plays an important role of separating water from fuel and accumulating the water in its bottom.

If water accumulates in the fuel filter, the warning light comes on when the ignition switch is in the ON position. If this warning light illuminates, take your car to an authorized Kia dealer and have the system checked.

⚠ CAUTION

If the water accumulated in the fuel filter is not drained at proper times, damages to the major parts such as the fuel system can be caused by water permeation in the fuel filter.

امداد خودرو فارما
تلفن شبانه روزی: ۰۲۱-۸۸۸۶۲۰۸۵
FarmaSOS.com

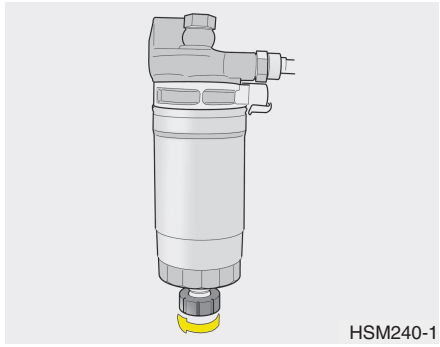

HSM240-1

- Place a water trap under the fuel filter.
- Loosen the drain plug and drain the water.
- After water is drained, securely tighten the drain plug.
- After starting the engine, check to make sure the fuel filter warning light is off.

G150300ASA

Extracting air from the fuel filter

If you drive until you have no fuel left or if you replace the fuel filter, be sure to extract air from the fuel system as it makes it difficult to start the engine.

1. Remove the air vent bolt from the fuel filter.

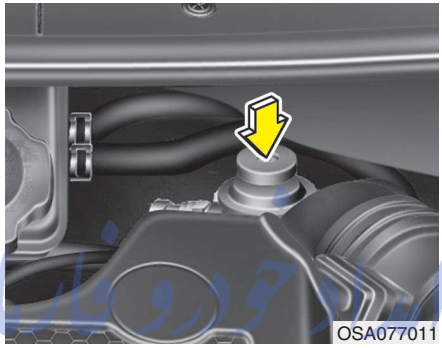
OSA077011

2. Pump up and down until the fuel flows out of the plug opening.

تلفن شبانه روزی: ۰۲۱۰۱۱۸۶۲۰۸۵

✻ NOTICE

- **Use cloths when you extract air so that the fuel is not sprayed around.**
- **Clean the fuel around the fuel filter or the injection pump before starting the engine to prevent fire.**
- **Finally, check each part if the fuel is leaking.**

Farma303.com

G150200AUN

Fuel filter cartridge replacement

✻ NOTICE

When replacing the fuel filter cartridge, use KIA genuine parts.

AIR CLEANER

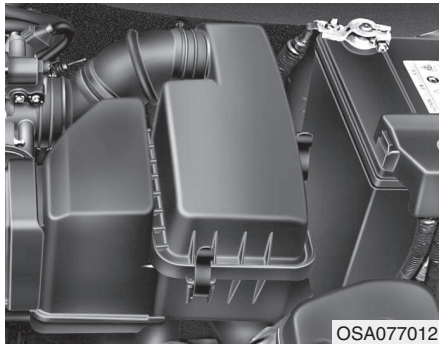
OSA077012

G160100AUN

Filter replacement

It must be replaced when necessary, and should not be cleaned and reused.

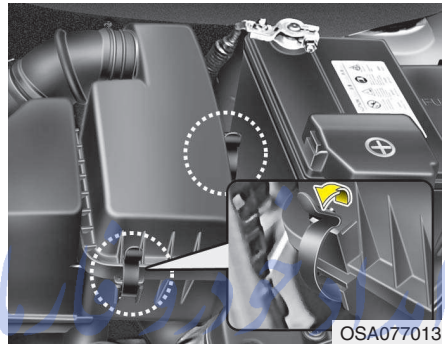
OSA077013

1. Loosen the air cleaner cover attaching clips and open the cover.

تلفن شبانه روزی: ۰۲۱-۸۸۸۶۲۰۸۵

FarmaSOS.com


OSA077014


OSA077015

2. Replace the air cleaner filter.
3. Lock the cover with the cover attaching clips.

Replace the filter according to the Maintenance Schedule.

If the vehicle is operated in extremely dusty or sandy areas, replace the element more often than the usual recommended intervals. (Refer to "Maintenance under severe usage conditions" in this section.)

⚠ CAUTION

- ***Do not drive with the air cleaner removed; this will cause excessive engine wear.***
- ***When removing the air cleaner filter, be careful that dust or dirt does not enter the air intake, or damage may result.***
- ***Use a KIA genuine part. Using non-genuine parts could damage the air flow sensor or turbocharger.***

CLIMATE CONTROL AIR FILTER (IF EQUIPPED)

G170100ASA

Filter inspection

The climate control air filter should be replaced according to the maintenance schedule. If the vehicle is operated in severely air-polluted cities or on dusty rough roads for a long period, it should be inspected more frequently. However, it should be inspected when the air flow volume rapidly drops. When you clean the climate control air filter, clean it by performing the following procedure, and be careful to avoid damaging other components.

تلفن شبانه روزی: ۰۲۱-۸۸۸۶۲۰۸۵
FarmaSOS.com

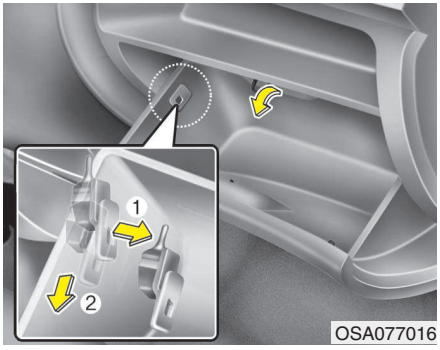

G170200ASA

Filter replacement

1. With the glove box open, remove the stoppers on both sides to allow the glove box to hang freely on the hinges.

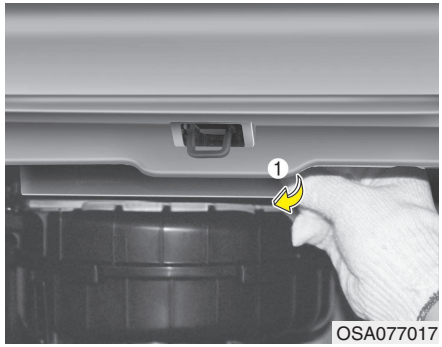

2. Pull out the hooks of the climate control air filter case (1).

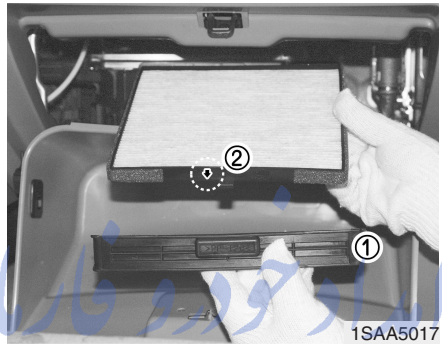

3. Replace the climate control air filter.
4. Reassemble in the reverse order of disassembly.

تلفن شبانه روزی: ۰۲۱-۸۸۸۶۲۰۸۵

✻ NOTICE

When replacing the climate control air filter install it properly. Otherwise, the system may produce noise.

FarnaSOS.com

WIPER BLADES

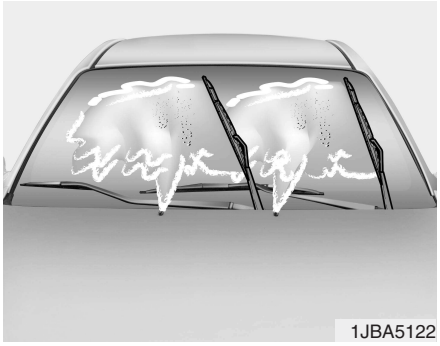

G180100AUN

Blade inspection

✻ NOTICE

Commercial hot waxes applied by automatic car washes have been known to make the windshield difficult to clean.

Contamination of either the windshield or the wiper blades with foreign matter can reduce the effectiveness of the windshield wipers. Common sources of contamination are insects, tree sap, and hot wax treatments used by some commercial car washes. If the blades don't wipe properly, clean both the window and the blades with a good cleaner or mild detergent, and rinse thoroughly with clean water.

⚠ CAUTION

To prevent damage to the wiper blades, do not use gasoline, kerosene, paint thinner, or other solvents on or near them.

G180200AUN

Blade replacement

When the wipers no longer clean adequately, the blades may be worn or cracked, and require replacement.

⚠ CAUTION

To prevent damage to the wiper arms or other components, do not attempt to move the wipers manually.

⚠ CAUTION

The use of a non-specified wiper blade could cause wiper malfunction and failure.

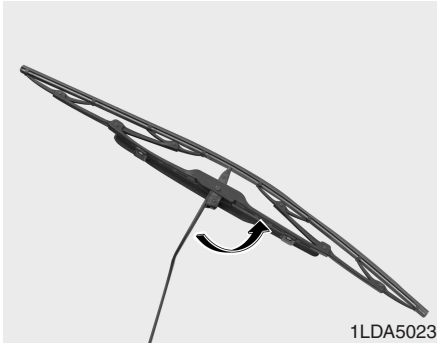

G180201AUN

Front windshield wiper blade

1. Raise the wiper arm and turn the wiper blade assembly to expose the plastic locking clip.

⚠ CAUTION

Do not allow the wiper arm to fall against the windshield, since it may chip or crack the windshield.

FarmaSOS.com

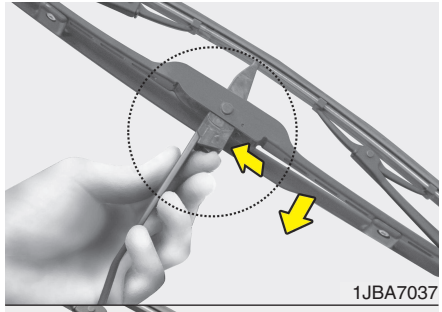

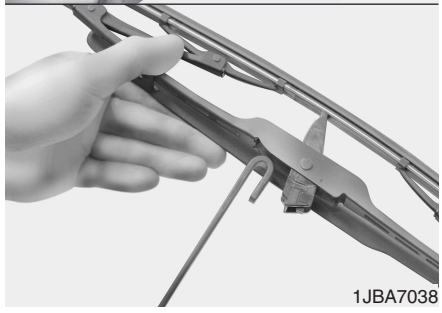

2. Compress the clip and slide the blade assembly downward.
3. Lift it off the arm.
4. Install the blade assembly in the reverse order of removal.

G180202AUN

Rear window wiper blade

To prevent damage to the wiper arms or other components, have an authorized KIA dealer replace the wiper blade.

امداد خودرو فارما
تلفن شبانه روزی: ۰۲۱-۸۸۸۶۲۰۸۵
FarmaSOS.com

BATTERY

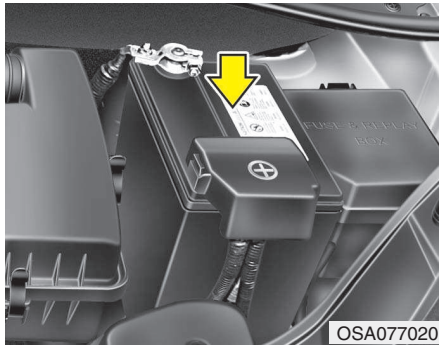

G190100AUN

For best battery service

- Keep the battery securely mounted.
- Keep the battery top clean and dry.
- Keep the terminals and connections clean, tight, and coated with petroleum jelly or terminal grease.
- Rinse any spilled electrolyte from the battery immediately with a solution of water and baking soda.
- If the vehicle is not going to be used for an extended time, disconnect the battery cables.

⚠ WARNING - Battery dangers



Always read the following instructions carefully when handling a battery.



Keep lighted cigarettes and all other flames or sparks away from the battery.



Hydrogen, a highly combustible gas, is always present in battery cells and may explode if ignited.



Keep batteries out of the reach of children because batteries contain highly corrosive SULFURIC ACID. Do not allow battery acid to contact your skin, eyes, clothing or paint finish.

(Continued)

(Continued)



If any electrolyte gets into your eyes, flush your eyes with clean water for at least 15 minutes and get immediate medical attention.

If electrolyte gets on your skin, thoroughly wash the contacted area. If you feel a pain or a burning sensation, get medical attention immediately.



Wear eye protection when charging or working near a battery. Always provide ventilation when working in an enclosed space.

(Continued)

(Continued)



An inappropriately disposed battery can be harmful to the environment and human health. Dispose the battery according to your local law(s) or regulation.

- When lifting a plastic-cased battery, excessive pressure on the case may cause battery acid to leak, resulting in personal injury. Lift with a battery carrier or with your hands on opposite corners.
- Never attempt to recharge the battery when the battery cables are connected.
- The electrical ignition system works with high voltage. Never touch these components with the engine running or the ignition switched on.

Failure to follow the above warnings can result in serious bodily injury or death.

FarmaSOS.com

G190200AUN

Battery recharging

Your vehicle has a maintenance-free, calcium-based battery.

- If the battery becomes discharged in a short time (because, for example, the headlights or interior lights were left on while the vehicle was not in use), recharge it by slow charging (trickle) for 10 hours.
- If the battery gradually discharges because of high electric load while the vehicle is being used, recharge it at 20-30A for two hours.

⚠ WARNING - Recharging battery

When recharging the battery, observe the following precautions:

- **The battery must be removed from the vehicle and placed in an area with good ventilation.**
- **Do not allow cigarettes, sparks, or flame near the battery.**
- **Watch the battery during charging, and stop or reduce the charging rate if the battery cells begin gassing (boiling) violently or if the temperature of the electrolyte of any cell exceeds 49°C (120°F).**
- **Wear eye protection when checking the battery during charging.**
- **Disconnect the battery charger in the following order.**

1. **Turn off the battery charger main switch.**
2. **Unhook the negative clamp from the negative battery terminal.**
3. **Unhook the positive clamp from the positive battery terminal.**

(Continued)

(Continued)

- **Before performing maintenance or recharging the battery, turn off all accessories and stop the engine.**
- **The negative battery cable must be removed first and installed last when the battery is disconnected.**

G190300ASA

Reset items

Items should be reset after the battery has been discharged or the battery has been disconnected.

- Auto down window (See section 4)
- Climate control system (See section 4)
- Clock (See section 4)
- Audio (See section 4)

FamaBOO.com

TIRES AND WHEELS

G200100AUN

Tire care

For proper maintenance, safety, and maximum fuel economy, you must always maintain the recommended tire inflation pressures and stay within the load limits and weight distribution recommended for your vehicle.

G200200AUN

Recommended cold tire inflation pressures

All tire pressures (including the spare) should be checked when the tires are cold. “Cold Tires” means the vehicle has not been driven for at least three hours or driven less than 1.6 km (one mile).

Recommended pressures must be maintained for the best ride, top vehicle handling, and minimum tire wear.

For recommended inflation pressure, refer to “Tire and wheels” in section 8.


OSA087005

All specifications (sizes and pressures) can be found on a label attached to the vehicle.

تلفن شبانه روزی: ۰۲۱-۸۸۸۶۲۰۸۵
FarmaSOS.com

⚠ WARNING - Tire underinflation

Severe underinflation can lead to severe heat build-up, causing blowouts, tread separation and other tire failures that can result in the loss of vehicle control leading to severe injury or death. This risk is much higher on hot days and when driving for long periods at high speed.

⚠ CAUTION

- ***Underinflation also results in excessive wear, poor handling and reduced fuel economy. Wheel deformation also is possible. Keep your tire pressures at proper levels. If a tire frequently needs refilling, have it checked by an authorized KIA dealer.***
- ***Overinflation produces a harsh ride, excessive wear at the center of the tire tread, and greater possibility of damage from road hazards.***

⚠ CAUTION

- ***Warm tires normally exceed recommended cold tire pressures by 28 to 41 kPa (4 to 6 psi). Do not release air from warm tires to adjust the pressure or the tires will be underinflated.***
- ***Be sure to reinstall the tire inflation valve caps. Without the valve cap, dirt or moisture could get into the valve core and cause air leakage. If a valve cap is missing, install a new one as soon as possible.***

⚠ WARNING - Tire Inflation

Overinflation or underinflation can reduce tire life, adversely affect vehicle handling, and lead to sudden tire failure. This could result in loss of vehicle control and potential injury.

⚠ CAUTION - Tire pressure

Always observe the following:

- ***Check tire pressure when the tires are cold. (After vehicle has been parked for at least three hours or hasn't been driven more than 1.6 km (one mile) since startup.)***
- ***Check the pressure of your spare tire each time you check the pressure of other tires.***
- ***Never overload your vehicle. Be careful not to overload a vehicle luggage rack if your vehicle is equipped with one.***
- ***Worn, old tires can cause accidents. If your tread is badly worn, or if your tires have been damaged, replace them.***

FarmaSOS.com

G200300AUN

Checking tire inflation pressure

Check your tires once a month or more.

Also, check the tire pressure of the spare tire.

G200301AUN

How to check

Use a good quality gage to check tire pressure. You can not tell if your tires are properly inflated simply by looking at them. Radial tires may look properly inflated even when they're underinflated.

Check the tire's inflation pressure when the tires are cold. - "Cold" means your vehicle has been sitting for at least three hours or driven no more than 1.6 km (1 mile).

Remove the valve cap from the tire valve stem. Press the tire gage firmly onto the valve to get a pressure measurement. If the cold tire inflation pressure matches the recommended pressure on the tire and loading information label, no further adjustment is necessary. If the pressure is low, add air until you reach the recommended amount.

If you overfill the tire, release air by pushing on the metal stem in the center of the tire valve. Recheck the tire pressure with the tire gage. Be sure to put the valve caps back on the valve stems. They help prevent leaks by keeping out dirt and moisture.

⚠ WARNING

- **Inspect your tires frequently for proper inflation as well as wear and damage. Always use a tire pressure gauge.**
- **Tires with too much or too little pressure wear unevenly causing poor handling, loss of vehicle control, and sudden tire failure leading to accidents, injuries, and even death. The recommended cold tire pressure for your vehicle can be found in this manual and on the tire label located on the driver's side center pillar.**
- **Worn tires can cause accidents. Replace tires that are worn, show uneven wear, or are damaged.**
- **Remember to check the pressure of your spare tire. KIA recommends that you check the spare every time you check the pressure of the other tires on your vehicle.**

G200400AUN

Tire rotation

To equalize tread wear, it is recommended that the tires be rotated every 12,000 km (7,500 miles) or sooner if irregular wear develops.

During rotation, check the tires for correct balance.

When rotating tires, check for uneven wear and damage. Abnormal wear is usually caused by incorrect tire pressure, improper wheel alignment, out-of-balance wheels, severe braking or severe cornering. Look for bumps or bulges in the tread or side of the tire. Replace the tire if you find either of these conditions. Replace the tire if fabric or cord is visible. After rotation, be sure to bring the front and rear tire pressures to specification and check lug nut tightness.

Refer to “Tire and wheels” in section 8.

With a full-size spare tire

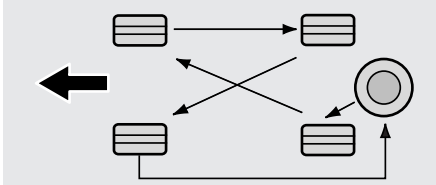

CBGQ0706

Without a spare tire

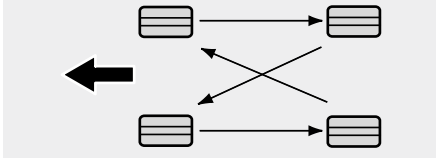

S2BLA790A

Directional tires (if equipped)

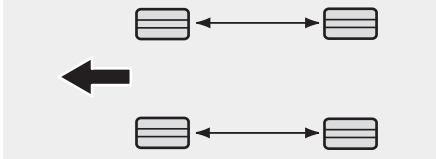

CBGQ0707A

Disc brake pads should be inspected for wear whenever tires are rotated.

✻ NOTICE

Rotate radial tires that have an asymmetric tread pattern only from front to rear and not from right to left.

⚠ WARNING

- **Do not use the compact spare tire for tire rotation.**
- **Do not mix bias ply and radial ply tires under any circumstances. This may cause unusual handling characteristics that could cause death, severe injury, or property damage.**

G200500AUN

Wheel alignment and tire balance

The wheels on your vehicle were aligned and balanced carefully at the factory to give you the longest tire life and best overall performance.

In most cases, you will not need to have your wheels aligned again. However, if you notice unusual tire wear or your vehicle pulling one way or the other, the alignment may need to be reset.

If you notice your vehicle vibrating when driving on a smooth road, your wheels may need to be rebalanced.

⚠ CAUTION

Improper wheel weights can damage your vehicle's aluminum wheels. Use only approved wheel weights.

FarmaSOS.com

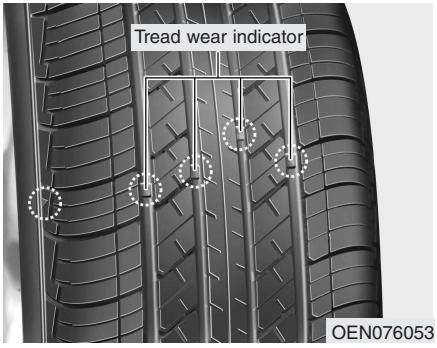

G200600AUN

Tire replacement

If the tire is worn evenly, a tread wear indicator will appear as a solid band across the tread. This shows there is less than 1.6 mm (1/16 inch) of tread left on the tire. Replace the tire when this happens.

Do not wait for the band to appear across the entire tread before replacing the tire.

⚠ WARNING - Replacing tires

To reduce the chance of serious or fatal injuries from an accident caused by tire failure or loss of vehicle control:

- **Replace tires that are worn, show uneven wear, or are damaged. Worn tires can cause loss of braking effectiveness, steering control, and traction.**
- **Do not drive your vehicle with too little or too much pressure in your tires. This can lead to uneven wear and tire failure.**
- **When replacing tires, never mix radial and bias-ply tires on the same car. You must replace all tires (including the spare) if moving from radial to bias-ply tires.**

(Continued)

(Continued)

- **Using tires and wheel other than the recommended sizes could cause unusual handling characteristics and poor vehicle control, resulting in a serious accident.**
- **Wheels that do not meet KIA's specifications may fit poorly and cause in damage to the vehicle or unusual handling and poor vehicle control.**
- **The ABS works by comparing the speed of the wheels. Tire size can affect wheel speed.**

  When replacing tires, all 4 tires must use the same size originally supplied with the vehicle. Using tires of a different size can cause the ABS (Anti-lock Brake System) and ESP (Electronic Stability Program) to work irregularly. (if equipped)

G200601AUN

Compact spare tire replacement (if equipped)

A compact spare tire has a shorter tread life than a regular size tire. Replace it when you can see the tread wear indicator bars on the tire. The replacement compact spare tire should be the same size and design tire as the one provided with your new vehicle and should be mounted on the same compact spare tire wheel. The compact spare tire is not designed to be mounted on a regular size wheel, and the compact spare tire wheel is not designed for mounting a regular size tire.

G200700BUN

Wheel replacement

When replacing the metal wheels for any reason, make sure the new wheels are equivalent to the original factory units in diameter, rim width and offset.

⚠ WARNING

A wheel that is not the correct size may adversely affect wheel and bearing life, braking and stopping abilities, handling characteristics, ground clearance, body-to-tire clearance, snow chain clearance, speedometer and odometer calibration, headlight aim and bumper height.

G200800AUN

Tire traction

Tire traction can be reduced if you drive on worn tires, tires that are improperly inflated or on slippery road surfaces. Tires should be replaced when tread wear indicators appear. To reduce the possibility of losing control, slow down whenever there is rain, snow or ice on the road.

G200900ASA

Tire maintenance

In addition to proper inflation, correct wheel alignment helps decrease tire wear. If you find a tire worn unevenly, have your dealer check the wheel alignment.

When you have new tires installed, make sure they are balanced. This will increase vehicle ride comfort and tire life. Additionally, a tire should always be rebalanced if it is removed from the wheel.

FarmaSOS.com

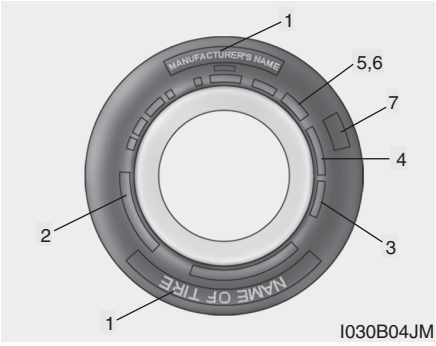

G201000AUN

Tire sidewall labeling

This information identifies and describes the fundamental characteristics of the tire and also provides the tire identification number (TIN) for safety standard certification. The TIN can be used to identify the tire in case of a recall.

G201001AUN

1. Manufacturer or brand name

Manufacturer or Brand name is shown.

G201002ASA

2. Tire size designation

A tire's sidewall is marked with a tire size designation. You will need this information when selecting replacement tires for your car. The following explains what the letters and numbers in the tire size designation mean.

Example tire size designation:

155/70 R13 75T

(These numbers are provided as an example only; your tire size designator could vary depending on your vehicle.)

155 - Tire width in millimeters.

70 - Aspect ratio. The tire's section height as a percentage of its width.

R - Tire construction code (Radial).

13 - Rim diameter in inches.

75 - Load Index, a numerical code associated with the maximum load the tire can carry.

T - Speed Rating Symbol. See the speed rating chart in this section for additional information.

Wheel size designation

Wheels are also marked with important information that you need if you ever have to replace one. The following explains what the letters and numbers in the wheel size designation mean.

Example wheel size designation:

4.0 B x 13

4.0 - Rim width in inches.

B - Rim contour designation.

13 - Rim diameter in inches.

امداد خودرو فارما
تلفن شبانه روزی: ۰۲۱۸۸۸۶۲۰۸۵
FarmaSOS.com

Tire speed ratings

The chart below lists many of the different speed ratings currently being used for passenger car tires. The speed rating is part of the tire size designation on the sidewall of the tire. This symbol corresponds to that tire's designed maximum safe operating speed.

Speed Rating Symbol	Maximum Speed
S	180 km/h (112 mph)
T	190 km/h (118 mph)
H	210 km/h (130 mph)
V	240 km/h (149 mph)
Z	Above 240 km/h (149 mph)

G201003APA

3. Checking tire life (TIN : Tire Identification Number)

Any tires that are over 6 years old, based on the manufacturing date, (including the spare tire) should be replaced by new ones. You can find the manufacturing date on the tire sidewall (possibly on the inside of the wheel), displaying the DOT Code. The DOT Code is a series of numbers on a tire consisting of numbers and English letters. The manufacturing date is designated by the last four digits (characters) of the DOT code.

DOT : XXXX XXXX OOOO

The front part of the DOT means a plant code number, tire size and tread pattern and the last four numbers indicate week and year manufactured.

For example:

DOT XXXX XXXX 1609 represents that the tire was produced in the 16th week of 2009.

⚠ WARNING - Tire age

Tires degrade over time, even when they are not being used.

Regardless of the remaining tread, it is recommended that tires generally be replaced after six (6) years of normal service. Heat caused by hot climates or frequent high loading conditions can accelerate the aging process. Failure to follow this warning could cause sudden tire failure, which could lead to a loss of control and an accident involving serious injury or death.

G201004AEN

4. Tire ply composition and material

The number of layers or plies of rubber-coated fabric in the tire. Tire manufacturers also must indicate the materials in the tire, which include steel, nylon, polyester, and others. The letter "R" means radial ply construction; the letter "D" means diagonal or bias ply construction; and the letter "B" means belted-bias ply construction.

تلفن شبانه روزی ۰۲۱-۸۸۴۶۲۰۸۵

G201005AUN

5. Maximum permissible inflation pressure

This number is the greatest amount of air pressure that should be put in the tire. Do not exceed the maximum permissible inflation pressure. Refer to the Tire and Loading Information label for recommended inflation pressure.

G201006AUN

6. Maximum load rating

This number indicates the maximum load in kilograms and pounds that can be carried by the tire. When replacing the tires on the vehicle, always use a tire that has the same load rating as the factory installed tire.

G2010007AEN

7. Uniform tire quality grading

Quality grades can be found where applicable on the tire sidewall between tread shoulder and maximum section width.

For example: TREAD wear 200

TRACTION AA

TEMPERATUE A

Tread wear

The tread wear grade is a comparative rating based on the wear rate of the tire when tested under controlled conditions on a specified government test course. For example, a tire graded 150 would wear one-and-a-half times (1½) as well on the government course as a tire graded 100.

The relative performance of tires depends upon the actual conditions of their use, however, and may depart significantly from the norm due to variations in driving habits, service practices and differences in road characteristics and climate.

These grades are molded on the side-walls of passenger vehicle tires. The tires available as standard or optional equipment on your vehicle may vary with respect to grade.

Traction - AA, A, B & C

The traction grades, from highest to lowest, are AA, A, B and C. Those grades represent the tire's ability to stop on wet pavement measured under controlled conditions on specified government test surfaces of asphalt and concrete. A tire marked C may have poor traction performance.

⚠ WARNING

The traction grade assigned to this tire is based on straight-ahead braking traction tests, and does not include acceleration, cornering, hydroplaning, or peak traction characteristics.

FarmaSOS.com

Temperature -A, B & C

The temperature grades are A (the highest), B, and C, representing the tire's resistance to the generation of heat and its ability to dissipate heat when tested under controlled conditions on a specified indoor laboratory test wheel.

Sustained high temperature can cause the material of the tire to degenerate and reduce tire life, and excessive temperature can lead to sudden tire failure. Grades B and A represent higher levels of performance on the laboratory test wheel than the minimum required by law.

⚠ WARNING - Tire temperature

The temperature grade for this tire is established for a tire that is properly inflated and not overloaded. Excessive speed, underinflation, or excessive loading, either separately or in combination, can cause heat build-up and sudden tire failure. This can cause loss of vehicle control and serious injury or death.

تلفن شبانه روزی: ۰۲۱-۸۸۸۶۲۰۸۵
FarmaSOS.com

FUSES

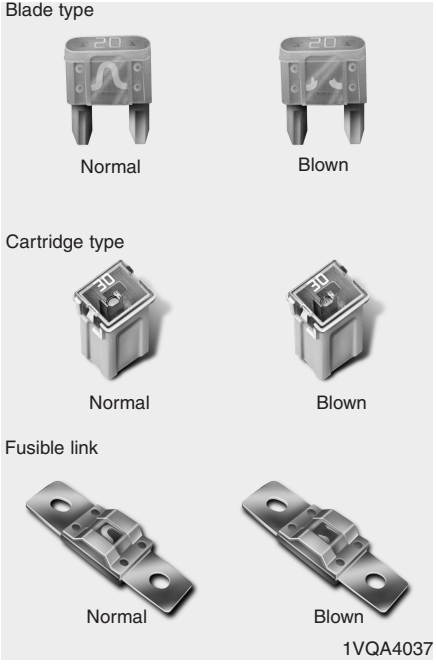

G210000AUN

A vehicle's electrical system is protected from electrical overload damage by fuses.

This vehicle has 2 (or 3) fuse panels, one located in the driver's side panel bolster, the other(s) in the engine compartment.

If any of your vehicle's lights, accessories, or controls do not work, check the appropriate circuit fuse. If a fuse has blown, the element inside the fuse will be melted.

If the electrical system does not work, first check the driver's side fuse panel.

Always replace a blown fuse with one of the same rating.

If the replacement fuse blows, this indicates an electrical problem. Avoid using the system involved and immediately consult an authorized KIA dealer.

Three kinds of fuses are used: blade type for lower amperage rating, cartridge type, and fusible link for higher amperage ratings.

FarmaSOS.com

⚠ WARNING - Fuse replacement

- **Never replace a fuse with anything but another fuse of the same rating.**
- **A higher capacity fuse could cause damage and possibly a fire.**
- **Never install a wire instead of the proper fuse - even as a temporary repair. It may cause extensive wiring damage and a possible fire.**

⚠ CAUTION

Do not use a screwdriver or any other metal object to remove fuses because it may cause a short circuit and damage the system.


OSA077019

G210100ASA

Instrument panel fuse replacement

1. Turn the ignition switch and all other switches off.
2. Open the fuse panel cover.

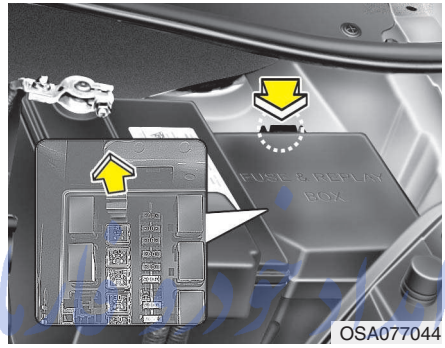
OSA077044

3. Pull the suspected fuse straight out. Use the removal tool provided in the engine compartment fuse panel.
4. Check the removed fuse; replace it if it is blown.

   Spare fuses are provided in the instrument panel fuse panel (or in the engine compartment fuse panel).
5. Push in a new fuse of the same rating, and make sure it fits tightly in the clips.

If it fits loosely, consult an authorized KIA dealer.

If you do not have a spare, use a fuse of the same rating from a circuit you may not need for operating the vehicle, such as the cigarette lighter fuse.

If the headlights or other electrical components do not work and the fuses are OK, check the fuse panel in the engine compartment. If a fuse is blown, it must be replaced.

FarmasDis.com

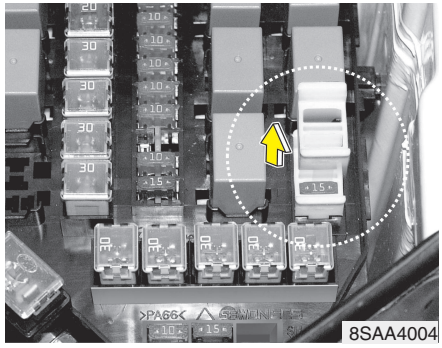

G210101ASA

Memory fuse

Your vehicle is equipped with a memory fuse to prevent battery discharge when your vehicle is parked without being operated for prolonged periods. Use the following procedures before parking the vehicle for prolonged periods.

1. Turn off the engine.
2. Turn off the headlights and tail lights.
3. Open the engine compartment fuse box cover and pull up the “ROOM LAMP 10A/AUDIO 15A”.

✻ NOTICE

- **If the memory fuse is pulled up from the fuse panel, the warning chime, audio, clock and interior lamps, etc., will not operate. Some items must be reset after replacement. Refer to “Battery” in this section.**
- **Even though the memory fuse is pulled up, the battery can still be discharged by operation of the headlights or other electrical devices.**

امداد خودرو فارما
تلفن شبانه روزی: ۰۲۱-۸۸۸۶۲۰۸۵
FarmaSOS.com

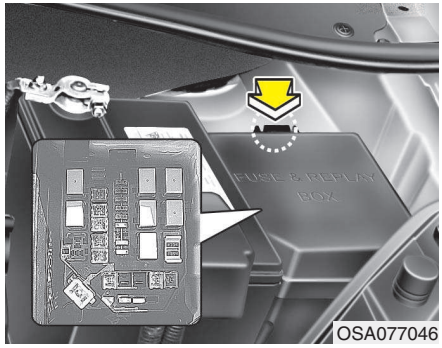

G210200AUN

Engine compartment fuse replacement

1. Turn the ignition switch and all other switches off.
2. Remove the fuse panel cover by pressing the tab and pulling up.

3. Check the removed fuse; replace it if it is blown. To remove or insert the fuse, use the fuse puller in the engine compartment fuse panel.
4. Push in a new fuse of the same rating, and make sure it fits tightly in the clips. If it fits loosely, consult an authorized KIA dealer.

⚠ CAUTION

After checking the fuse panel in the engine compartment, securely install the fuse panel cover. If not, electrical failures may occur from water contact.

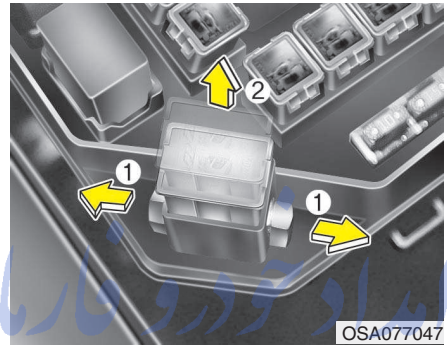

G210201ASA

Main fuse

If the BATT fuse is blown, it must be removed as follows:

1. Disconnect the negative battery cable.
2. Remove the bolt shown in the picture above.
3. Replace the fuse with a new one of the same rating.
4. Reinstall in the reverse order of removal.

✻ NOTICE

If the main fuse is blown, consult an authorized KIA dealer.

ایران خودرو فارما
تلفن شبانه روزی: ۸۵
FarmaSOS.com

G210300ASA

Fuse/relay panel description

Inside the fuse/relay panel covers, you can find the fuse/relay label describing fuse/relay name and capacity.

Instrument panel fuse panel

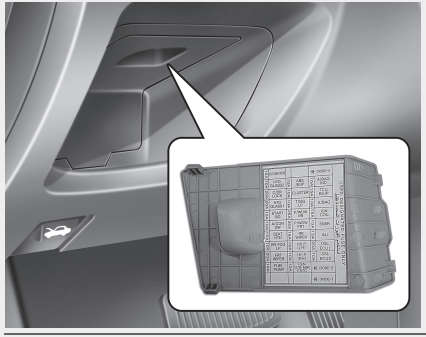

Engine compartment main fuse panel

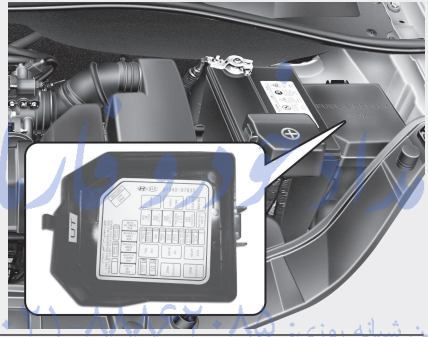

Engine compartment sub fuse panel (Gasoline only)

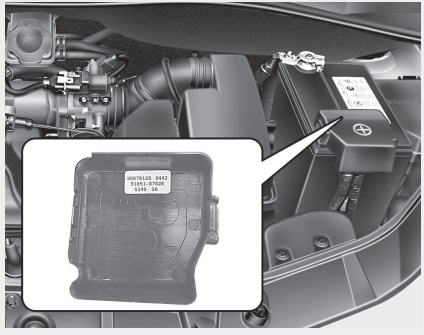

Engine compartment sub fuse panel (Diesel only)

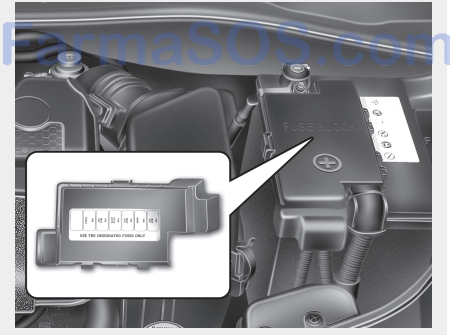

OSA077040/OSA077041/OSA077042/OSA077061

✻ NOTICE

Not all fuse panel descriptions in this manual may be applicable to your vehicle. It is accurate at the time of printing. When you inspect the fuse panel in your vehicle, refer to the fuse panel label.

ParmaSOS.com

Instrument panel fuse panel

Description	Fuse rating	Protected component
START SIG	10A	Start motor
RR FOG LP	10A	Rear fog light
A/CON SW	10A	Air conditioner
CLUSTER	10A	Cluster
SEAT HTD	15A	Seat warmer
C/LIGHTER	15A	Cigar lighter
A/BAG	10A	Airbag
RR WIPER	15A	Rear wiper
ABS/ESP	10A	Anti-lock brake system/ Electronic Stability program
IGN COIL	15A	Ignition
T/SIG LP	10A	Turn signal light
HTD GLASS1	20A	Rear window defroster
HTD GLASS2	10A	Rear window defroster
P/WDW RR	25A	Power window (rear)
IGN O/S MIR FATC	10A	Outside rearview mirror
P/WDW FRT	25A	Power window (front)
FRT WIPER	20A	Front wiper
H/LP (LH)	10A	Headlight (left)
H/LP (RH)	10A	Headlight (right)
FUEL PUMP	10A	Fuel pump
INJ	15A	Injection
SNSR	10A	O_2 Sensor

Description	Fuse rating	Protected component
C/DR LOCK	20A	Central door lock
A/BAG IND	10A	Airbag warning
TCU B/UP	15A	Automatic tranaxle
DSL ECU1	20A	-
DSL ECU2	10A	-

امداد خودرو فارما
تلفن شبانه روزی: ۰۸۵-۶۲۸۸۶۲۰۸۵
FarmaSOS.com

Engine compartment main fuse panel

Description	Fuse rating	Protected component
ECU1	20A (30A)	Engine control unit
STOP	10A	Stop light
FR/FOG	10A	Front fog light
A/CON	10A	Air conditioner
HORN	10A	Horn
ECU2	10A	Engine control unit
SPARE	10A	spare fuse
SPARE	15A	spare fuse
ABS2	40A	Anti-lock brake system
ABS1	40A	Anti-lock brake system
B+	30A	In panel B+
BLOWER	30A	Blower
IGN1	30A	Ignition
IGN2	30A	Ignition
TAIL LH	10A	Tail light (left)
TAIL RH	10A	Tail light (right)
DRL	10A	Daytime running light
HAZARD	15A	Hazard warning flasher
R/LP	10A	Room lamp
AUDIO	15A	Audio
P/WDW	30A	Power window

Description	Fuse rating	Protected component
RAD	30A	Radiator fan
BATT	100A (120A)	Alternator, Battery
FR FOG	-	Front fog light relay
A/CON	-	Air conditioner relay
HORN	-	Horn relay
START	-	Start motor relay
RAD1	-	Radiator fan relay
RAD2	-	Radiator fan relay
RR FOG	-	Rear fog light relay
TAIL	-	Tail light relay

Engine compartment sub fuse panel (Gasoline engine)

Description	Fuse rating	Protected component
MDPS	80A	Motor driven power steering

Engine compartment sub fuse panel (Diesel engine)

Description	Fuse rating	Protected component
FFHTS	30A	Fuel filter heater temporary sensor
GLOW PLUG	80A	Glow plug
MDPS	80A	Motor driven power steering
PTC HTR1	40A	PTC heater1
PTC HTR2	40A	PTC heater2
PTC HTR3	40A	PTC heater3

امداد خودرو فارما
۰۲۱-۸۸۸۶۲۰۸۵ تلفن
FarmaSOS.com

LIGHT BULBS

G220000AUN

⚠ WARNING - Working on the lights

Prior to working on the light, firmly apply the parking brake, ensure that the ignition switch is turned to the LOCK position and turn off the lights to avoid sudden movement of the vehicle and burning your fingers or receiving an electric shock.

Use only the bulbs of the specified wattage.

⚠ CAUTION

Be sure to replace the burned-out bulb with one of the same wattage rating. Otherwise, it may cause damage to the fuse or electric wiring system.

⚠ CAUTION

If you don't have necessary tools, the correct bulbs and the expertise, consult an authorized KIA dealer. In many cases, it is difficult to replace vehicle light bulbs because other parts of the vehicle must be removed before you can get to the bulb. This is especially true if you have to remove the headlight assembly to get to the bulb(s). Removing/installing the headlight assembly can cause damage to the vehicle.

تلفن شبانه روزی: ۰۲۱-۸۸۸۶۲۰۸۵
PartsSOS.com

✻ NOTICE

After heavy rain or washing, headlight and taillight lenses could appear frosty. This condition is caused by the temperature difference between the lamp inside and outside. This is similar to the condensation on your windows inside your vehicle during rain and doesn't indicate a problem with your vehicle. If the water leaks into the lamp bulb circuitry, have the vehicle checked by an authorized KIA dealer.



G220100ASA

Headlight, position light, turn signal light, front fog light bulb replacement

(1) Headlight (High/Low) / Position light
(2) Front turn signal light
(3) Front fog light (if equipped)

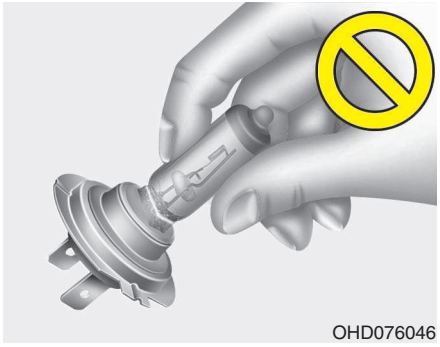
OHD076046

G220101ASA

Headlight bulb

⚠ WARNING - Halogen bulbs

- **Halogen bulbs contain pressurized gas that will produce flying pieces of glass if broken.**
- **Always handle them carefully, and avoid scratches and abrasions. If the bulbs are lit, avoid contact with liquids. Never touch the glass with bare hands. Residual oil may cause the bulb to overheat and burst when lit. A bulb should be operated only when installed in a headlight.**

(Continued)

(Continued)

- **If a bulb becomes damaged or cracked, replace it immediately and carefully dispose of it.**
- **Wear eye protection when changing a bulb. Allow the bulb to cool down before handling it.**

امداد خودرو فارما
تلفن شبانه روزی: ۰۲۱-۸۸۸۶۲۰۸۵
FarmaSOS.com

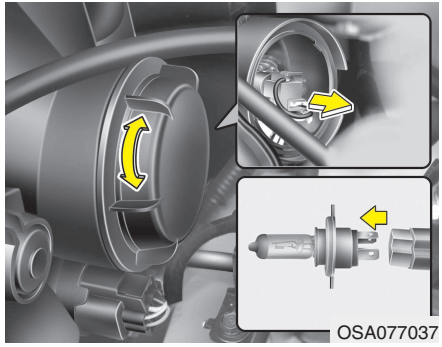
OSA077037

1. Open the hood.
2. Remove the headlight bulb cover by turning it counterclockwise.
3. Disconnect the headlight bulb socket-connector.
4. Unsnap the headlight bulb retaining wire by depressing the end and pushing it upward.
5. Remove the bulb from the headlight assembly.
6. Install a new headlight bulb and snap the headlight bulb retaining wire into position by aligning the wire with the groove on the bulb.
7. Connect the headlight bulb socket-connector.
8. Install the headlight bulb cover by turning it clockwise.

G220102AUN

Front turn signal, position and fog light bulbs (if equipped)

If the light bulb does not operate, have the vehicle checked by an authorized KIA dealer.

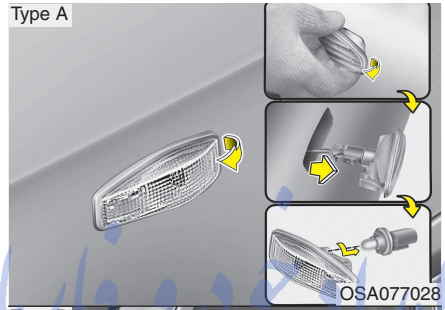



FarmaSOS.com

G220200ASA

Side repeater light bulb replacement (if equipped)

Type A

1. Remove the light assembly from the body of the vehicle by prying the lens and pulling the assembly out.
2. Disconnect the bulb electrical connector.
3. Separate the socket and the lens part by turning the socket counterclockwise until the tabs on the socket align with the slots on the lens part.
4. Remove the bulb by pulling it straight out.
5. Insert a new bulb in the socket.
6. Reassemble the socket and the lens part.
7. Connect the bulb electrical connector.
8. Reinstall the light assembly to the body of the vehicle.

Type B

If the light bulb does not operate, have the vehicle checked by an authorized KIA dealer.



G220300ASA

Rear combination light bulb replacement

(1) Stop and tail light
(2) Rear turn signal light
(3) Back-up light / Rear fog light (if equipped)

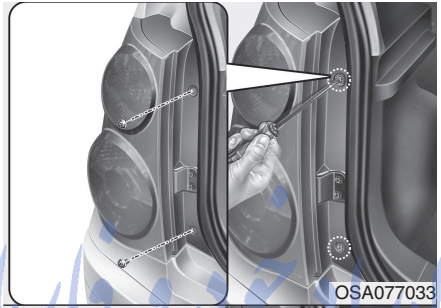

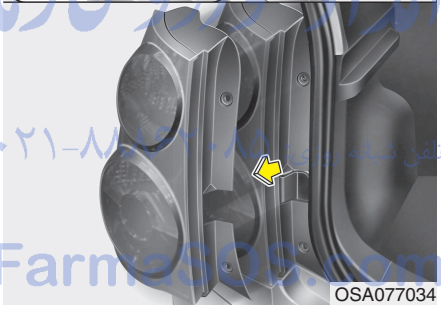

1. Open the tailgate.
2. Remove the rear combination light assembly by turning the screw counterclockwise and removing the assembly.
3. Remove the socket from the assembly by turning the socket counterclockwise until the tabs on the socket align with the slots on the assembly.

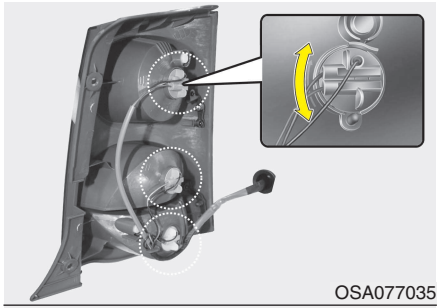

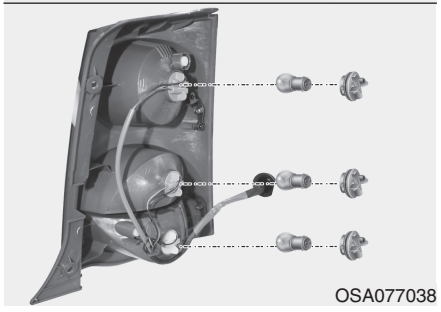

4. Remove the bulb from the socket by pressing it in and rotating it until the tabs on the bulb align with the slots in the socket. Pull the bulb out of the socket.
5. Insert a new bulb by inserting it into the socket and rotating it until it locks into place.

FarmaSOS.com

6. Install the socket in the assembly by aligning the tabs on the socket with the slots in the assembly. Push the socket into the assembly and turn the socket clockwise.
7. Replace the service cover and tighten the screws.



G220400AUN

High mounted stop light replacement (if equipped)

If the light does not operate, have the vehicle checked by an authorized KIA dealer.

FarmaSOS.com

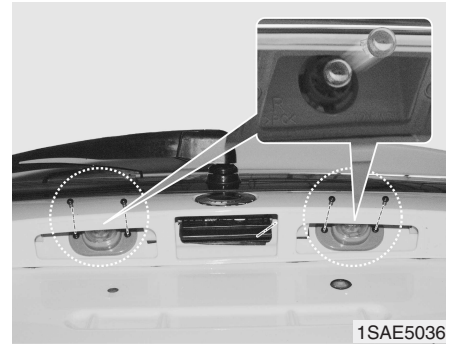

G220500ASA

License plate light bulb replacement

1. Loosen the light assembly retaining screws with a cross-tip screwdriver.
2. Disconnect the bulb electrical connector.
3. Separate the socket and the lens parts by turning the socket counterclockwise until the tabs on the socket align with the slots on the lens part.
4. Remove the bulb by pulling it straight out.
5. Insert a new bulb in the socket.
6. Reassemble the socket and the lens part.
7. Connect the bulb electrical connector.
8. Reinstall the light assembly securely with the retaining screws.

Dome light

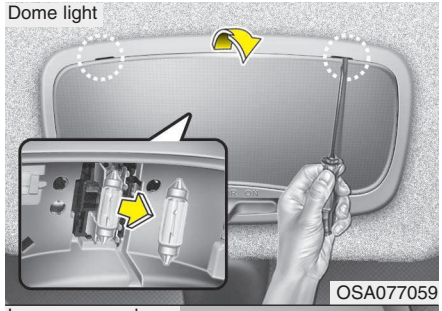

OSA077059

Luggage room lamp

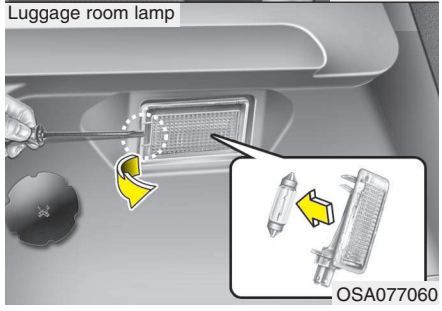

OSA077060

G220600ASA

Interior light bulb replacement

1. Using a flat-blade screwdriver, gently pry the lens from the interior light housing.
2. Remove the bulb by pulling it straight out.

⚠ WARNING

Prior to working on the Interior Lights, ensure that the "OFF" button is depressed to avoid burning your fingers or receiving an electric shock.

3. Install a new bulb in the socket.
4. Align the lens tabs with the interior light housing notches and snap the lens into place.

⚠ CAUTION

Be careful not to dirty or damage lens, the lens tab, and plastic housings.

FarmaSOS.com

APPEARANCE CARE

Exterior care

G230101AUN

Exterior general caution

It is very important to follow the label directions when using any chemical cleaner or polish. Read all warning and caution statements that appear on the label.

G230102BUN

Finish maintenance

Washing

To help protect your vehicle's finish from rust and deterioration, wash it thoroughly and frequently at least once a month with lukewarm or cold water.

If you use your vehicle for off-road driving, you should wash it after each off-road trip. Pay special attention to the removal of any accumulation of salt, dirt, mud, and other foreign materials. Make sure the drain holes in the lower edges of the doors and rocker panels are kept clear and clean.

Insects, tar, tree sap, bird droppings, industrial pollution and similar deposits can damage your vehicle's finish if not removed immediately.

Even prompt washing with plain water may not completely remove all these deposits. A mild soap, safe for use on painted surfaces, may be used.

After washing, rinse the vehicle thoroughly with lukewarm or cold water. Do not allow soap to dry on the finish.

⚠ CAUTION

- ***Do not use strong soap, chemical detergents or hot water, and do not wash the vehicle in direct sunlight or when the body of the vehicle is warm.***
- ***Be careful when washing the side windows of your vehicle. Especially, with high-pressure water, water may leak through the windows and wet the interior.***
- ***To prevent damage to the plastic parts, do not clean with chemical solvents or strong detergents.***

⚠ WARNING - Wet brakes

After washing the vehicle, test the brakes while driving slowly to see if they have been affected by water. If braking performance is impaired, dry the brakes by applying them lightly while maintaining a slow forward speed.

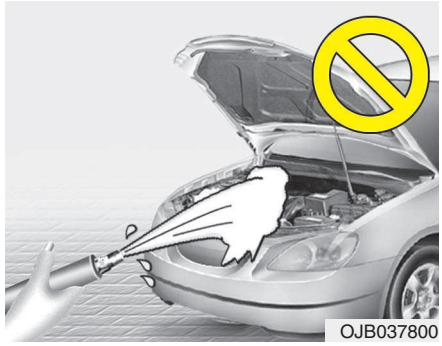

OJB037800

⚠ CAUTION

- ***Water washing in the engine compartment including high pressure water washing may cause the failure of electrical circuits located in the engine compartment.***
- ***Never allow water or other liquids to come in contact with electrical/electronic components inside the vehicle as this may damage them.***

Waxing

Wax the vehicle when water will no longer bead on the paint.

Always wash and dry the vehicle before waxing. Use a good quality liquid or paste wax, and follow the manufacturer's instructions. Wax all metal trim to protect it and to maintain its luster.

Removing oil, tar, and similar materials with a spot remover will usually strip the wax from the finish. Be sure to re-wax these areas even if the rest of the vehicle does not yet need waxing.

⚠ CAUTION

- ***Wiping dust or dirt off the body with a dry cloth will scratch the finish.***
- ***Do not use steel wool, abrasive cleaners, or strong detergents containing highly alkaline or caustic agents on chrome-plated or anodized aluminum parts. This may cause damage to the protective coating and cause discoloration or paint deterioration.***

G230103AUN

Finish damage repair

Deep scratches or stone chips in the painted surface must be repaired promptly. Exposed metal will quickly rust and may develop into a major repair expense.

✻ NOTICE

If your vehicle is damaged and requires any metal repair or replacement, be sure the body shop applies anti-corrosion materials to the parts repaired or replaced.

تلفن شبانه روزی: ۰۲۱-۸۸۸۶۲۰۸۵

FarmaSOS.com

G230104AUN

Bright-metal maintenance

- To remove road tar and insects, use a tar remover, not a scraper or other sharp object.
- To protect the surfaces of bright-metal parts from corrosion, apply a coating of wax or chrome preservative and rub to a high luster.
- During winter weather or in coastal areas, cover the bright metal parts with a heavier coating of wax or preservative. If necessary, coat the parts with non-corrosive petroleum jelly or other protective compound.

G230105ASA

Underbody maintenance

Corrosive materials used for ice and snow removal and dust control may collect on the underbody. If these materials are not removed, accelerated rusting can occur on the underbody parts such as the fuel lines, frame, floor pan and exhaust system, even though they have been treated with rust protection.

Thoroughly flush the vehicle underbody and wheel openings with lukewarm or cold water once a month, after off-road driving and at the end of each winter. Pay special attention to these areas because it is difficult to see all the mud and dirt. It will do more harm than good to wet down the road grime without removing it. The lower edges of the doors, rocker panels, and frame members have drain holes that should not be allowed to clog with dirt; trapped water in these areas can cause rusting.

⚠ WARNING

After washing the vehicle, test the brakes while driving slowly to see if they have been affected by water. If braking performance is impaired, dry the brakes by applying them lightly while maintaining a slow forward speed.

امداد خودرو فارما
تلفن شبانه روزی: ۰۲۱-۸۸۸۶۲۰۸۵
FarmaSOS.com

G230106AUN

Aluminum wheel maintenance

The aluminum wheels are coated with a clear protective finish.

- Do not use any abrasive cleaner, polishing compound, solvent, or wire brushes on aluminum wheels. They may scratch or damage the finish.
- Use only a mild soap or neutral detergent, and rinse thoroughly with water. Also, be sure to clean the wheels after driving on salted roads. This helps prevent corrosion.
- Avoid washing the wheels with high-speed car wash brushes.
- Do not use any acid detergent. It may damage and corrode the aluminum wheels coated with a clear protective finish.

G230107ASA

Corrosion protection

Protecting your vehicle from corrosion

By using the most advanced design and construction practices to combat corrosion, we produce cars of the highest quality. However, this is only part of the job. To achieve the long-term corrosion resistance your vehicle can deliver, the owner's cooperation and assistance is also required.

Common causes of corrosion

The most common causes of corrosion on your car are:

- Road salt, dirt and moisture that is allowed to accumulate underneath the car.
- Removal of paint or protective coatings by stones, gravel, abrasion or minor scrapes and dents which leave unprotected metal exposed to corrosion.

High-corrosion areas

If you live in an area where your car is regularly exposed to corrosive materials, corrosion protection is particularly important. Some of the common causes of accelerated corrosion are road salts, dust control chemicals, ocean air and industrial pollution.

امداد خودرو فارما
تلفن شبانه روزی: ۰۲۱-۸۸۸۶۲۰۸۵
FarmaSOS.com

Moisture breeds corrosion

Moisture creates the conditions in which corrosion is most likely to occur. For example, corrosion is accelerated by high humidity, particularly when temperatures are just above freezing. In such conditions, the corrosive material is kept in contact with the car's surface by moisture that evaporates slowly.

Mud is particularly corrosive because it dries slowly and holds moisture in contact with the vehicle. Although the mud appears to be dry, it can still retain moisture and promote corrosion.

High temperatures can also accelerate corrosion of parts that are not properly ventilated so the moisture can be dispersed. For all these reasons, it is particularly important to keep your car clean and free of mud or accumulations of other materials. This applies not only to the visible surfaces but particularly to the underside of the car.

To help prevent corrosion

You can help prevent corrosion from getting started by observing the following:

Keep your car clean

The best way to prevent corrosion is to keep your car clean and free of corrosive materials. Attention to the underside of the car is particularly important.

- If you live in a high-corrosion area — where road salts are used, near the ocean, areas with industrial pollution, acid rain, etc.—, you should take extra care to prevent corrosion. In winter, hose off the underside of your car at least once a month and be sure to clean the underside thoroughly when winter is over.
- When cleaning underneath the car, give particular attention to the components under the fenders and other areas that are hidden from view. Do a thorough job; just dampening the accumulated mud rather than washing it away will accelerate corrosion rather than prevent it. Water under high pressure and steam are particularly effective in removing accumulated mud and corrosive materials.
- When cleaning lower door panels, rocker panels and frame members, be sure that drain holes are kept open so that moisture can escape and not be trapped inside to accelerate corrosion.

تلفن شبانه روزی: ۰۲۱-۸۸۸۶۲۰۸۵

Keep your garage dry

Don't park your car in a damp, poorly ventilated garage. This creates a favorable environment for corrosion. This is particularly true if you wash your car in the garage or drive it into the garage when it is still wet or covered with snow, ice or mud. Even a heated garage can contribute to corrosion unless it is well ventilated so moisture is dispersed.

Keep paint and trim in good condition

Scratches or chips in the finish should be covered with "touch-up" paint as soon as possible to reduce the possibility of corrosion. If bare metal is showing through, the attention of a qualified body and paint shop is recommended.

Bird droppings : Bird droppings are highly corrosive and may damage painted surfaces in just a few hours. Always remove bird droppings as soon as possible.

Don't neglect the interior

Moisture can collect under the floor mats and carpeting and cause corrosion. Check under the mats periodically to be sure the carpeting is dry. Use particular care if you carry fertilizers, cleaning materials or chemicals in the car.

These should be carried only in proper containers and any spills or leaks should be cleaned up, flushed with clean water and thoroughly dried.

Interior care

G230201AUN

Interior general precautions

Prevent caustic solutions such as perfume and cosmetic oil from contacting the dashboard because they may cause damage or discoloration. If they do contact the dashboard, wipe them off immediately. See the instructions for the proper way to clean vinyl.

⚠ CAUTION

Never allow water or other liquids to come in contact with electrical/electronic components inside the vehicle as this may damage them.

⚠ CAUTION

When cleaning leather products (steering wheel, seats, etc.), use neutral detergents or low alcohol content solutions. If you use high alcohol content solutions or acid/alkaline detergents, the color of the leather may fade or the surface may get stripped off.

G230202AUN

Cleaning the upholstery and interior trim

Vinyl

Remove dust and loose dirt from vinyl with a whisk broom or vacuum cleaner. Clean vinyl surfaces with a vinyl cleaner.

Fabric

Remove dust and loose dirt from fabric with a whisk broom or vacuum cleaner. Clean with a mild soap solution recommended for upholstery or carpets. Remove fresh spots immediately with a fabric spot cleaner. If fresh spots do not receive immediate attention, the fabric can be stained and its color can be affected. Also, its fire-resistant properties can be reduced if the material is not properly maintained.

⚠ CAUTION

Using anything but recommended cleaners and procedures may affect the fabric's appearance and fire-resistant properties.

G230203ASA

Cleaning the lap/shoulder belt webbing

Clean the belt webbing with any mild soap solution recommended for cleaning upholstery or carpet. Follow the instructions provided with the soap. Do not bleach or re-dye the webbing because this may weaken it.

G230204AUN

Cleaning the interior window glass

If the interior glass surfaces of the vehicle become fogged (that is, covered with an oily, greasy or waxy film), they should be cleaned with glass cleaner. Follow the directions on the glass cleaner container.

⚠ CAUTION

Do not scrape or scratch the inside of the rear window. This may cause damage to the rear window defroster grid.

FarmaSOS.com

EMISSION CONTROL SYSTEM (IF EQUIPPED)

G270000AUN

The emission control system of your vehicle is covered by a written limited warranty. Please see the warranty information contained in the Warranty & Maintenance booklet in your vehicle.

Your vehicle is equipped with an emission control system to meet all applicable emission regulations.

There are three emission control systems, as follows.

(1) Crankcase emission control system
(2) Evaporative emission control system
(3) Exhaust emission control system

In order to assure the proper function of the emission control systems, it is recommended that you have your car inspected and maintained by an authorized KIA dealer in accordance with the maintenance schedule in this manual.

Caution for the Inspection and Maintenance Test (With Electronic Stability Program (ESP) system)

- **To prevent the vehicle from misfiring during dynamometer testing, turn the Electronic Stability Program (ESP) system off by pressing the ESP switch.**
- **After dynamometer testing is completed, turn the ESP system back on by pressing the ESP switch again.**

امداد خودرو فارما
تلفن شبانه روزی: ۰۲۱-۸۸۸۶۲۰۸۵
FarmaSOS.com

G270100AUN

1. Crankcase emission control system

The positive crankcase ventilation system is employed to prevent air pollution caused by blow-by gases being emitted from the crankcase. This system supplies fresh filtered air to the crankcase through the air intake hose. Inside the crankcase, the fresh air mixes with blow-by gases, which then pass through the PCV valve into the induction system.

G270200AUN

2. Evaporative emission control system

The Evaporative Emission Control System is designed to prevent fuel vapors from escaping into the atmosphere.

G270201AUN

Canister

Fuel vapors generated inside the fuel tank are absorbed and stored in the onboard canister. When the engine is running, the fuel vapors absorbed in the canister are drawn into the surge tank through the purge control solenoid valve.

G270202AUN

Purge Control Solenoid Valve (PCSV)

The purge control solenoid valve is controlled by the Engine Control Module (ECM); when the engine coolant temperature is low during idling, the PCSV closes so that evaporated fuel is not taken into the engine. After the engine warms-up during ordinary driving, the PCSV opens to introduce evaporated fuel to the engine.

G270300AUN

3. Exhaust emission control system

The Exhaust Emission Control System is a highly effective system which controls exhaust emissions while maintaining good vehicle performance.

G270301AUN

Vehicle modifications

This vehicle should not be modified. Modification of your vehicle could affect its performance, safety or durability and may even violate governmental safety and emissions regulations.

In addition, damage or performance problems resulting from any modification may not be covered under warranty.

FarmaSOS.com

G270302AUN

Engine exhaust gas precautions (carbon monoxide)

- Carbon monoxide can be present with other exhaust fumes. Therefore, if you smell exhaust fumes of any kind inside your vehicle, have it inspected and repaired immediately. If you ever suspect exhaust fumes are coming into your vehicle, drive it only with all the windows fully open. Have your vehicle checked and repaired immediately.

⚠ WARNING - Exhaust

Engine exhaust gases contain carbon monoxide (CO). Though colorless and odorless, it is dangerous and could be lethal if inhaled. Follow the instructions on this page to avoid CO poisoning.

- Do not operate the engine in confined or closed areas (such as garages) any more than it is necessary to move the vehicle in or out of the area.
- When the vehicle is stopped in an open area for more than a short time with the engine running, adjust the ventilation system (as needed) to draw outside air into the vehicle.
- Never sit in a parked or stopped vehicle for any extended time with the engine running.
- When the engine stalls or fails to start, excessive attempts to restart the engine may cause damage to the emission control system.

G270303AUN

Operating precautions for catalytic converters (if equipped)

⚠ WARNING - Fire

A hot exhaust system can ignite flammable items under your vehicle. Do not park, idle or drive the vehicle over or near flammable objects, such as grass, vegetation, paper, leaves, etc.

Your vehicle is equipped with a catalytic converter emission control device.

Therefore, the following precautions must be observed:

- Use only UNLEADED FUEL for gasoline engines.
- Do not operate the vehicle when there are signs of engine malfunction, such as misfire or a noticeable loss of performance.
- Do not misuse or abuse the engine. Examples of misuse are coasting with the ignition off and descending steep grades in gear with the ignition off.
- Do not operate the engine at high idle speed for extended periods (5 minutes or more).
- Do not modify or tamper with any part of the engine or emission control system. All inspections and adjustments must be made by an authorized KIA dealer.
- Avoid driving with a very low fuel level. If you run out of gasoline, it could cause the engine to misfire and result in excessive loading of the catalytic converter.

Failure to observe these precautions could result in damage to the catalytic converter and to your vehicle. Additionally, such actions could void your warranties.

امداد خودرو فارما
تلفن شبانه روزی: ۰۲۱-۸۸۸۶۲۰۸۵
FarmaSOS.com

Dimensions / 8-2
Bulb wattage / 8-2
Tires and wheels / 8-3
Recommended lubricants and capacities / 8-4
Vehicle identification number (VIN) / 8-6
Vehicle certification label / 8-6
Tire specification and pressure label / 8-6
Engine number / 8-7

امداد خودرو فارما
تلفن شبانه روزی: ۰۲۱-۸۸۸۶۲۰۸۵
FarmaSOS.com

Specifications & Consumer information 8

DIMENSIONS

I010000ASA

Item	mm (in)
Overall length	3,535 (139.17)
Overall width	1,595 (62.80)
Overall height	1,480 (58.27)
Front tread	1,400 (55.11)
Rear tread	1,385 (54.53)
Wheelbase	2,370 (93.31)

BULB WATTAGE

I030000ASA

Light Bulb		Wattage
Headlights (Low)		55
Headlights (High)		60
Front turn signal lights	For Europe	21
	Except Europe	28
Position lights	For Europe	5
	Except Europe	8
Side repeater lights*		5 or LED
Front fog lights*		27
Rear fog light*		21
Stop and tail lights		21/5
Rear turn signal lights		21
Back-up lights		21
High mounted stop light*		16
License plate lights		5
Dome lights		10
Luggage lamp		5

* : If equipped

امداد خودرو فارما
۰۲۱-۸۸۸۶۲۰۸۵
FarmaSOS.com

TIRES AND WHEELS

I020000ASA

Tires

Item	Engine	Tire	Wheel	Inflation pressure bar (psi,kPa)		Wheel lug nut torque kg•m (lb•ft, N•m)
				Front	Rear	
Full size tire	Gasoline	155/70 R13	4.0B x 13	2. 2 (32, 220)	2. 2 (32, 220)	9~11 (65~79, 88~107)
		165/60 R14	5.0J x 14			
		175/50 R15	5.5J x 15			
	Diesel	175/60 R14	5.0J x 14	2. 2 (32, 220)	2. 2 (32, 220)	9~11 (65~79, 88~107)
Compact spare tire	-	T105/70 D14	4.0T x 14	4.2 (60, 420)	4.2 (60, 420)	9~11 (65~79, 88~107)

امداد خودرو فارما
تلفن شبانه‌روزی: ۰۲۱-۸۸۸۶۲۰۸۵
FarmaSOS.com

RECOMMENDED LUBRICANTS AND CAPACITIES

I040000ASA

To help achieve proper engine and powertrain performance and durability, use only lubricants of the proper quality. The correct lubricants also help promote engine efficiency that results in improved fuel economy.

These lubricants and fluids are recommended for use in your vehicle.

Lubricant		Volume	Classification
Engine oil *1 *2 Recommends - For Europe Shell HELIX Motor oils	Gasoline Engine	3.0 *l*	API Service SM*3, ILSAC GF-4 or above
	Diesel Engine	5.3 *l*	API Service CH-4 or above, ACEA B4
Manual transaxle fluid	Gasoline Engine	1.9 *l*	API SERVICE GL-4 SAE75W-85 (fill for-life)
	Diesel Engine		
Automatic transaxle fluid	Gasoline Engine	6.1 *l*	Diamond ATF SP-III, SK ATF SP-III
Coolant	Gasoline Engine	4.7 *l*	Ethylene glycol base for aluminum radiator
	Diesel Engine	5.3 *l*	
Brake/Clutch fluid		0.7~0.8 *l*	FMVSS116 DOT-3 or DOT-4
Fuel		35 *l*	-

امداد خودرو فارما
تلفن شبانه روزی ۰۲۱-۸۸۸۶۲۰۸۵
FarmaSOS.com

*1 Refer to the recommended SAE viscosity numbers on the next page.

*2 Engine oils labeled Energy Conserving Oil are now available. Along with other additional benefits, they contribute to fuel economy by reducing the amount of fuel necessary to overcome engine friction. Often, these improvements are difficult to measure in everyday driving, but in a year's time, they can offer significant cost and energy savings.

*3 If the API service SM engine oil is not available in your country, you are able to use API service SL.

I040100AUN

Recommended SAE viscosity number

⚠ CAUTION

Always be sure to clean the area around the filler plug, drain plug, or dipstick before checking or draining any lubricant. This is especially important in dusty or sandy areas and when the vehicle is used on unpaved roads. Cleaning the plug and dipstick areas will prevent dirt and grit from entering the engine and other mechanisms that could be damaged.

Engine oil viscosity (thickness) has an effect on fuel economy and cold weather operating (engine start and engine oil flowability). Lower viscosity engine oils can provide better fuel economy and cold weather performance, however, higher viscosity engine oils are required for satisfactory lubrication in hot weather. Using oils of any viscosity other than those recommended could result in engine damage.

When choosing an oil, consider the range of temperature your vehicle will be operated in before the next oil change. Proceed to select the recommended oil viscosity from the chart.

ایران خودرو فارما
تلفن شبانه روزی: ۰۲۱-۸۸۸۶۲۰۸۵
FarmaSOS.com

Temperature Range for SAE Viscosity Numbers

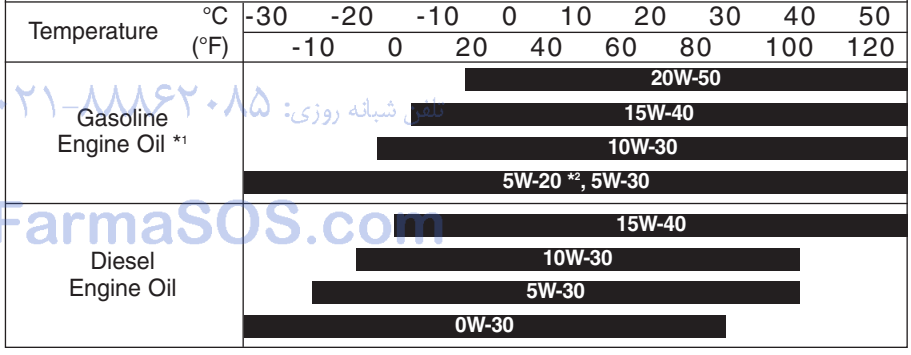

*1 : For better fuel economy, it is recommended to use the engine oil of a viscosity grade SAE 5W-20*2 (API SM / ILSAC GF-4). However, if the engine oil is not available in your country, select the proper engine oil using the engine oil viscosity chart.

*2 : In Middle East, do not use the engine oil of viscosity grade SAE 5W-20.

VEHICLE IDENTIFICATION NUMBER (VIN)

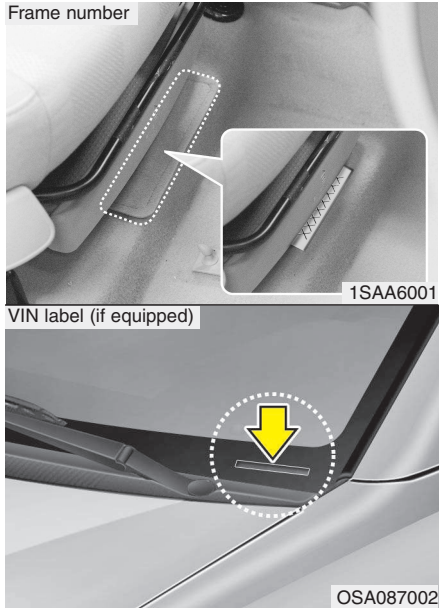

H010000ASA

The vehicle identification number (VIN) is the number used in registering your car and in all legal matters pertaining to its ownership, etc.

VEHICLE CERTIFICATION LABEL

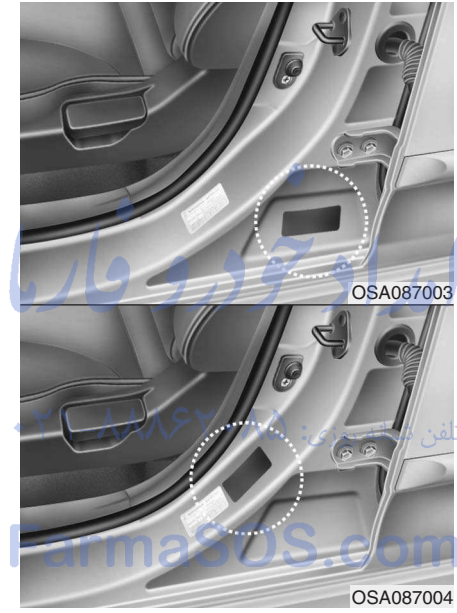

H020000ASA

The vehicle certification label gives the vehicle identification number (VIN).

TIRE SPECIFICATION AND PRESSURE LABEL



H030000AUN

The tires supplied on your new vehicle are chosen to provide the best performance for normal driving.

The tire label located on the driver's side center pillar gives the tire pressures recommended for your car.

ParmaSOS.com

ENGINE NUMBER

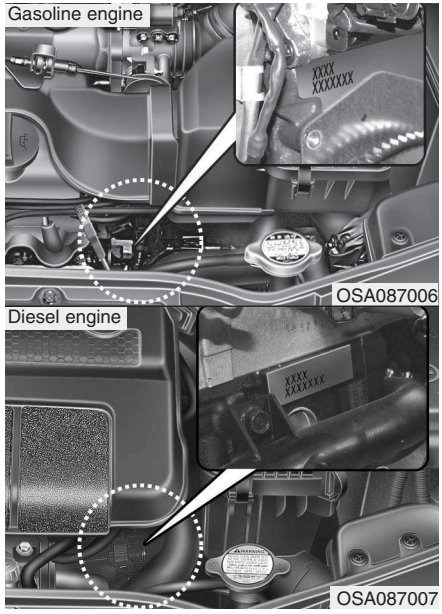

H04000AUN-EE

The engine number is stamped on the engine block as shown in the drawing.

امداد خودرو فارما
تلفن شبانه روزی: ۰۲۱-۸۸۸۶۲۰۸۵
FarmaSOS.com

امداد خودرو فارما
تلفن شبانه روزی: ۸۸۸۶۲۰۸۵-۰۲۱
FarmaSOS.com

Index

A

Air bag - supplemental restraint system ····· 3-36
Air cleaner ····· 7-34
Appearance care ····· 7-64
Audio system ····· 4-77
Automatic climate control system ····· 4-60
Automatic transaxle ····· 5-10
Automatic transaxle fluid ····· 7-29

B

Battery ····· 7-38
Before driving ····· 5-3
Brake system ····· 5-16
Brakes/clutch fluid ····· 7-27
Bulb wattage ····· 8-2

C

Child restraint system ····· 3-26
Climate control air filter ····· 7-35

D

Defroster ····· 4-51
Dimensions ····· 8-2
Door locks ····· 4-8

E

Economical operation ····· 5-26
Emergency commodity ····· 6-28
Emergency starting ····· 6-4
Emission control system ····· 7-70
Engine compartment ····· 2-4, 7-2
Engine coolant ····· 7-25
Engine number ····· 8-7
Engine oil ····· 7-23
Explanation of scheduled maintenance items ····· 7-21

F

Fuel filler lid ····· 4-17
Fuel filter ····· 7-32
Fuel requirements ····· 1-2
Fuses ····· 7-51

H

Hazard warning flasher ····· 4-41, 6-2
Hood ····· 4-15
How to use this manual ····· 1-2

I

If the engine overheats ····· 6-6

امداد خودرو فارما
تلفن شبانه روزی ۰۲۱-۸۸۸۶۲۰۸۵
FarmaSOS.com

If the engine will not start ····6-3
If you have a flat tire (with spare tire)····6-7
If you have a flat tire (with TireMobilityKit)····6-15
In case of an emergency while driving····6-2
Indicator symbols on the instrument cluster ····1-6
Instrument cluster ····4-25
Instrument panel overview····2-3
Interior features····4-72
Interior light ····4-50
Interior overview····2-2

K

Key positions ····5-4
Keys ····4-2

L

Light bulbs ····7-58
Lighting····4-41

M

Maintenance services····7-4
Manual climate control system····4-52
Manual transaxle····5-7
Mirrors ····4-22

O

Owner maintenance ····7-6

P

Parking brake ····7-31

R

Rear parking assist system····4-38
Recommended lubricants and capacities····8-4
Remote keyless entry····4-4
Road warning····6-2

S

Scheduled maintenance service ····7-8
Seat belts····3-14
Seats····3-2
Special driving conditions ····5-28
Starting the engine ····5-5
Steering wheel ····4-19
Storage compartment····4-70

T

Tailgate····4-11

ایران خودرو فارما
۰۲۱-۸۸۸۶۲۰۸۵ تلفن شبانه روزی:
FarmaSOS.com

Theft-alarm system ····4-6
Tire specification and pressure label ····8-6
Tires and wheels····7-41, 8-3
Towing ····6-24
Trailer towing····5-36

V

Vehicle break-in process ····1-5
Vehicle certification label ····8-6
Vehicle identification number (VIN) ····8-6
Vehicle weight ····5-44

W

Washer fluid ····7-31
Windows ····4-12
Windshield defrosting and defogging····4-67
Winter driving····5-32
Wiper blades ····7-37
Wipers and washers ····4-46

امداد خودرو فارما
تلفن شبانه روزی: ۰۲۱-۸۸۵۲۰۸۵
FarmaSOS.com