KIA, THE COMPANY

Thank you for becoming the owner of a new Kia vehicle.

As a global car manufacturer focused on building high-quality, value for money prices, Kia Motors is dedicated to providing you with a customer service experience that exceeds your expectations.

امداد خودرو فارما

All information contained in this Owner's Manual is accurate at the time of publication. However, Kia reserves the right to make changes at any time so that our policy of continual product improvement can be carried out.

تلفن شبانه روزی: ۰۲۱-۸۸۸۲۰۰۸۵

This manual applies to all Kia models and includes descriptions and explanations of optional as well as standard equipment. As a result, you may encounter material in this manual that is not applicable to your specific Kia vehicle.

FarmasOS.com

Drive safely and enjoy your Kia!

Thank you for choosing a KIA vehicle.

When you require service, remember that your KIA Dealer knows your vehicle best. Your dealer has factory-trained technicians, recommended special tools, genuine KIA replacement parts and is dedicated to your complete satisfaction.

Because subsequent owners require this important information as well, this publication should remain with the vehicle if it is sold.

This manual will familiarize you with operational, maintenance and safety information about your new vehicle. It is supplemented by a Warranty and Consumer Information manual that provides important information on all warranties regarding your vehicle.

We urge you to read these publications carefully and follow the recommendations to help assure enjoyable and safe operation of your new vehicle.

KIA offers a great variety of options, components and features for its various models. Therefore, some of the equipment described in this manual, along with the various illustrations, may not be applicable to your particular vehicle.

The information and specifications provided in this manual were accurate at the time of printing. KIA reserves the right to discontinue or change specifications or design at any time without notice and without incurring any obligation. If you have questions, always check with your KIA dealer.

We assure you of our continuing interest in your motoring pleasure and satisfaction in your KIA vehicle.

امداد خودرو مالیا
تلفن: ۰۲۱-۸۸۸۶۲۰۸۵
FarmaSOC.com

© 2011 Kia Canada Inc.

All rights reserved. Reproduction by any means, electronic or mechanical, including photocopying, recording, or by any information storage and retrieval system or translation in whole or part is not permitted without written authorization from Kia Canada Inc..

Printed in Korea

TABLE OF CONTENTS

Introduction	1
Your vehicle at a glance	2
Safety features of your vehicle	3
Features of your vehicle	4
Driving your vehicle	5
What to do in an emergency	6
Maintenance	7
Specifications & Consumer information	8
Index	I

امداد خودرو فارما
۰۲۱-۸۸۸۶۱۰۷۸ تلفن شبانه روزی
FarmaSOS.com

امداد خودرو فارما
تلفن شبانه روزی: ۰۲۱-۸۸۸۶۲۰۸۵
FarmaSOS.com

Index

I

A

Air cleaner ····· 7-31
Airbag-supplemental restraint system ····· 3-35
Appearance care ····· 7-59
Audio system ····· 4-94
Automatic climate control system ····· 4-78
Automatic transaxle ····· 5-15
Automatic transaxle fluid ····· 7-30

B

Battery ····· 7-34
Before driving ····· 5-3
Brake system ····· 5-23
Brake/clutch fluid ····· 7-28
Bulb wattage ····· 8-2

C

Child restraint system ····· 3-27
Climate control air filter ····· 7-32
Cruise control system ····· 5-33

D

Defroster ····· 4-67
Dimensions ····· 8-2
Door locks ····· 4-12

E

Economical operation ····· 5-37
Emergency starting ····· 6-4
Emission control system ····· 7-65
Engine compartment ····· 2-4/7-2
Engine coolant ····· 7-25
Engine number ····· 8-7
Engine oil ····· 7-24
ENGINE START/STOP button ····· 5-6
Explanation of scheduled maintenance items ····· 7-21

F

Fuel filler lid ····· 4-25
Fuel requirements ····· 1-3
Fuses ····· 7-50

H

Hazard warning flasher ····· 4-58
Hood ····· 4-23
How to use this manual ····· 1-2

I

If the engine overheats ····· 6-6
If the engine will not start ····· 6-3
If you have a flat tire ····· 6-7

امداد خودرو فارما
تلفن شبانه روزی: ۰۲۱-۸۸۷۳۲۰۸۵
FarmaSOS.com

In case of an emergency while driving ····· 6-2
Indicator symbols on the instrument cluster ····· 1-5
Instrument cluster ····· 4-39
Instrument panel overview ····· 2-3
Interior features ····· 4-96
Interior light ····· 4-66
Interior overview ····· 2-2

K

Key positions ····· 5-4
Keys ····· 4-2

L

Lighting ····· 4-59

M

Maintenance schedule ····· 7-6
Maintenance services ····· 7-3
Manual climate control system ····· 4-69
Manual transaxle ····· 5-12
Mirrors ····· 4-35

O

Owner maintenance ····· 7-4

P

Parking brake ····· 7-31
Power steering fluid ····· 7-29

R

Rearview camera ····· 4-58
Recommended lubricants and capacities ····· 8-4
Remote keyless entry ····· 4-8
Road warning ····· 6-2

S

Seat ····· 3-2
Seat belts ····· 3-15
Smart key ····· 4-6
Special driving conditions ····· 5-39
Starting the engine ····· 5-9
Steering wheel ····· 4-32
Storage compartment ····· 4-88
Sunroof ····· 4-28

T

Tire specification and pressure label ····· 8-7
Tires and wheels ····· 7-37/8-3
Towing ····· 6-15
Trailer towing ····· 5-45

امداد خودرو فارس
تلفن شبانه روزی: ۰۲۱-۸۸۸۲۰۸۵۱
FarsSOS.com

Trunk ····· 4-16

V

Vehicle break-in process ····· 1-4
Vehicle certification label ····· 8-6
Vehicle identification number (VIN) ····· 8-6
Vehicle load limit ····· 5-46
Vehicle weight ····· 5-51

W

Washer fluid ····· 7-30
Windows ····· 4-20
Windshield defrosting and defogging ····· 4-85
Winter driving ····· 5-43
Wiper blades ····· 7-32
Wipers and washers ····· 4-63

امداد خودرو فارما
تلفن شبانه روزی: ۰۲۱-۸۸۸۵۲۰۸۵
FarmaSOS.com

Introduction

1

How to use this manual / 1-2
Fuel requirements / 1-3
Vehicle break-in process / 1-4
Indicator symbols on the instrument cluster / 1-5

امداد خودرو فارما
تلفن شبانه روزی: ۰۲۱-۸۸۸۶۲۰۸۵
FarmaSOS.com

HOW TO USE THIS MANUAL

A010000AAM

We want to help you get the greatest possible driving pleasure from your vehicle. Your Owner's Manual can assist you in many ways. We strongly recommend that you read the entire manual. In order to minimize the chance of death or injury, you must read the WARNING and CAUTION sections in the manual.

Illustrations complement the words in this manual to best explain how to enjoy your vehicle. By reading your manual, you will learn about features, important safety information, and driving tips under various road conditions.

The general layout of the manual is provided in the Table of Contents. Use the index when looking for a specific area or subject; it has an alphabetical listing of all information in your manual.

Sections: This manual has eight sections plus an index. Each section begins with a brief list of contents so you can tell at a glance if that section has the information you want.

امداد خودرو فارما
تلفن شبانه روزی: ۰۲۱-۸۸۸۶۲۰۸۵
FarmaSOS.com

You will find various WARNINGs, CAUTIONs, and NOTICEs in this manual. These WARNINGs were prepared to enhance your personal safety. You should carefully read and follow ALL procedures and recommendations provided in these WARNINGS, CAUTIONS and NOTICES.

⚠ WARNING

A WARNING indicates a situation in which harm, serious bodily injury or death could result if the warning is ignored.

⚠ CAUTION

A CAUTION indicates a situation in which damage to your vehicle could result if the caution is ignored.

✻ NOTICE

A NOTICE indicates interesting or helpful information is being provided.

FUEL REQUIREMENTS

A020101AHM-EU

Your new KIA vehicle is designed to use only unleaded fuel having a pump octane number ((R+M)/2) of 87 (Research Octane Number 91) or higher.

Your new vehicle is designed to obtain maximum performance with UNLEADED FUEL, as well as minimize exhaust emissions and spark plug fouling.

⚠ CAUTION

Never add any fuel system cleaning agents to the fuel tank other than what has been specified. (Consult an authorized KIA dealer for details.)

⚠ WARNING

- **Do not "top off" after the nozzle automatically shuts off when refueling.**
- **Tighten the cap until it clicks, otherwise the Check Engine light will illuminate.**
- **Always check that the fuel cap is installed securely to prevent fuel spillage in the event of an accident.**

A020103AUN-EU

Gasoline containing alcohol and methanol

Gasohol, a mixture of gasoline and ethanol (also known as grain alcohol), and gasoline or gasohol containing methanol (also known as wood alcohol) are being marketed along with or instead of leaded or unleaded gasoline.

Do not use gasohol containing more than 10% ethanol, and do not use gasoline or gasohol containing any methanol. Either of these fuels may cause drivability problems and damage to the fuel system.

Discontinue using gasohol of any kind if drivability problems occur.

Vehicle damage or drivability problems may not be covered by the manufacturer's warranty if they result from the use of:

1. Gasohol containing more than 10% ethanol.
2. Gasoline or gasohol containing methanol.
3. Leaded fuel or leaded gasohol.

"E85" fuel is an alternative fuel comprised of 85 percent ethanol and 15 percent gasoline, and is manufactured exclusively for use in Flexible Fuel Vehicles. "E85" is not compatible with your vehicle. Use of "E85" may result in poor engine performance and damage to your vehicle's engine and fuel system. KIA recommends that customers do not use fuel with an ethanol content exceeding 10 percent.

⚠ CAUTION

Your New Vehicle Limited Warranty does not cover damage to the fuel system or any performance problems caused by the use of "E85" fuel.

⚠ CAUTION

Never use gasohol which contains methanol. Discontinue use of any gasohol product which impairs drivability.

FarmaSOS.com

A020104AUN

Use of MTBE

KIA recommends avoiding fuels containing MTBE (Methyl Tertiary Butyl Ether) over 15.0% vol. (Oxygen Content 2.7% weight) in your vehicle.

Fuel containing MTBE over 15.0% vol. (Oxygen Content 2.7% weight) may reduce vehicle performance and produce vapor lock or hard starting.

⚠ CAUTION

Your New Vehicle Limited Warranty may not cover damage to the fuel system and any performance problems that are caused by the use of fuels containing methanol or fuels containing MTBE (Methyl Tertiary Butyl Ether) over 15.0% vol. (Oxygen Content 2.7% weight.)

A020105AUN

Do not use methanol

Fuels containing methanol (wood alcohol) should not be used in your vehicle. This type of fuel can reduce vehicle performance and damage components of the fuel system.

A020106AUN

Gasolines for cleaner air

To help contribute to cleaner air, KIA recommends that you use gasolines treated with detergent additives, which help prevent deposit formation in the engine. These gasolines will help the engine run cleaner and enhance performance of the Emission Control System.

تلفن شبانه روزی:
Farmasos.com

A020107AUN

Operation in foreign countries

If you are going to drive your vehicle in another country, be sure to:

- Observe all regulations regarding registration and insurance.
- Determine that acceptable fuel is available.

VEHICLE BREAK-IN PROCESS

A030000AUN

No special break-in period is needed. By following a few simple precautions for the first 1,000 km (600 miles) you may add to the performance, economy and life of your vehicle.

- Do not race the engine.
- While driving, keep your engine speed (rpm, or revolutions per minute) between 2,000 rpm and 4,000 rpm.
- Do not maintain a single speed for long periods of time, either fast or slow. Varying engine speed is needed to properly break-in the engine.
- Avoid hard stops, except in emergencies, to allow the brakes to seat properly.
- Don't let the engine idle longer than 3 minutes at one time.
- Don't tow a trailer during the first 2,000 km (1,200 miles) of operation.

INDICATOR SYMBOLS ON THE INSTRUMENT CLUSTER

A050000ATD-EC

- Door ajar warning light
- Trunk lid (or tailgate) open warning light
- Seat belt warning light
- High beam indicator
- Turn signal indicator
- Front fog light indicator*
- ESC indicator*
- ESC OFF indicator*
- ABS warning light
- Parking brake & Brake fluid warning light
- Engine oil pressure warning light
- Charging system warning light
- Malfunction indicator*
- Air bag warning light*
- Cruise indicator*
- Cruise SET indicator*
- Engine coolant temperature warning light*
- Low fuel level warning light
- Electric power steering (EPS) system warning light*
- Shift pattern indicator
- ECOMINDER™ indicator*
- Immobilizer indicator

* : if equipped

❊ For more detailed explanations, refer to “Instrument cluster” in section 4.

امداد خودرو فارما
تلفن شبانه روزی: ۰۲۱-۸۸۸۶۲۰۸۵
FarmaSOS.com

Your vehicle at a glance

2

Interior overview / 2-2
Instrument panel overview / 2-3
Engine compartment / 2-4

امداد خودرو فارما
تلفن شبانه روزی: ۰۲۱-۸۸۸۶۲۰۸۵
FarmaSOS.com

INTERIOR OVERVIEW

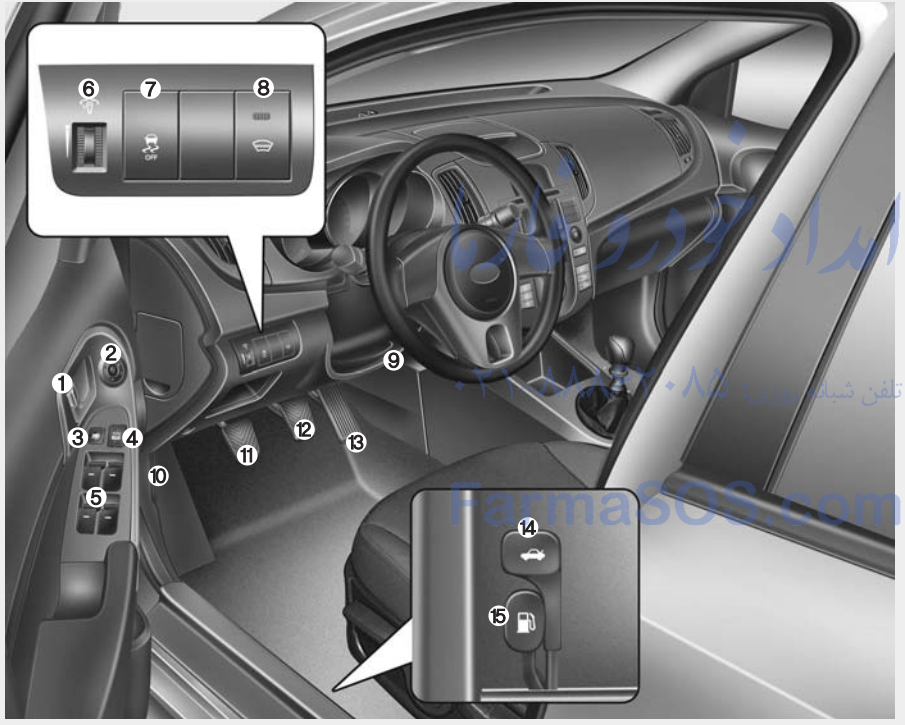

1. Door lock/unlock button 4-13
2. Outside rearview mirror control switch*.....4-37
3. Power window lock button* 4-21
4. Central door lock switch* 4-13
5. Power window switches*.....4-20
6. Instrument panel illumination control knob*.....4-40
7. ESC OFF button*.....5-28
8. Front wiper deicer button*.....4-68
9. Steering wheel tilt lever* 4-33
10. Hood release lever 4-23
11. Clutch pedal* 5-9
12. Brake pedal.....5-23
13. Accelerator pedal.....5-9
14. Trunk lid release lever (4 door, 2 door) 4-16
15. Fuel filler lid release lever.....4-25

* : if equipped

OTD019001N

B010000ATD-EU

INSTRUMENT PANEL OVERVIEW

1. Instrument cluster 4-39
2. Light control / Turn signals.....4-59
3. Wiper/Washer 4-63
4. Horn 4-34
5. Steering wheel audio control*.....4-95
6. Auto cruise control*.....5-33
7. Driver's air bag.....3-47
8. Advanced lighting speaker switch* ...4-96
9. Steering wheel.....4-32
10. Ignition switch* or
ENGINE START/STOP button*...5-4/5-6
11. Digital clock.....4-92
12. Hazard 4-58/6-2
13. Audio* 4-94
14. Climate control system 4-69
15. Shift lever.....5-12/5-15
16. Aux, USB and iPod port* 4-97
17. Power outlet*.....4-91
18. Seat warmer*.....3-7
19. Passenger's air bag 3-47
20. Glove box.....4-88

* : if equipped

OTDC019002N

B020000ATD

ENGINE COMPARTMENT

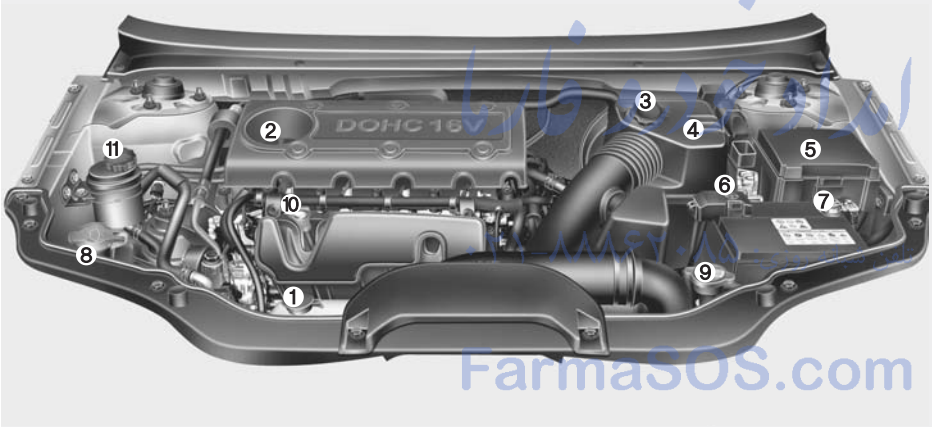

1. Engine coolant reservoir 7-26
2. Engine oil filler cap 7-24
3. Brake/clutch* fluid reservoir 7-28
4. Air cleaner.....7-31
5. Fuse box 7-50
6. Positive battery terminal 7-34
7. Negative battery terminal.....7-34
8. Windshield washer fluid reservoir 7-30
9. Radiator cap 7-27
10. Engine oil dipstick 7-24
11. Power steering fluid reservoir*.....7-29

* : if equipped

* The actual engine room in the vehicle may differ from the illustration.

OTD071055N-1

B010000ATD

FarmaSOS.com

Seat / 3-2
Seat belts / 3-15
Child restraint system / 3-27
Airbag-supplemental restraint system / 3-35

Safety features of your vehicle

3

امداد خودرو فارما
تلفن شبانه روزی: ۰۲۱-۸۸۸۶۲۰۸۵
FarmaSOS.com

SEAT

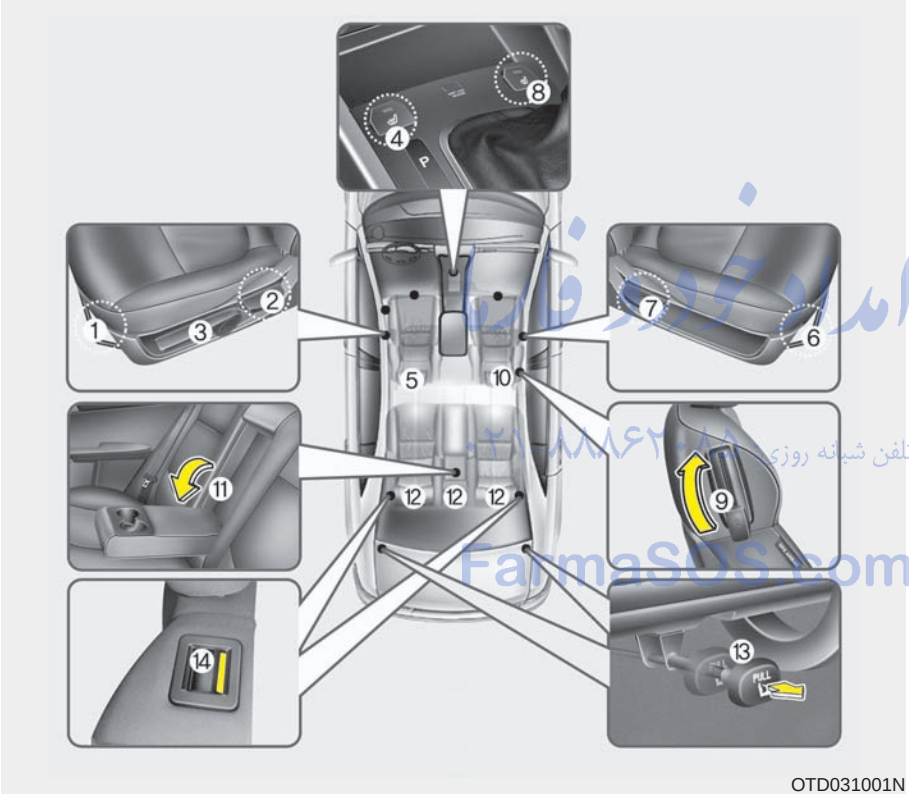

OTD031001N

C010000ATD-EU

Driver's seat

(1) Seat adjustment, forward / backward
(2) Seatback recliner
(3) Seat adjustment, height*
(4) Seat warmer switch*
(5) Headrest adjustment

Front passenger's seat

(6) Seat adjustment, forward / backward
(7) Seatback recliner
(8) Seat warmer switch*
(9) Walk-in seat (for 2door vehicle only)
(10) Headrest adjustment

Rear seat

(11) Armrest*
(12) Headrest adjustment*
(13) Seatback folding lever*
(for 4 door, 2 door vehicle only)
(14) Seatback folding lever
(for 5 door vehicle only)

* : if equipped

FarmaSOS.com

⚠ WARNING - Loose objects

Loose objects in the driver's foot area could interfere with the operation of the foot pedals, possibly causing an accident. Do not place anything under the front seats.

⚠ WARNING - Uprighting seat

When you return the seatback to its upright position, hold the seatback and return it slowly and be sure there are no other occupants around the seat. If the seatback is returned without being held and controlled, the back of the seat could spring forward resulting in accidental injury to a person struck by the seatback.

⚠ WARNING - Driver responsibility for front seat passenger

Riding in a vehicle with a front seatback reclined could lead to serious or fatal injury in an accident. If a front seat is reclined during an accident, the occupant's hips may slide under the lap portion of the seat belt applying great force to the unprotected abdomen. The Protection of your restraint system (seat belt and air bags) is greatly reduced by reclining your seat. Serious or fatal internal injuries could result. The driver must advise the front passenger to keep the seatback in an upright position whenever the vehicle is in motion.

FarmaSOS.com

⚠ WARNING - Driver's seat

- **Never attempt to adjust the seat while the vehicle is moving. This could result in loss of control, and an accident causing death, serious injury, or property damage.**
- **Do not allow anything to interfere with the normal position of the seatback. Storing items against a seatback or in any other way interfering with proper locking of a seatback could result in serious or fatal injury in a sudden stop or collision.**
- **Always drive and ride with your seatback upright and the lap portion of the seat belt snug and low across the hips. This is the best position to protect you in case of an accident.**
- **In order to avoid unnecessary and perhaps severe air bag injuries, always sit as far back as possible from the steering wheel while maintaining comfortable control of the vehicle. It is recommended that your chest is at least 250 mm (10 inches) away from the steering wheel.**

⚠ WARNING

After adjusting the seat, always check that it is securely locked into place by attempting to move the seat forward or reverse without using the lock release lever. Sudden or unexpected movement of the driver's seat could cause you to lose control of the vehicle resulting in an accident.

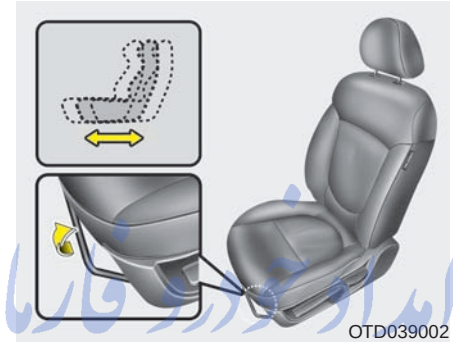
OTD039002

Front seat adjustment

C010101AHM

Forward and backward

To move the seat forward or backward:

1. Pull the seat slide adjustment lever up and hold it.
2. Slide the seat to the position you desire.
3. Release the lever and make sure the seat is locked in place.

Adjust the seat before driving, and make sure the seat is locked securely by trying to move forward and backward without using the lever. If the seat moves, it is not locked properly.

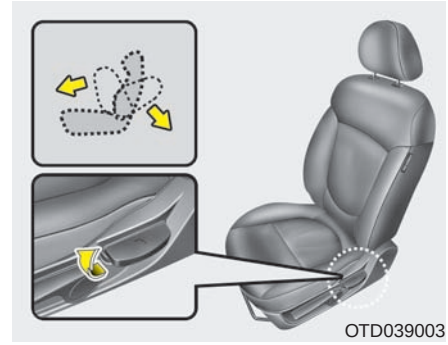
OTD039003

C010102AHM

Seatback angle

To recline the seatback:

1. Lean forward slightly and lift up the seatback recline lever.
2. Carefully lean back on the seat and adjust the seatback of the seat to the position you desire.
3. Release the lever and make sure the seatback is locked in place. (The lever MUST return to its original position for the seatback to lock.)

FamaSOS.com

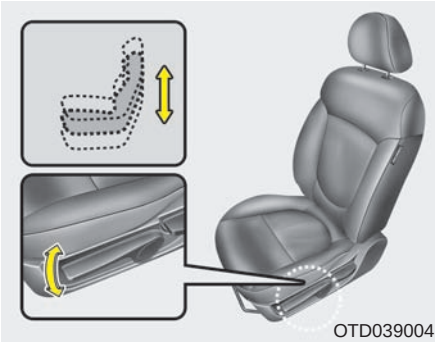

C010103APB

Seat height (for driver's seat) (if equipped)

To change the height of the seat, move the lever upwards or downwards.

- To lower the seat cushion, push down the lever several times.
- To raise the seat cushion, pull up the lever several times.

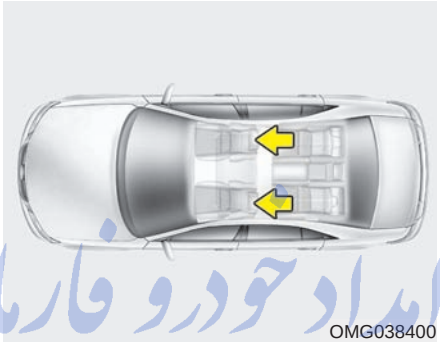

C010104BPB

Headrest

The driver's and front passenger's seats are equipped with a headrest for the occupant's safety and comfort.

The headrest not only provides comfort for the driver and front passenger, but also helps protect the head and neck in the event of a collision.

FarmaBDS.com

⚠ WARNING

- **For maximum effectiveness in case of an accident, the headrest should be adjusted so the middle of the headrest is at the same height of the center of gravity of an occupant's head. Generally, the center of gravity of most people's head is similar with the height of the top of their eyes. Also, adjust the headrest as close to your head as possible. For this reason, the use of a cushion that holds the body away from the seatback is not recommended.**
- **Do not operate the vehicle with the headrests removed as severe injury to the occupants may occur in the event of an accident. Headrests may provide protection against neck injuries when properly adjusted.**
- **Do not adjust the headrest height while the vehicle is in motion.**

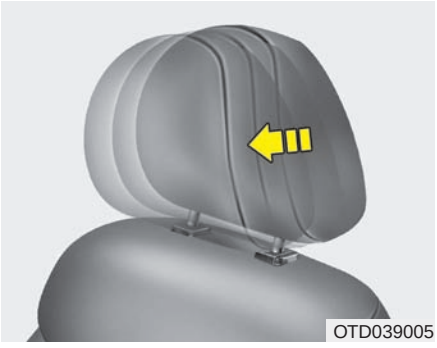
OTD039005

Forward and backward adjustment

The headrest may be adjusted forward to 3 different positions by pulling the headrest forward to the desired detent. To adjust the headrest to it's furthest backwards position, pull it fully forward to the farthest position and release it. Adjust the headrest so that it properly supports the head and neck.

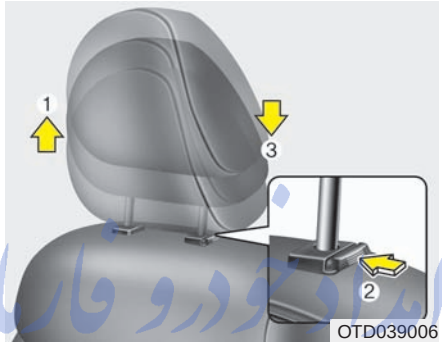

OTD039006

Adjusting the height up and down

To raise the headrest, pull it up to the desired position (1). To lower the headrest, push and hold the release button (2) on the headrest support and lower the headrest to the desired position (3).

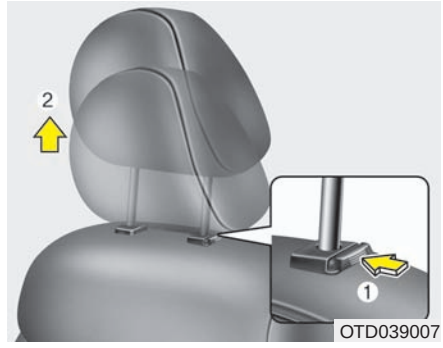

OTD039007

Removal

To remove the headrest, raise it as far as it can go then press the release button (1) while pulling the headrest upward (2).

FarmaSOS.com

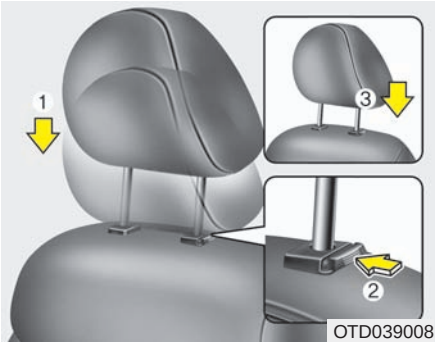

OTD039008

Reinstall

To reinstall the headrest, put the headrest poles (3) into the holes while pressing the release button (2). Then adjust (1) it to the appropriate height.

⚠ WARNING

Make sure the headrest locks in position after adjusting it to properly protect the occupants.

HNF2041-1

Active headrest (if equipped)

The active headrest is designed to move forward and upward during a rear impact. This helps to prevent the driver's and front passenger's head from moving backward and thus helps prevent neck injuries.

⚠ WARNING

A gap between the seat and the headrest release button may appear when seating on the seat or when you push or pull the seat. Be careful not to get your finger, etc. caught in the gap.

OTD031009

C010107ATD

Seat warmer (if equipped)

The seat warmers are provided to warm the front seats during cold weather. With the ignition switch in the ON position, push either of the switches to warm the driver's seat or the front passenger's seat.

During mild weather or under conditions where the operation of the seat warmer is not needed, keep the switches in the OFF position.

FarmaSOS.com

✻ NOTICE

With the seat warmer switch in the ON position, the heating system in the seat turns off or on automatically depending on the seat temperature.

⚠ CAUTION

- ***When cleaning the seats, do not use an organic solvent such as thinner, benzene, alcohol and gasoline. Doing so may damage the surface of the heater or seats.***
- ***To prevent overheating the seat warmer, do not place anything on the seats that insulates against heat, such as blankets, cushions or seat covers while the seat warmer is in operation.***
- ***Do not place heavy or sharp objects on seats equipped with seat warmers. Damage to the seat warming components could occur.***

⚠ WARNING - Seat warmer burns

Passengers should use extreme caution when using seat warmers due to the possibility of excess heating or burns. The seat warmer may cause burns even at low temperatures, especially if used for long periods of time. In particular, the driver must exercise extreme care for the following types of passengers:

1. **Infants, children, elderly or handicapped persons, or hospital outpatients**
2. **Persons with sensitive skin or those that burn easily**
3. **Fatigued individuals**
4. **Intoxicated individuals**
5. **Individuals taking medication that can cause drowsiness or sleepiness (sleeping pills, cold tablets, etc.)**

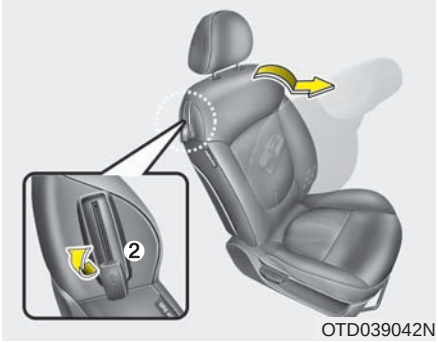

C010110ATD

Rear seat entry (for 2door vehicle only)

The front passenger's seatback should be tilted to enter the rear seat.

By pulling up the walk-in seat lever (2) on the back of the front passenger's seat-back, the seatback will tilt forward. Then push the seat forward to allow the occupants to enter.

By pulling up the seatback, the seatback will recline and return to the original position.

⚠ WARNING

Never attempt to adjust the seat while the vehicle is moving or when the passenger's seat is occupied as the seat may suddenly move and injure the passenger.

C010108ATD-EC

Seatback pocket (if equipped)

The seatback pocket is provided on the back of the front passenger's seatback.

⚠ WARNING - Seatback pocket

Do not put heavy or sharp objects in the seatback pocket. In an accident they could come loose from the pocket and injure vehicle occupants.

Rear seat adjustment

C010307ATD

Folding the rear seat (if equipped)

The rear seatbacks may be folded to facilitate carrying long items or to increase the luggage capacity of the vehicle.

⚠ WARNING

The purpose of the fold-down rear seatbacks is to allow you to carry longer objects that could not be accommodated in the luggage area.

Never allow passengers sit on top of the folded down seatback while the vehicle is moving. This is not a proper seating position and no seat belts are available for use. This could result in serious injury or death in case of an accident or sudden stop. Objects carried on the folded down seatback should not extend higher than the top of the front seatbacks. Doing this could allow cargo to slide forward and cause injury or damage during sudden stops.

FarmaSOS.com

To fold the rear seatback :

■ **4 door, 2 door vehicle**

1. Set the front seatback to the upright position and if necessary slide the front seat forward.
2. Lower the rear headrest to the lowest position.
3. Open the trunk.

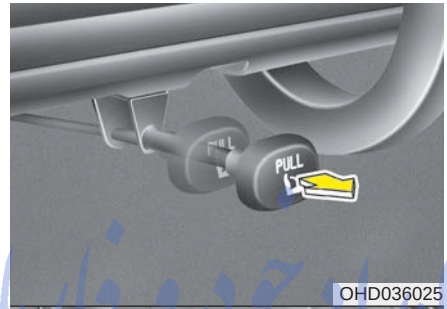

OHD036025

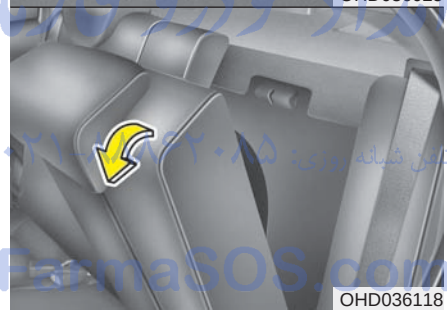

OHD036118

4. Pull out the lock release knob.
5. Fold the seatback forward and down firmly.

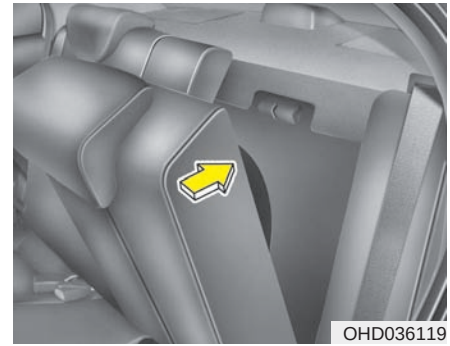

OHD036119

6. To use the rear seat, lift and push the seatback backward firmly until it clicks into place.
7. Return the rear seat belt to the proper position.

✻ NOTICE

If the seat belt locks after unfolding the rear seatback, pull out the locked seat belt, release it then pull it out again.

FarmaSOS.com

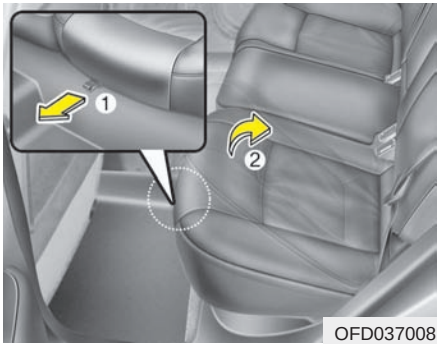

OFD037008

■ **5 door vehicle**

1. Set the front seatback to the upright position and if necessary, slide the front seat forward.
2. Pull the cushion folding strap (1) and lift the front portion of the seat cushion.

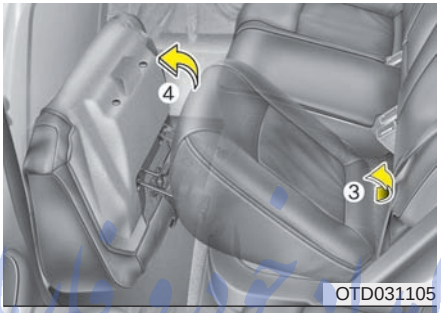

OTD031105

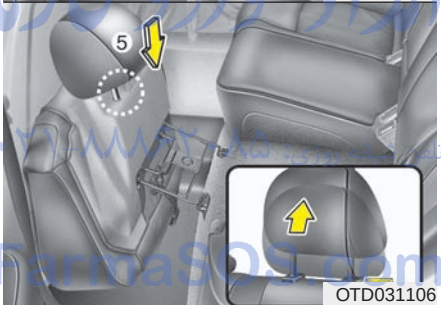

OTD031106

3. Lift the rear portion of the seat cushion. Stand the rear seat cushion vertically.
4. Remove the headrest from the rear seatback.
5. Stow the headrest by inserting the headrest poles into the holder on the bottom of the seat cushion.

OTD031107

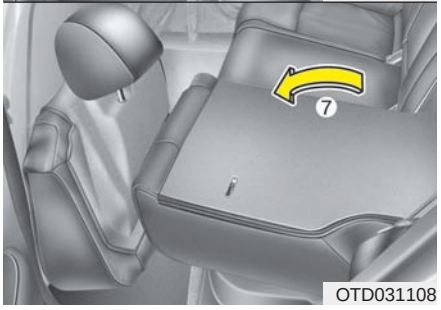

OTD031108

6. Pull the lock release lever (red visible) and fold the rear seatback forward and down firmly.

FarmaSOS.com

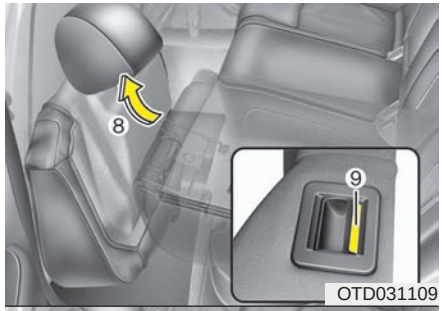

OTD031109

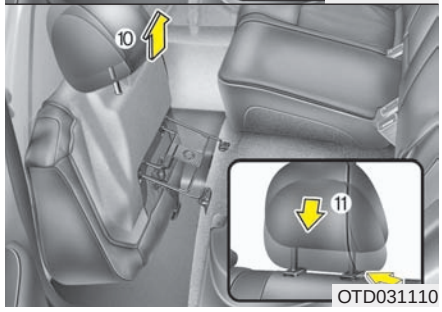

OTD031110

7. To use the rear seat, lift and push the seatback backward firmly until it clicks into place. Make sure the seatback is locked in place (red invisible).
8. Reposition the headrest on the seatback and adjust it to the desired position.

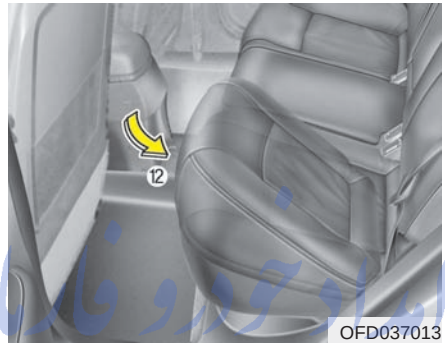

OFD037013

9. Return the seat cushion to the original position by pushing down the rear side of the seat cushion first. Make sure the seat cushion is locked in place.
10. Return the rear seat belt to the proper position.

FarmaSOS.com

⚠ WARNING

When you return the rear seatback to its upright position after being folded down:

Be careful not to damage the seat belt webbing or buckle. Do not allow the seat belt webbing or buckle to get caught or pinched in the rear seat. Ensure that the seatback is completely locked into its upright position by pushing on the top of the seatback. Otherwise, in an accident or sudden stop, the seat could fold down and allow cargo to enter the passenger compartment, which could result in serious injury or death.

⚠ CAUTION - Rear seat belts

When returning the rear seatbacks to the upright position, remember to return the rear shoulder belts to their proper position.

⚠ WARNING - Cargo

Cargo should always be secured to prevent it from being thrown about the vehicle in a collision and causing injury to the vehicle occupants. Do not place objects in the rear seats, since they cannot be properly secured and may hit the front seat occupants in a frontal collision.

⚠ WARNING - Cargo loading

Make sure the engine is off, the automatic transaxle is in P (Park) or the manual transaxle is in Reverse or 1st, and the parking brake is securely applied whenever loading or unloading cargo. Failure to take these steps may allow the vehicle to move if the shift lever is inadvertently moved to another position.

C010303APB

Headrest (if equipped)

■ 4 door, 2 door vehicle

The rear seat(s) is equipped with headrests in the outboard seating positions for the occupant's safety and comfort.

■ 5 door vehicle

The rear seat is equipped with headrests in all the seating positions for the occupant's safety and comfort.

The headrest not only provides comfort for passengers, but also helps protect the head and neck in the event of a collision.

تلفن شبانه روزی: ۰۲۱-۸۸۸۶۲۰۸۵

FarmaSOS.com

⚠ WARNING

- **For maximum effectiveness in case of an accident, the headrest should be adjusted so the middle of the headrest is at the same height of the center of gravity of an occupant's head. Generally, the center of gravity of most people's head is similar with the height of the top of their eyes. Also adjust the headrest as close to your head as possible. For this reason, the use of a cushion that holds the body away from the seatback is not recommended.**
- **Do not operate the vehicle with the headrests removed as severe injury to an occupant may occur in the event of an accident. Headrests may provide protection against severe neck injuries when properly adjusted.**

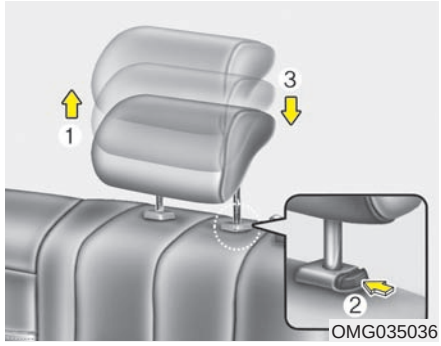

OMG035036

Adjusting the height up and down (if equipped)

To raise the headrest, pull it up to the desired position (1). To lower the headrest, push and hold the release button (2) on the headrest support and lower the headrest to the desired position (3).

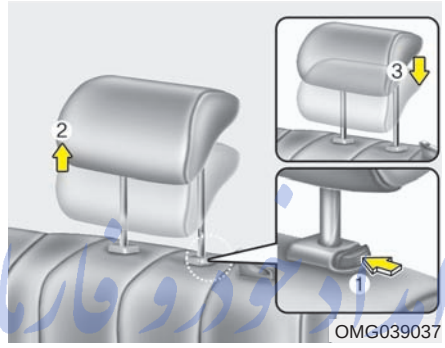

OMG039037

Removal

To remove the headrest, raise it as far as it can go then press the release button (1) while pulling the headrest upward (2).

To reinstall the headrest, put the headrest poles (3) into the holes while pressing the release button (1). Then adjust it to the appropriate height.

FarmaSOS.com

⚠ WARNING

Make sure the headrest locks in position after adjusting it to properly protect the occupants.

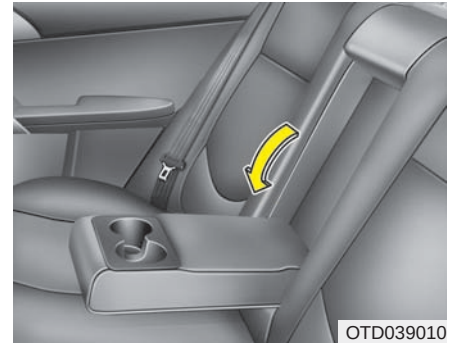
OTD039010

C010304ATD

Armrest (if equipped)

To use the armrest, pull it forward from the seatback.

SEAT BELTS

C020100AHM

Seat belt restraint system

⚠ WARNING

- **For maximum restraint system protection, the seat belts must always be used whenever the vehicle is moving.**
- **Seat belts are most effective when seatbacks are in the upright position.**
- **Children age 12 and under must always be properly restrained in the rear seat. Never allow children to ride in the front passenger seat. If a child over 12 must be seated in the front seat, he/she must be properly belted and the seat should be moved as far back as possible.**
- **Never wear the shoulder belt under your arm or behind your back. An improperly positioned shoulder belt can cause serious injuries in a crash. The shoulder belt should be positioned midway over your shoulder across your collarbone.**

(Continued)

(Continued)

- **Avoid wearing twisted seat belts. A twisted belt can't do its job as well. In a collision, it could even cut into you. Be sure the belt webbing is straight and not twisted.**
- **Be careful not to damage the belt webbing or hardware. If the belt webbing or hardware is damaged, replace it.**

امداد خودرو ما
تلفن شبانه روزی: ۰۲۱-۸۸۸۶۲۰۸۵
FarmaSOS.com

⚠ WARNING

Seat belts are designed to bear upon the bony structure of the body, and should be worn low across the front of the pelvis or the pelvis, chest and shoulders, as applicable; wearing the lap section of the belt across the abdominal area must be avoided.

Seat belts should be adjusted as firmly as possible, consistent with comfort, to provide the protection for which they have been designed.

A slack belt will greatly reduce the protection afforded to the wearer.

Care should be taken to avoid contamination of the webbing with polishes, oils and chemicals, and particularly battery acid. Cleaning may safely be carried out using mild soap and water. The belt should be replaced if webbing becomes frayed, contaminated or damaged.

(Continued)

(Continued)
It is essential to replace the entire assembly after it has been worn in a severe impact even if damage to the assembly is not obvious. Belts should not be worn with straps twisted. Each belt assembly must only be used by one occupant; it is dangerous to put a belt around a child being carried on the occupant's lap.

⚠ WARNING
No modifications or additions should be made by the user which will either prevent the seat belt adjusting devices from operating to remove slack, or prevent the seat belt assembly from being adjusted to remove slack.

C020101ATD-EU

Seat belt warning

As a reminder to the driver, the seat belt warning light will blink for approximately 6 seconds each time you turn the ignition switch ON regardless of belt fastening.

If the driver's seat belt is not fastened when the ignition switch is turned on, the seat belt warning light and the seat belt warning chime will operate for approximately 6 seconds. But if it is refastened within the 6 seconds, the warning light will blink till the 6 seconds and the warning chime will turn off immediately.

If the driver's seat belt is disconnected after the ignition switch is turned to the ON position, the seat belt warning light will operate for approximately 6 seconds. But if it is fastened within the 6 seconds, the warning light will turn off immediately. If the driver's seat belt is not fastened when the vehicle speed exceeds 10 km/h (6 mph), the seat belt warning light and chime will operate for approximately 11 times with a pattern of 6 seconds on and 24 seconds off until the belt is fastened or the vehicle speed decreases below 5 km/h (3 mph).

FarmaSOS.com

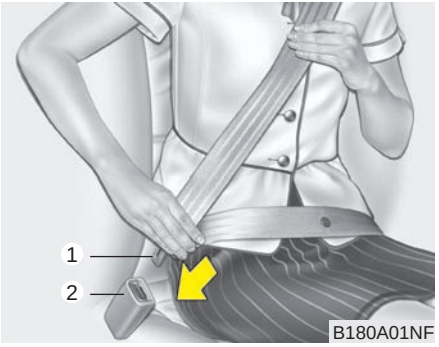

C020102ATD-EU

Seat belt - Driver's 3-point system with emergency locking retractor

To fasten your seat belt:

To fasten your seat belt, pull it out of the retractor and insert the metal tab (1) into the buckle (2). There will be an audible "click" when the tab locks into the buckle.

The seat belt automatically adjusts to the proper length only after the lap belt portion is adjusted manually so that it fits snugly around your hips. If you lean forward in a slow, easy motion, the belt will extend and let you move around. If there is a sudden stop or impact, however, the belt will lock into position. It will also lock if you try to lean forward too quickly.

✻ NOTICE

If you are not able to pull out the seat belt from the retractor, firmly pull the belt out and release it. Then you will be able to pull the belt out smoothly.

امداد خودرو فارما
تلفن شبانه روزی: ۰۲۱-۸۸۸۶۲۰۸۵
FarmaSOS.com

Height adjustment (if equipped)

You can adjust the height of the shoulder belt anchor to one of the 4 positions for maximum comfort and safety.

The height of the adjusting seat belt should not be too close to your neck. The shoulder portion should be adjusted so that it lies across your chest and midway over your shoulder near the door and not your neck.

To adjust the height of the seat belt anchor, lower or raise the height adjuster into an appropriate position.

To raise the height adjuster, pull it up (1). To lower it, push it down (3) while pressing the height adjuster button (2).

Release the button to lock the anchor into position. Try sliding the height adjuster to make sure that it has locked into position.

⚠ WARNING

- **Verify the shoulder belt anchor is locked into position at the appropriate height. Never position the shoulder belt across your neck or face. Improperly positioned seat belts can cause serious injuries in an accident.**
- **Failure to replace seat belts after an accident could leave you with damaged seat belts that will not provide protection in the event of another collision leading to personal injury or death. Replace your seat belts after being in an accident as soon as possible.**

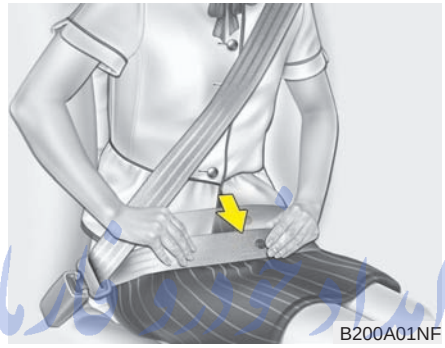
B200A01NF

⚠ WARNING

You should place the lap belt portion as low as possible and snugly across your hips, not on your waist. If the lap belt is located too high on your waist, it may increase the chance of injury in the event of a collision. Both arms should not be under or over the belt. Rather, one should be over and the other under, as shown in the illustration.

Never wear the seat belt under the arm that is near the door.

C020106AUN

Seat belts - Front passenger and rear seat 3-point system with combination locking retractor

To fasten your seat belt:

Combination retractor type seat belts are installed in the rear seat positions to help accommodate the installation of child restraint systems. Although a combination retractor is also installed in the front passenger seat position, it is strongly recommended that children always be seated in the rear seat. NEVER place any infant restraint system in the front seat of the vehicle.

This type of seat belt combines the features of both an emergency locking retractor seat belt and an automatic locking retractor seat belt. To fasten your seat belt, pull it out of the retractor and insert the metal tab into the buckle. There will be an audible "click" when the tab locks into the buckle. When not securing a child restraint, the seat belt operates in the same way as the driver's seat belt (Emergency Locking Retractor Type). It automatically adjusts to the proper length only after the lap belt portion of the seat belt is adjusted manually so that it fits snugly around your hips.

When the seat belt is fully extended from the retractor to allow the installation of a child restraint system, the seat belt operation changes to allow the belt to retract, but not to extend (Automatic Locking Retractor Type). Refer to “Using a child restraint system” in this section.

✻ NOTICE

Although the combination retractor provides the same level of protection for seated passengers in either emergency or automatic locking modes, it is recommended that seated passengers use the emergency locking feature for improved convenience. The automatic locking function is intended to facilitate child restraint installation. To convert from the automatic locking feature to the emergency locking operation mode, allow the unbuckled seat belt to fully retract.

⚠ CAUTION

Do NOT fold down the left portion of the rear seat back when the rear center seat belt is buckled. ALWAYS UNBUCKLE the rear center seat belt before folding down the left portion of the rear seat back. If the rear center seat belt is buckled when the left portion of the rear seat back is folded down, distortion and damage to the top portion of the seat back and seat belt garnish may result, causing the seat back to lock into the folded down position.

تلفن شبانه روزی: ۰۲۱-۸۸۸۶۲۰۸۵
FarmaSOS.com

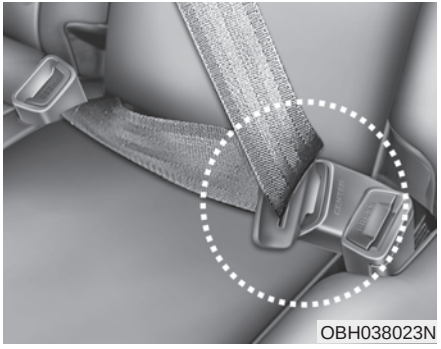

When using the rear center seat belt, the buckle with the “CENTER” mark must be used. (if equipped)

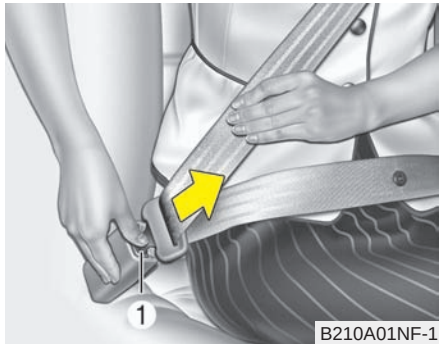

B210A01NF-1

To release the seat belt:

The seat belt is released by pressing the release button (1) of the locking buckle. When it is released, the belt should automatically draw back into the retractor.

If this does not happen, check the belt to be sure it is not twisted, then try again.

OED030300

C020200ATD-EC

Pre-tensioner seat belt (if equipped)

Your vehicle is equipped with driver's and front passenger's pre-tensioner seat belts. The purpose of the pre-tensioner is to make sure that the seat belts fit tightly against the occupant's body in certain frontal collisions. The pre-tensioner seat belts may be activated in crashes, where the frontal collision is severe enough.

When the vehicle stops suddenly, or if the occupant tries to lean forward too quickly, the seat belt retractor will lock into position. In certain frontal collisions, the pre-tensioner will activate and pull the seat belt into tighter contact against the occupant's body.

If the system senses excessive seat belt tension on the driver or passenger's seat belt when the pre-tensioner activates, the load limiter inside the pre-tensioner will release some of the pressure on the affected seat belt. (if equipped)

⚠ WARNING

- **Do not put anything near the buckle. Placing objects near the buckle can adversely affect the buckle pre-tensioner and may increase the risk of personal injury in the event of a collision.**
- **For your safety, be sure that the belt webbing is not loose or twisted and always sit properly on your seat.**

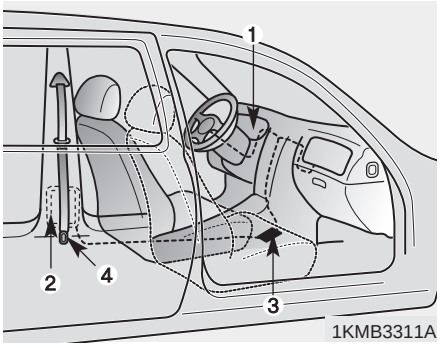

The seat belt pre-tensioner system consists mainly of the following components. Their locations are shown in the illustration:

1. SRS air bag warning light
2. Retractor pre-tensioner assembly
3. SRS control module
4. Anchor pre-tensioner assembly (if equipped)

⚠ WARNING

To obtain maximum benefit from a pre-tensioner seat belt:

1. **The seatbelt must be worn correctly and adjusted to the proper position. Please read and follow all of the important information and precautions about your vehicle's occupant safety features – including seat belts and air bags – that are provided in this manual.**
2. **Be sure you and your passengers always wear seat belts properly.**

تلفن شبانه روزی: ۰۲۱-۸۸۸۶۲۰۸۵
FarmaSOS.com

✻ NOTICE

- **Both the driver's and front passenger's pre-tensioner seat belts may be activated in certain frontal collisions.**
- **When the pre-tensioner seat belts are activated, a loud noise may be heard and fine dust, which may appear to be smoke, may be visible in the passenger compartment. These are normal operating conditions and are not hazardous.**
- **Although it is harmless, the fine dust may cause skin irritation and should not be breathed for prolonged periods. Wash all exposed skin areas thoroughly after an accident in which the pre-tensioner seat belts were activated.**

✻ NOTICE

Because the sensor that activates the SRS air bag is connected with the pre-tensioner seat belt, the SRS air bag warning light ( ) on the instrument panel will illuminate for approximately 6 seconds after the ignition switch has been turned to the ON position, and then it should turn off.

⚠ CAUTION

If the pre-tensioner seat belt does not work properly, this warning light will illuminate even if the SRS air bag has not malfunctioned. If the SRS air bag warning light does not illuminate when the ignition switch is turned ON, or if it remains illuminated after illuminating for approximately 6 seconds, or if it illuminates while the vehicle is being driven, please have an authorized KIA dealer inspect the pre-tensioner seat belt or SRS air bag system as soon as possible.

تلفن شبانه روزی: ۰۲۱-۸۸۸۶۲۰۸۵
FarmaSOS.com

⚠ WARNING

- **Pre-tensioners are designed to operate only one time. After activation, pre-tensioner seat belts must be replaced. All seat belts, of any type, should always be replaced after they have been worn during a collision.**
- **The pre-tensioner seat belt assembly mechanisms become hot during activation. Do not touch the pre-tensioner seat belt assemblies for several minutes after they have been activated.**
- **Do not attempt to inspect or replace the pre-tensioner seat belts yourself. This must be done by an authorized KIA dealer.**
- **Do not strike the pre-tensioner seat belt assemblies.**

(Continued)

(Continued)

- **Do not attempt to service or repair the pre-tensioner seat belt system in any manner.**
- **Do not put anything near the buckle. Placing objects near the buckle can adversely affect the buckle pretensioner and may increase the risk of personal injury in the event of a collision.**
- **Improper handling of the pre-tensioner seat belt assemblies, and failure to heed the warnings not to strike, modify, inspect, replace, service or repair the pre-tensioner seat belt assemblies may lead to improper operation or inadvertent activation and serious injury.**
- **Always wear the seat belts when driving or riding in a motor vehicle.**
- **If the vehicle or pre-tensioner seat belt must be discarded, contact an authorized KIA dealer.**

C020300AUN-EU

Seat belt precautions

⚠ WARNING

All occupants of the vehicle must wear their seat belts at all times. Seat belts and child restraints reduce the risk of serious or fatal injuries for all occupants in the event of a collision or sudden stop. Without a seat belt, occupants could be shifted too close to a deploying air bag, strike the interior structure or be thrown from the vehicle. Properly worn seat belts greatly reduce these hazards.

Even with advanced air bags, unbelted occupants can be severely injured by a deploying air bag.

Always follow the precautions about seat belts, air bags and occupant seat contained in this manual.

C020306AUN

Infant or small child

You should be aware of the specific requirements in your country. Child and/or infant seats must be properly placed and installed in the rear seat. For more information about the use of these restraints, refer to “Child restraint system” in this section.

⚠ WARNING

Every person in your vehicle needs to be properly restrained at all times, including infants and children. Never hold a child in your arms or lap when riding in a vehicle. The violent forces created during a crash will tear the child from your arms and throw the child against the interior. Always use a child restraint appropriate for your child's height and weight.

✻ NOTICE

Small children are best protected from injury in an accident when properly restrained in the rear seat by a child restraint system that meets the requirements of the safety standards of your country. Before buying any child restraint system, make sure that it has a label certifying that it meets the safety standards of your country. The restraint must be appropriate for your child's height and weight. Check the label on the child restraint for this information. Refer to "Child restraint system" in this section.

C020301AHM

Larger children

Children who are too large for child restraint systems should always occupy the rear seat and use the available lap/shoulder belts. The lap portion should be fastened and snugged on the hips and as low as possible. Check if the belt fits periodically. A child's squirming could put the belt out of position. Children are given the most safety in the event of an accident when they are restrained by a proper restraint system in the rear seat. If a larger child (over age 12) must be seated in the front seat, the child should be securely restrained by the available lap/shoulder belt and the seat should be placed in the rearmost position. Children age 12 and under should be restrained securely in the rear seat. NEVER place a child age 12 and under in the front seat. NEVER place a rear facing child seat in the front seat of a vehicle.

If the shoulder belt portion slightly touches the child's neck or face, try placing the child closer to the center of the vehicle. If the shoulder belt still touches their face or neck they need to be returned to a child restraint system.

⚠ WARNING - Shoulder belts on small children

- **Never allow a shoulder belt come in contact with a child's neck or face while the vehicle is in motion.**
- **If seat belts are not properly worn and adjusted on children, there is a risk of death or serious injury.**

FarmaSOS.com

C020302AKM

Restraint of pregnant women

Pregnant women should wear lap/shoulder belt assemblies whenever possible according to specific recommendations by their doctors. The lap portion of the belt should be worn AS SNUGLY AND LOW AS POSSIBLE.

⚠ WARNING - Pregnant women

Pregnant women must never place the lap portion of the safety belt over the area of the abdomen where the fetus is located or above the abdomen where the belt could crush the fetus during an impact.

C020303AUN

Injured person

A seat belt should be used when an injured person is being transported. When this is necessary, you should consult a physician for recommendations.

C020304AUN

One person per belt

Two people (including children) should never attempt to use a single seat belt. This could increase the severity of injuries in case of an accident.

C020305APB

Do not lie down

To reduce the chance of injuries in the event of an accident and to achieve maximum effectiveness of the restraint system, all passengers should be sitting up and the front seats should be in an upright position when the vehicle is moving. A seat belt cannot provide proper protection if the person is lying down in the rear seat or if the front seat is in a reclined position.

⚠ WARNING

Riding with a reclined seatback increases your chance of serious or fatal injuries in the event of a collision or sudden stop. The protection of your restraint system (seat belts and air bags) is greatly reduced by reclining your seat. Seat belts must be snugged against your hips and chest to work properly. The more the seatback is reclined, the greater the chance that an occupant's hips will slide under the lap belt causing serious internal injuries. Also, the shoulder belt may strike the occupant's neck. Drivers and passengers should always sit well back in their seats, properly belted, and with the seatbacks upright.

PersianOS.com

C020400AEN

Care of seat belts

Seat belt systems should never be disassembled or modified. In addition, care should be taken to assure that seat belts and belt hardware are not damaged by seat hinges, doors or other abuse.

⚠ WARNING

When you return the rear seatback to its upright position after the rear seatback has been folded down, be careful not to damage the seat belt webbing or buckle. Be sure that the webbing or buckle does not get caught or pinched in the rear seat. A seat belt with damaged webbing or buckle could fail during a collision or sudden stop, resulting in serious injury. If the webbing or buckles are damaged, get them replaced immediately.

C020401AEN

Periodic inspection

All seat belts should be inspected periodically for wear or damage of any kind. Any damaged parts should be replaced as soon as possible.

C020402AUN

Keep belts clean and dry

Seat belts should be kept clean and dry. If belts become dirty, they can be cleaned by using a mild soap solution and warm water. Bleach, dye, strong detergents or abrasives should not be used because they may damage and weaken the fabric.

تلفن شبانه روزی: ۰۲۱-۸۸۸۶۲۰۸۵
Farmasoft.com

C020403ASA

When to replace seat belts

The entire in-use seat belt assembly or assemblies should be replaced if the vehicle has been involved in an accident. This should be done even if no damage is visible. Additional questions concerning seat belt operation should be directed to an authorized KIA dealer.

CHILD RESTRAINT SYSTEM

C030000ATD-EC

Children riding in the car should sit in the rear seat and must always be properly restrained to minimize the risk of injury in an accident, sudden stop or sudden maneuver. According to accident statistics, children are safer when properly restrained in the rear seats than in the front seat. Larger children who are not in a child restraint should use one of the seat belts provided.

You should be aware of the specific requirements in your country. Child and/or infant safety seats must be properly placed and installed in the rear seat. You must use a commercially available child restraint system that meets the requirements of the Safety Standards of your country.

Child restraint systems are designed to be secured in vehicle seats by seat belt, or by a tether anchor and/or LATCH anchors (if equipped).

Children could be injured or killed in a crash if their restraints are not properly secured. For small children and babies, a child seat or infant seat must be used. Before buying a particular child restraint system, make sure it fits your vehicle seat and seat belts, and fits your child. Follow all the instructions provided by the manufacturer when installing the child restraint system.

⚠ WARNING

- **A child restraint system must be placed in the rear seat. Never install a child or infant seat on the front passenger's seat. Should an accident occur and cause the passenger-side air bag to deploy, it could severely injure or kill an infant or child seated in an infant or child seat. Thus only use a child restraint in the rear seat of your vehicle.**

(Continued)

(Continued)

- **A seat belt or child restraint system can become very hot if it is left in a closed vehicle on a sunny day, even if the outside temperature does not feel hot. Be sure to check the seat cover and buckles before placing a child there.**
- **When the child restraint system is not in use, store it in the luggage area or fasten it with a seat belt so that it will not be thrown forward in case of a sudden stop or an accident.**
- **Children may be seriously injured or killed by an inflating air bag. All children, even those too large for child restraints, must ride in the rear seat.**

امداد خودو فارما
FamiaSOS.com

⚠ WARNING

To reduce the chance or serious or fatal injuries:

- **Children of all ages are safer when restrained in the rear seat. A child riding in the front passenger seat can be forcefully struck by an inflating air bag resulting in serious or fatal injuries.**
- **Always follow the child restraint system manufacture's instructions for installation and use of the child restraint.**
- **Always make sure the child seat is secured properly in the vehicle and your child is securely restrained in the child seat.**
- **Never hold a child in your arms or lap when riding in a vehicle. The violent forces created during a crash will tear the child from your arms and throw the child against the vehicle's interior.**
- **Never put a seat belt over yourself and a child. During a crash, the belt could press deep into the child causing serious internal injuries.**

(Continued)

(Continued)

- **Never leave children unattended in a vehicle – not even for a short time. The car can heat up very quickly, resulting in serious injuries to children inside. Even very young children may inadvertently cause the vehicle to move, entangle themselves in the windows, or lock themselves or others inside the vehicle.**
- **Never allow two children, or any two persons, to use the same seat belt.**
- **Children often squirm and reposition themselves improperly. Never let a child ride with the shoulder belt under their arm or behind their back. Always properly position and secure children in rear seat.**
- **Never allow a child to stand-up or kneel on the seat or floorboard of a moving vehicle. During a collision or sudden stop, the child can be violently thrown against the vehicles interior, resulting in serious injury.**

(Continued)

(Continued)

- **Never use an infant carrier or a child safety seat that "hooks" over a seatback, it may not provide adequate security in an accident.**
- **Seat belts can become very hot, especially when the vehicle is parked in direct sunlight. Always check the seat belt buckles before fastening them over a child.**

FanTasOS.com

Rearward-facing child restraint system

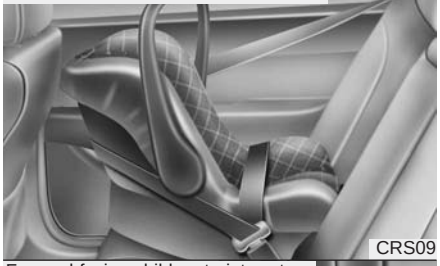

Forward-facing child restraint system

C030100AHM-EU

Using a child restraint system

For small children and babies, the use of a child seat or infant seat is required. This child seat or infant seat should be of appropriate size for the child and should be installed in accordance with the manufacturer's instructions.

For safety reasons, we recommend that the child restraint system be used in the rear seats.

⚠ WARNING

Never place a rear-facing child restraint in the front passenger seat, because of the danger that an inflating passenger-side air bag could impact the rear-facing child restraint and kill the child.

Since all passenger seat belts move freely under normal conditions and only lock under extreme or emergency conditions (emergency lock mode), you must manually change these seat belts to the auto lock mode to secure a child restraint.

تلفن شبانه روزی: ۰۲۱-۸۸۸۶۲۰۸۵
FarmaSOS.com

⚠ WARNING - Child seat installation

- **A child can be seriously injured or killed in a collision if the child restraint is not properly anchored to the car and the child is not properly restrained in the child restraint. Before installing the child restraint system, read the instructions supplied by the child restraint system manufacturer.**
- **If the seat belt does not operate as described in this section, have the system checked immediately by your authorized KIA dealer.**
- **Failure to observe this manual's instructions regarding child restraint system and the instructions provided with the child restraint system could increase the chance and/or severity of injury in an accident.**

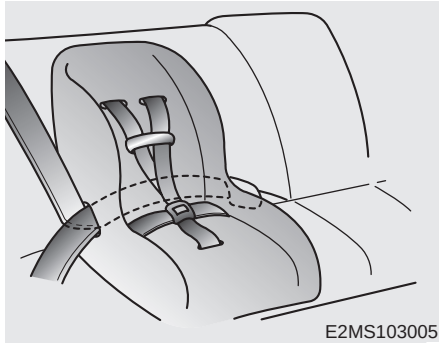
E2MS103005

C030102AAM-EU

Placing a passenger seat belt into the auto lock mode

The auto lock mode will help prevent the normal movement of the child in the vehicle from causing the seat belt to loosen and compromise the child restraint system. To secure a child restraint system, use the following procedure.

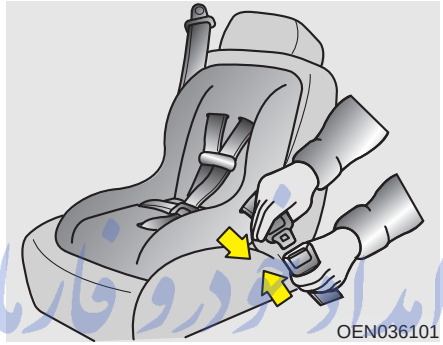
OEN036101

To install a child restraint system on the outboard or center rear seats, do the following:

1. Place the child restraint system in the seat and route the lap/shoulder belt around or through the restraint, following the restraint manufacturer's instructions. Be sure the seat belt webbing is not twisted.
2. Fasten the lap/shoulder belt latch into the buckle. Listen for the distinct "click" sound.

Position the release button so that it is easy to access in case of an emergency.

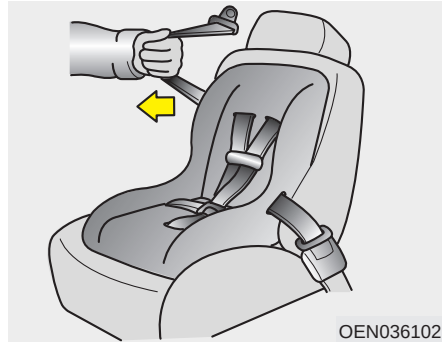
OEN036102

3. Pull the shoulder portion of the seat belt all the way out. When the shoulder portion of the seat belt is fully extended, it will shift the retractor to the "Auto Lock" (child restraint) mode.

FarmaSOS.com

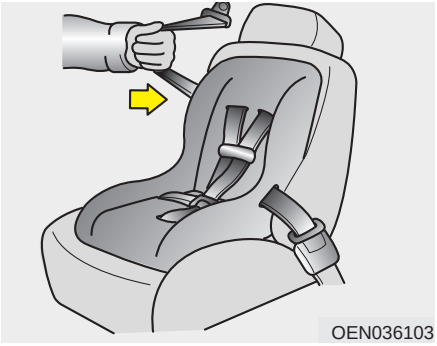
OEN036103

4. Slowly allow the shoulder portion of the seat belt to retract and listen for an audible “clicking” or “ratcheting” sound. This indicates that the retractor is in the “Auto Lock” mode. If no distinct sound is heard, repeat steps 3 and 4.

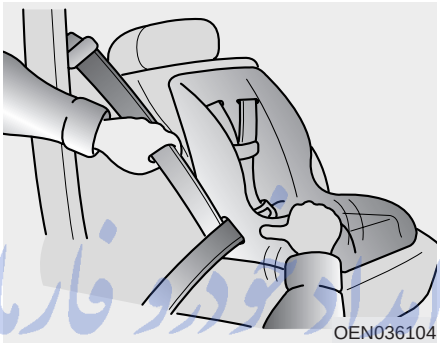
OEN036104

5. Remove as much slack from the belt as possible by pushing down on the child restraint system while feeding the shoulder belt back into the retractor.
6. Push and pull on the child restraint system to confirm that the seat belt is holding it firmly in place. If it is not, release the seat belt and repeat steps 2 through 6.
7. Double check that the retractor is in the “Auto Lock” mode by attempting to pull more of the seat belt out of the retractor. If you cannot, the retractor is in the “Auto Lock” mode.

To remove the child restraint, press the release button on the buckle and then pull the lap/shoulder belt out of the restraint and allow the seat belt to retract fully.

⚠ WARNING - Auto lock mode

The lap/shoulder belt automatically returns to the “emergency lock mode” whenever the belt is allowed to retract fully. Therefore, the preceding seven steps must be followed each time a child restraint is installed.

If the retractor is not in the Automatic Locking mode, the child restraint can move when your vehicle turns or stops suddenly. A child can be seriously injured or killed if the child restraint is not properly anchored to the car, including setting the retractor to the Automatic Locking mode.

When the seat belt is allowed to retract to its fully stowed position, the retractor will automatically switch from the “Auto Lock” mode to the emergency lock mode for normal adult usage.

ایران خودرو فارما
FarmaSOS.com

C030103ATD

Securing a child restraint seat with tether anchorage system (if equipped)

Child restraint hook holders are located on the shelf behind the rear seats.

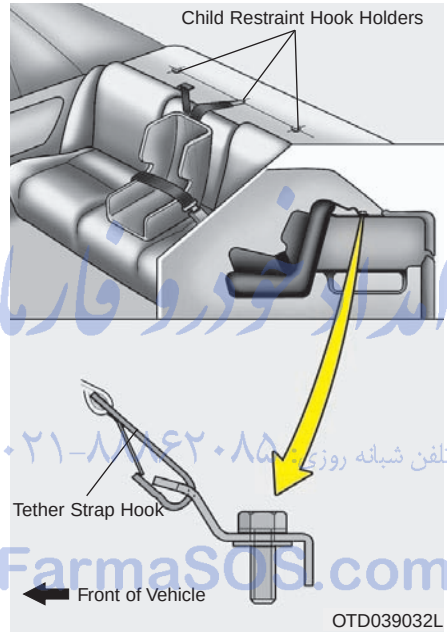

1. Route the child restraint seat strap over the seatback.

   For vehicles with adjustable headrest, route the tether strap under the headrest and between the headrest posts, otherwise route the tether strap over the top of the seatback.

2. Connect the tether strap hook to the appropriate child restraint hook holder and tighten to secure the child restraint seat.

⚠ WARNING

A child can be seriously injured or killed in a collision if the child restraint is not properly anchored to the car and the child is not properly restrained in the child restraint. Always follow the child seat manufacturer's instructions for installation and use.

⚠ WARNING - Tether strap

Never mount more than one child restraint to a single tether or to a single lower anchorage point. The increased load caused by multiple seats may cause the tethers or anchorage points to break, causing serious injury or death.

تلفن شبانه روزی: ۰۲۱-۸۷۷۴۲۰۸۵
FarmaSOS.com

⚠ WARNING - Child restraint check

Check that the child restraint system is secure by pushing and pulling it in different directions. Incorrectly fitted child restraints may swing, twist, tip or separate causing death or serious injury.

⚠ WARNING - Child restraint anchorage

- **Child restraint anchorages are designed to withstand only those loads imposed by correctly fitted child restraints. Under no circumstances are they to be used for adult seat belts or harnesses or for attaching other items or equipment to the vehicle.**
- **The tether strap may not work properly if attached somewhere other than the correct tether anchor.**

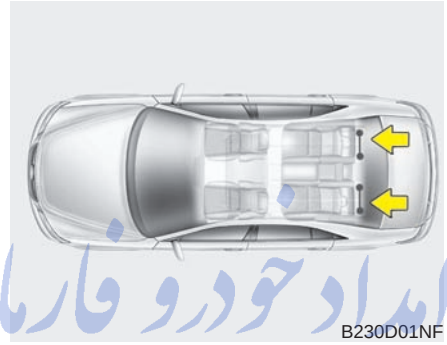

C030104AHM-EU

Securing a child restraint seat with child seat lower anchor system

Some child seat manufacturers make child restraint seats that are labeled as LATCH or LATCH-compatible child restraint seats. LATCH stands for "Lower Anchors and Tethers for Children". These seats include two rigid or webbing mounted attachments that connect to two LATCH anchors at specific seating positions in your vehicle. This type of child restraint seat eliminates the need to use seat belts to attach the child seat in the rear seats.

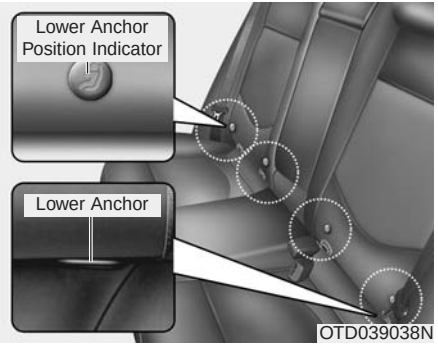

Child restraint symbols are located on the left and right rear seat backs to indicate the position of the lower anchors for child restraints.

⚠ WARNING

When using the vehicle's "LATCH" system to install a child restraint system in the rear seat, all unused vehicle rear seat belt metal latch plates or tabs must be latched securely in their seat belt buckles and the seat belt webbing must be retracted behind the child restraint to prevent the child from reaching and taking hold of unretracted seat belts. Unlatched metal latch plates or tabs may allow the child to reach the unretracted seat belts which may result in strangulation and a serious injury or death to the child in the child restraint.

⚠ WARNING

Install the child restraint seat fully rearward against the seatback with the seatback reclined two positions from the most upright latched position.

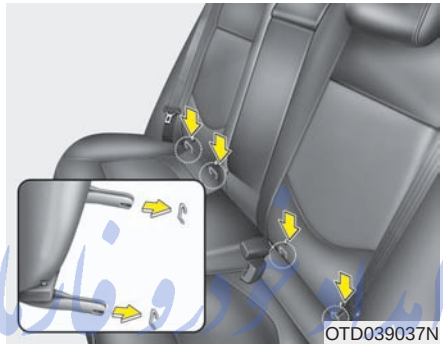

LATCH anchors have been provided in your vehicle. The LATCH anchors are located in the left and right outboard rear seating positions. Their locations are shown in the illustration. There is no LATCH anchor provided for the center rear seating position.

The LATCH anchors are located between the seatback and the seat cushion of the rear seat left and right outboard seating positions.

Follow the child seat manufacturer's instructions to properly install child restraint seats with LATCH or LATCH-compatible attachments.

Once you have installed the LATCH child restraint, assure that the seat is properly attached to the LATCH and tether anchors.

Also, test the child restraint seat before you place the child in it. Tilt the seat from side to side. Also try to tug the seat forward. Check to see if the anchors hold the seat in place.

⚠ CAUTION

Do not allow the rear seat belt webbing to get scratched or pinched by the child-seat latch and LATCH anchor during installation.

⚠ WARNING

If the child restraint is not anchored properly, the risk of a child being seriously injured or killed in a collision greatly increases.

⚠ WARNING - LATCH lower anchors

LATCH lower anchors are only to be used with the left and right rear outboard seating positions. Never attempt to attach a LATCH equipped seat in the center seating position. You may damage the anchors or the anchors may fail and break in a collision.

AIR BAG - ADVANCED SUPPLEMENTAL RESTRAINT SYSTEM

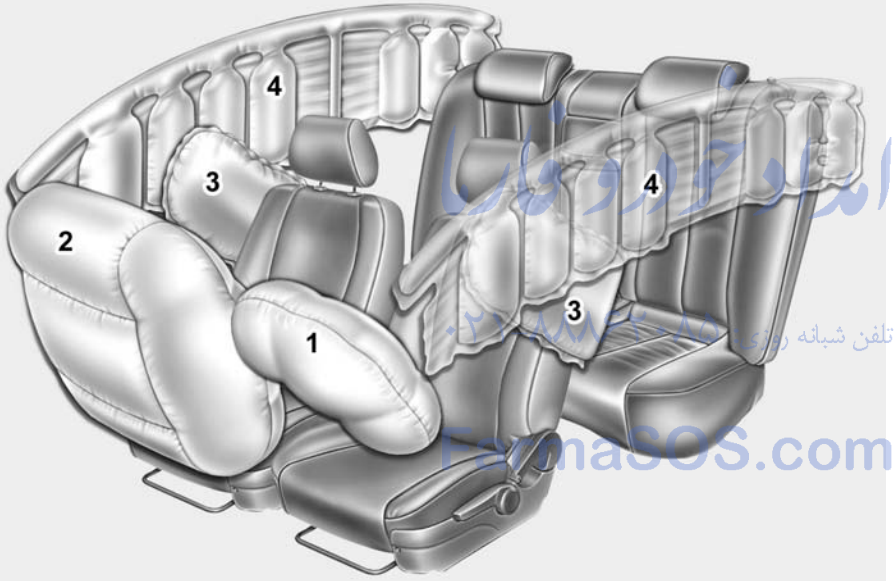

* The actual air bags in the vehicle may differ from the illustration.

OMG039025

C040000AUN-C1

(1) Driver's front air bag
(2) Passenger's front air bag
(3) Side impact air bag*
(4) Curtain air bag*
* : if equipped

⚠ WARNING

Even in vehicles with air bags, you and your passengers must always wear the safety belts provided in order to minimize the risk and severity of injury in the event of a collision or rollover.

FarmaSOS.com

C040900ATD

How does the air bag system operate

- Air bags are activated (able to inflate if necessary) only when the ignition switch is turned to the ON or START position.
- Air bags inflate instantly in the event of serious frontal or side collision (if equipped with side air bag or curtain air bag) in order to help protect the occupants from serious physical injury.
- There is no single speed at which the air bags will inflate.

  Generally, air bags are designed to inflate based upon the severity of a collision and its direction. These two factors determine whether the sensors produce an electronic deployment/ inflation signal.
- Air bag deployment depends on a number of complex factors including vehicle speed, angles of impact and the density and stiffness of the vehicles or objects which your vehicle hits in the collision. The determining, factors are not limited to those mentioned above.
- The front air bags will completely inflate and deflate in an instant.

  It is virtually impossible for you to see the air bags inflate during an accident. It is much more likely that you will simply see the deflated air bags hanging out of their storage compartments after the collision.
- In order to help provide protection in a severe collision, the air bags must inflate rapidly. The speed of air bag inflation is a consequence of extremely short time in which a collision occurs and the need to get the air bag between the occupant and the vehicle structures before the occupant impacts those structures. This speed of inflation reduces the risk of serious or life-threatening injuries in a severe collision and is thus a necessary part of air bag design.

  However, air bag inflation can also cause injuries which can include facial abrasions, bruises and broken bones because the inflation speed also causes the air bags to expand with a great deal of force.
- **There are even circumstances under which contact with the steering wheel air bag can cause fatal injuries, especially if the occupant is positioned excessively close to the steering wheel.**

⚠ WARNING

- **To avoid severe personal injury or death caused by deploying air bags in a collision, the driver should sit as far back from the steering wheel air bag as possible (at least 250 mm (10 inches) away). The front passenger should always move their seat as far back as possible and sit back in their seat.**
- **Air bags inflate instantly in an event of a collision, passengers may be injured by the air bag expansion force if they are not in a proper position.**
- **Air bag inflation may cause injuries including facial or bodily abrasions, injuries from broken glasses or burns.**

Farmasod.com

C040902APB

Noise and smoke

When the air bags inflate, they make a loud noise and they leave smoke and powder in the air inside of the vehicle. This is normal and is a result of the ignition of the air bag inflator. After the air bag inflates, you may feel substantial discomfort in breathing due to the contact of your chest to both the seat belt and the air bag, as well as from breathing the smoke and powder. **Open your doors and/or windows as soon as possible after the impact in order to reduce discomfort and prevent prolonged exposure to smoke and powder.**

Though smoke and powder are non-toxic, it may cause irritation to the skin (eyes, nose and throat etc). If this is the case, wash and rinse with the cold water immediately and consult the doctor if the symptom persists.

⚠ WARNING

When the air bags deploy, the air bag related parts in the steering wheel and/or instrument panel and/or in both sides of the roof rails above the front and rear doors are very hot. To prevent injury, do not touch the air bag storage area's internal components immediately after an air bag has inflated.

امداد خودرو فارما
تلفن شبانه روزی: ۰۲۱-۸۸۸۶۲۰۸۵
FarmaSOS.com

1JBH3051

C040903AUN

Installing a child restraint on a front passenger's seat is forbidden

Never place a rear-facing child restraint in the front passenger's seat. If the air bag deploys, it would impact the rear-facing child restraint, causing serious or fatal injury.

In addition, do not place front-facing child restraint in the front passenger's seat either. If the front passenger air bag inflates, it would cause serious or fatal injuries to the child.

⚠ WARNING

- **Extreme Hazard! Do not use a rearward facing child restraint on a seat protected by an air bag in front of it!**
- **Never put a child restraint in the front passenger's seat. If the front passenger air bag inflates, it can cause serious or fatal injuries.**
- **When children are seated in the rear outboard seats of a vehicle equipped with side and/or curtain air bags, be sure to install the child restraint system as far away from the door side as possible, and securely lock the child restraint system in position.**

  Inflation of side and/or curtain air bags could cause serious injury or death to an infant or child.

C041000AEN

Air bag warning light

The purpose of the air bag warning light in your instrument panel is to alert you of a potential problem with your air bag - Supplemental Restraint System (SRS).

When the ignition switch is turned ON, the indicator light should illuminate for approximately 6 seconds, then go off.

Have the system checked if:

- The light does not turn on briefly when you turn the ignition ON.
- The light stays on after illuminating for approximately 6 seconds.
- The light comes on while the vehicle is in motion.

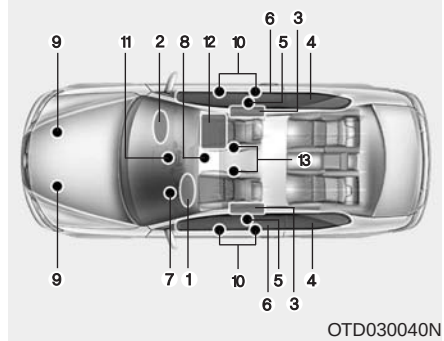

C040100BTD-EU

SRS components and functions

The SRS consists of the following components:

1. Driver's front air bag module
2. Passenger's front air bag module
3. Side impact air bag modules*
4. Curtain air bag modules*
5. Retractor pre-tensioner assemblies*
6. Anchor pre-tensioner assemblies*
7. Air bag warning light
8. SRS control module (SRSCM)
9. Front impact sensors
10. Side impact sensors*
11. PASSENGER AIR BAG "OFF" indicator (Front passenger's seat only)
12. Occupant detection system (Front passenger's seat only)

13. Driver's and front passenger's seat belt buckle sensors

*: if equipped

The SRSCM continually monitors all SRS components while the ignition switch is ON to determine if a crash impact is severe enough to require air bag deployment or pre-tensioner seat belt deployment.

The SRS air bag warning light on the instrument panel will illuminate for about 6 seconds after the ignition switch is turned to the ON position, after which the air bag warning light should go out.

⚠ WARNING

If any of the following conditions occurs, this indicates a malfunction of the SRS. Have an authorized KIA dealer inspect the air bag system as soon as possible.

- **The light does not turn on briefly when you turn the ignition ON.**
- **The light stays on after illuminating for approximately 6 seconds.**
- **The light comes on while the vehicle is in motion.**

Driver's front air bag (1)

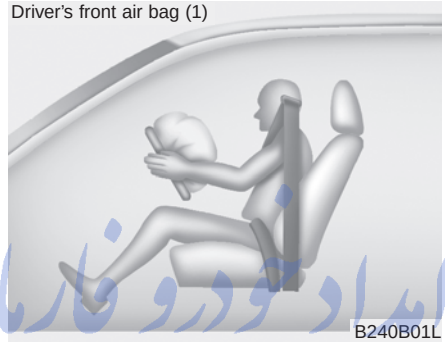

B240B01L

The air bag modules are located both in the center of the steering wheel and in the front passenger's panel above the glove box. When the SRSCM detects a sufficiently severe impact to the front of the vehicle, it will automatically deploy the front air bags.

Driver's front air bag (2)

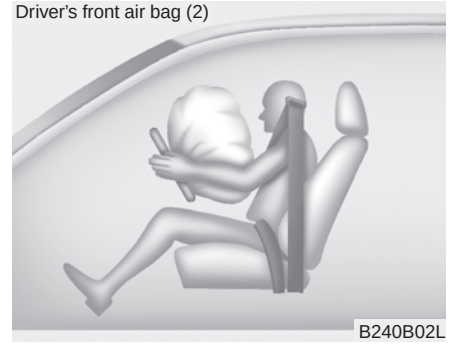

B240B02L

Upon deployment, tear seams molded directly into the pad covers will separate under pressure from the expansion of the air bags. Further opening of the covers then allows full inflation of the air bags.

FarmaSOS.com

Driver's front air bag (3)

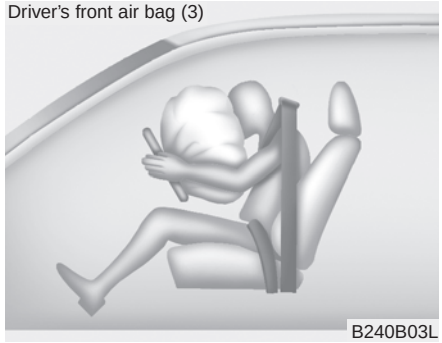

A fully inflated air bag, in combination with a properly worn seat belt, slows the driver's or the passenger's forward motion, reducing the risk of head and chest injury.

After complete inflation, the air bag immediately starts deflating, enabling the driver to maintain forward visibility and the ability to steer or operate other controls.

Passenger's front air bag

⚠ WARNING

- **Do not install or place any accessories (drink holder, cassette holder, sticker, etc.) on the front passenger's panel above the glove box in a vehicle with a passenger's air bag. Such objects may become dangerous projectiles and cause injury if the passenger's air bag inflates.**

(Continued)

(Continued)

- **When installing a container of liquid air freshener inside the vehicle, do not place it near the instrument cluster nor on the instrument panel surface.**

  It may become dangerous projectiles and cause injury if the passenger's air bag inflates.

FarmaSOS.com

⚠ WARNING

- **If an air bag deploys, there may be a loud noise followed by a fine dust released in the vehicle. These conditions are normal and are not hazardous - the air bags are packed in this fine powder. The dust generated during air bag deployment may cause skin or eye irritation as well as aggravate asthma for some persons. Always wash all exposed skin areas thoroughly with lukewarm water and a mild soap after an accident in which the air bags were deployed.**

(Continued)

(Continued)

- **The SRS can function only when the ignition key is in the ON position. If the SRS air bag warning light does not illuminate, or continuously remains on after illuminating for about 6 seconds when the ignition switch is turned to the ON position, or after the engine is started, comes on while driving, the SRS is not working properly. If this occurs, have your vehicle immediately inspected by an authorized KIA dealer.**
- **Before you replace a fuse or disconnect a battery terminal, turn the ignition switch to the LOCK position and remove the ignition key. Never remove or replace the air bag related fuse(s) when the ignition switch is in the ON position. Failure to heed this warning will cause the SRS air bag warning light to illuminate.**

OTD031041N

C040300ATD

Occupant detection system

Your vehicle is equipped with an occupant detection system in the front passenger's seat.

The occupant detection system is designed to detect the presence of a properly-seated front passenger and determine if the passenger's front air bag should be enabled (may inflate) or not. The driver's front air bag is not affected or controlled by the occupant detection system.

Main components of occupant detection system

- A detection device located within the front passenger seat track.
- Electronic system to determine whether passenger air bag systems should be activated or deactivated.
- A indicator light located on the instrument panel which illuminates the words PASSENGER AIR BAG “OFF” indicating the front passenger air bag system is deactivated.
- The instrument panel air bag warning light is interconnected with the occupant detection system.

If the front passenger seat is occupied by a person that the system determines to be of adult size, and he/she sits properly (sitting upright with the seatback in an upright position, centered on the seat cushion with their seat belt on, legs comfortably extended and their feet on the floor), the PASSENGER AIR BAG “OFF” indicator will turn off and the front passenger's air bag will be able to inflate, if necessary, in frontal crashes.

You will find the PASSENGER AIR BAG “OFF” indicator on the center facia panel.

This system detects the conditions 1~4 in the following table and activates or deactivates the front passenger air bag based on these conditions.

تلفن شبانه روزی: ۰۲۱-۸۸۸۶۱۰۸۵
FarmaSOS.com

Always be sure that you and all vehicle occupants are seated and restrained properly (sitting upright with the seat in an upright position, centered on the seat cushion, with the person’s legs comfortably extended, feet on the floor, and wearing the safety belt properly) for the most effective protection by the air bag and the safety belt.

- The ODS (Occupant Detection System) may not function properly if the passenger takes actions which can defeat the detection system. These include:

(1) Failing to sit in an upright position.
(2) Leaning against the door or center console.
(3) Sitting towards the sides or the front of the seat.
(4) Putting legs on the dashboard or resting them on other locations which reduce the passenger weight on the front seat.
(5) Improperly wearing the safety belt.
(6) Reclining the seat back.

C040301ATD

Condition and operation in the front passenger occupant detection system

Condition detected by the occupant detection system	Indicator/Warning light		Devices
	PASSENGER AIR BAG “OFF” indicator light	SRS warning light	Front passenger air bag
1. Adult *1 or child age 13 and up*2	Off	Off	Activated
2. Infant or child restraint system with 12 months old*3 *4	On	Off	Deactivated
3. Unoccupied	On	Off	Deactivated
4. Malfunction in the system	Off	On	Activated

*1) The system judges a person of adult size as an adult. When a smaller adult sits in the front passenger seat, the system may recognize him/her as a child depending on his/her physique and posture.

*2) Do not allow children to ride in the front passenger seat. When a smaller child than the same age sits in the front passenger seat, the system may recognize him/her as an infant depending on his/her physique or posture.

*3) Never install a child restraint system on the front passenger seat.

*4) The PASSENGER AIR BAG "OFF" indicator may turn on or off when a child above 12 months to 12 years old (with or without child restraint system) sits in the front passenger seat. This is a normal condition.

امداد خودرو فارما
تلفن شبانه روزی: ۰۲۱-۸۸۸۶۱۰۸۵
FarmaSOS.com

⚠ WARNING

Riding in an improper position or placing weight on the front passenger's seat when it is unoccupied by a passenger adversely affects the occupant detection system (ODS).

(Continued)

(Continued)

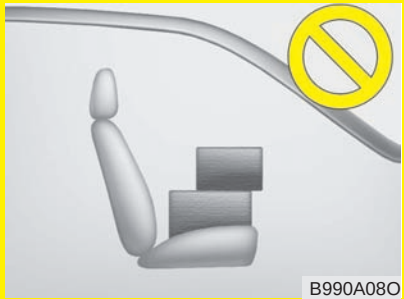

- **Never put a heavy load in the front passenger seat.**

- **Never sit with the hips shifted towards the front of the seat.**

- **Never place the feet on the dash-board.**

- **Never place the feet on the front passenger seatback.**

- **Never excessively recline the front passenger seatback.**

- **Never lean on the door or center console.**
- **Never sit on one side of the front passenger seat.**

امداد خودرو فارما
تلفن پشتیبانی: ۰۲۱ ۸۸۸۶۲۰۸۵
FarmaSOS.com

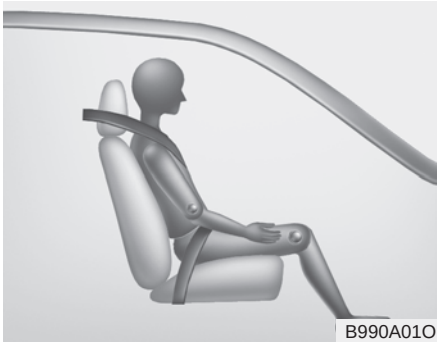
B990A01O

When an adult is seated in the front passenger seat, if the PASSENGER AIR BAG “OFF” indicator is on, turn the ignition switch to the LOCK position and ask the passenger to sit properly (sitting upright with the seat back in an upright position, centered on the seat cushion with their seat belt on, legs comfortably extended and their feet on the floor). Restart the engine and have the person remain in that position. This will allow the system to detect the person and to enable the passenger air bag.

If the PASSENGER AIR BAG “OFF” indicator is still on, ask the passenger to move to the rear seat.

⚠ WARNING

Do not allow an adult passenger to ride in the front seat when the PASSENGER AIR BAG “OFF” indicator is illuminated, because the air bag will not deploy in the event of a crash. If the PASSENGER AIR BAG “OFF” indicator remains illuminated after the passenger repositions themselves properly and the car is restarted, it is recommended that passenger move to the rear seat because the passenger's front air bag will not deploy.

Front seat passengers must stay properly seated to avoid serious injury from a deploying air bag.

✻ NOTICE

The PASSENGER AIR BAG “OFF” indicator illuminates for about 4 seconds after the ignition switch is turned to the ON position or after the engine is started. If the front passenger seat is occupied, the occupant detection sensor will then classify the front passenger after several more seconds.

⚠ WARNING

Do not put a heavy load in the front passenger seat. Do not place any items under the front passenger seat. Any of these could interfere with proper sensor operation.

FarmaOOS.com

⚠ WARNING

- Even though your vehicle is equipped with the occupant detection system, never install a child restraint system in the front passenger's seat. A deploying air bag can forcefully strike a child resulting in serious injuries or death. Any child age 12 and under should ride in the rear seat. Children too large for child restraints should use the available lap/shoulder belts. No matter what type of crash, children of all ages are safer when restrained in the rear seat.
- If the PASSENGER AIR BAG "OFF" indicator is illuminated when the front passenger's seat is occupied by an adult and he/she sits properly (sitting upright with the seatback in an upright position, centered on the seat cushion with their seat belt on, legs comfortably extended and their feet on the floor), have that person sit in the rear seat.

(Continued)

(Continued)

- If you change the weight on the front passenger seat, the PASSENGER AIR BAG "OFF" indicator may turn on or off for a few seconds, disabling or enabling the passenger air bag.
- Do not modify or replace the front passenger seat. Don't place anything on or attach anything such as a blanket or after market seat heater to the front passenger seat. This can adversely affect the occupant detection system.
- Do not sit on sharp objects such as tools when occupying the front passenger seat. This can adversely affect the occupant detection system.
- Do not use accessory seat covers on the front seats.
- Accident statistics show that children are safer if they are restrained in the rear, as opposed to the front seat. It is recommended that child restraints be secured in a rear seat, including an infant riding in a rear-facing infant seat, a child riding in a forward-facing child seat and an older child riding in a booster seat.

(Continued)

(Continued)

- Air bags can only be used once – have an authorized KIA dealer replace the air bag immediately after deployment.
- A smaller-stature adult who is not seated correctly (for example: seat excessively reclined, leaning on the door or center console, or hips shifted forward in the seat) can cause a condition where the advanced frontal air bag system senses less weight than if the occupant were seated properly (sitting upright with the seatback in an upright position, centered on the seat cushion with their seat belt on, legs comfortably extended and their feet on the floor).

  This condition can result in an adult potentially being misclassified and illumination of the PASSENGER AIR BAG "OFF" indicator.

⚠ WARNING

If the occupant detection system is not working properly, the SRS air bag warning light on the instrument panel will illuminate because the passenger's front air bag is connected with the occupant detection system. If there is a malfunction of the occupant detection system, the PASSENGER AIR BAG "OFF" indicator will not illuminate and the passenger's front air bag will inflate in frontal impact crashes even if there is no occupant in the front passenger's seat. If the SRS air bag warning light does not illuminate when the ignition switch is turned to the ON position, remains illuminated after approximately 6 seconds when the ignition switch is turned to the ON position, or if it illuminates while the vehicle is being driven, have an authorized KIA dealer inspect the occupant detection system and the SRS air bag system as soon as possible.

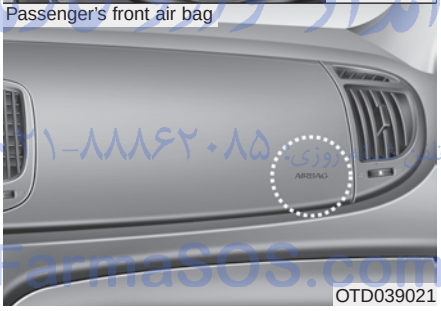

C040400AAM-EU

Driver's and passenger's front air bag

Your vehicle is equipped with an Advanced Supplemental Restraint (Air Bag) System and lap/shoulder belts at both the driver and passenger seating position.

The indications of the system's presence are the letters "AIR BAG" embossed on the air bag pad cover in the steering wheel and the passenger's side front panel pad above the glove box.

The SRS consists of air bags installed under the pad covers in the center of the steering wheel and the passenger's side front panel above the glove box.

The purpose of the SRS is to provide the vehicle's driver and/or the front passenger with additional protection than that offered by the seat belt system alone in case of a frontal impact of sufficient severity. The SRS uses sensors to gather information about the driver's seat position, the driver's and front passenger's seat belt usage and impact severity.

FarmaSOS.com

⚠ WARNING

If a seat track position sensor (if equipped) or an occupant detection system is not working properly, the SRS air bag warning light on the instrument panel will illuminate because the SRS air bag warning light is connected with the seat track position sensor and the occupant detection system. If the SRS air bag warning light does not illuminate when the ignition switch is turned to the ON position, remains illuminated after approximately 6 seconds when the ignition switch is turned to the ON position, or if it illuminates while the vehicle is being driven, have an authorized KIA dealer inspect the advanced SRS air bag system as soon as possible.

The driver's seat track position sensor (if equipped), which is installed on the seat track, determine if the seat is fore or aft of a reference position. The seat belt buckle sensors determine if the driver and front passenger's seat belts are fastened.

These sensors provide the ability to control the SRS deployment based on how close the driver's seat is to the steering wheel, whether or not the seat belts are fastened, and how severe the impact is.

The advanced SRS offers the ability to control the air bag inflation with two levels. A first stage level is provided for moderate-severity impacts. A second stage level is provided for more severe impacts.

The passenger's front air bag is designed to help reduce the injury of children sitting close to the instrument panel in low speed collisions. However, children are safer if they are restraint in the rear seat.

According to the impact severity, seating position and seat belt usage, the SRSCM (SRS Control Module) controls the air bag inflation. Failure to properly wear seat belts can increase the risk or severity of injury in an accident.

Additionally, your vehicle is equipped with an occupant detection system in the front passenger's seat. The occupant detection system detects the presence of a passenger in the front passenger's seat and will turn off the front passenger's air bag under certain conditions. For more detail, see "Occupant detection system" in this section.

⚠ WARNING

- **Modification to the seat structure can adversely affect the seat track position sensor (if equipped) and cause the air bag to deploy at a different level than should be provided.**
- **Do not place any objects underneath the front seats as they could damage the seat track position sensor or interfere with the occupant detection system.**
- **Do not place any objects that may cause magnetic fields near the front seat. These may cause a malfunction of the seat track position sensor.**

امداد خودرو فارما
تنش شبانه روزی: ۸۸۸۶۲۸۵۰-۰۲۱
FarmaSOS.com

⚠ WARNING

Manufacturers are required by government regulations to provide a contact point concerning modifications to the vehicle for persons with disabilities, which modifications may affect the vehicle's advanced air bag system. However, KIA does not endorse nor will it support any changes to any part or structure of the vehicle that could affect the advanced air bag system, including the occupant detection system.

Specifically, the front passenger seat, dashboard or door should not be replaced except by an authorized KIA dealer using original KIA parts designed for this vehicle and model. Any other such replacement or modification could adversely affect the operation of the occupant detection system and your advanced air bags. For the same reason, do not attach anything to the seat, dashboard or door, even temporarily. If the system is adversely affected, it could cause severe personal injuries or death in a collision.

✻ NOTICE

- Be sure to read information about the SRS on the labels provided on the sun visor.
- Advanced air bags are combined with pre-tensioner seat belts to help provide enhanced occupant protection in frontal crashes. Front air bags are not intended to deploy in collisions in which sufficient protection can be provided by the pre-tensioner seat belt alone.

⚠ WARNING

Always use seat belts and child restraints – every trip, every time, everyone! Air bags inflate with considerable force and in the blink of an eye. Seat belts help keep occupants in proper position to obtain maximum benefit from the air bag. Even with advanced air bags, improperly and unbelted occupants can be severely injured when the air bag inflates. Always follow the precautions about seat belts, air bags and occupant safety contained in this manual.

To reduce the chance of serious or fatal injuries and receive the maximum safety benefit from your restraint system:

(Continued)

(Continued)

- **Never place a child in any child or booster seat in the front seat.**
- **ABC – Always Buckle Children in the back seat. It is the safest place for children of any age to ride.**
- **Front and side air bags can injure occupants improperly positioned in the front seats.**
- **Move your seat as far back as practical from the front air bags, while still maintaining control of the vehicle.**
- **You and your passengers should never sit or lean unnecessarily close to the air bags. Improperly positioned drivers and passengers can be severely injured by inflating air bags.**
- **Never lean against the door or center console – always sit in an upright position.**
- **Do not allow a passenger to ride in the front seat when the PASSENGER AIR BAG "OFF" indicator is illuminated, because the air bag will not deploy in the event of a moderate or severe frontal crash.**

(Continued)

(Continued)

- **No objects should be placed over or near the air bag modules on the steering wheel, instrument panel, and the front passenger's panel above the glove box, because any such object could cause harm if the vehicle is in a crash severe enough to cause the air bags to deploy.**
- **Never place covers, blankets or aftermarket seat warmers on the passenger seat as these may interfere with the occupant detection system.**
- **Do not tamper with or disconnect SRS wiring or other components of the SRS system. Doing so could result in injury, due to accidental deployment of the air bags or by rendering the SRS inoperative.**

(Continued)

(Continued)

- **If the SRS air bag warning light remains illuminated while the vehicle is being driven, have an authorized KIA dealer inspect the air bag system as soon as possible.**
- **Air bags can only be used once – have an authorized KIA dealer replace the air bag immediately after deployment.**
- **The SRS is designed to deploy the front air bags only when an impact is sufficiently severe and when the impact angle is less than 30° from the forward longitudinal axis of the vehicle. Additionally, the air bags will only deploy once. Seat belts must be worn at all times.**
- **Front air bags are not intended to deploy in side-impact, rear-impact or rollover crashes. In addition, front air bags will not deploy in frontal crashes below the deployment threshold.**

(Continued)

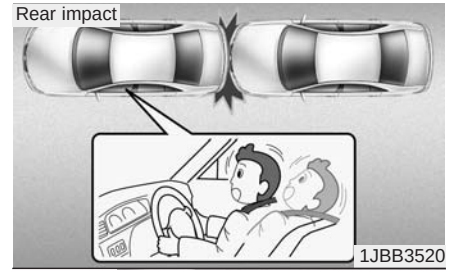

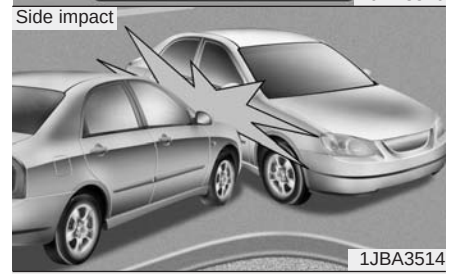

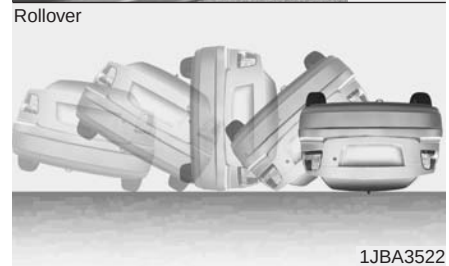

(Continued)

- **Even though your vehicle is equipped with the occupant detection system, do not install a child restraint system in the front passenger seat position. A child restraint system must never be placed in the front seat. The infant or child could be severely injured or killed by an air bag deployment in case of an accident.**
- **Children age 12 and under must always be properly restrained in the rear seat. Never allow children to ride in the front passenger seat. If a child over 12 must be seated in the front seat, he or she must be properly belted and the seat should be moved as far back as possible.**
- **For maximum safety protection in all types of crashes, all occupants including the driver should always wear their seat belts whether or not an air bag is also provided at their seating position to minimize the risk of severe injury or death in the event of a crash. Do not sit or lean unnecessarily close to the air bag while the vehicle is in motion.**

(Continued)

(Continued)

- **Sitting improperly or out of position can result in serious or fatal injury in a crash. All occupants should sit upright with the seat back in an upright position, centered on the seat cushion with their seat belt on, legs comfortably extended and their feet on the floor until the vehicle is parked and the ignition key is removed.**
- **The SRS air bag system must deploy very rapidly to provide protection in a crash. If an occupant is out of position because of not wearing a seat belt, the air bag may forcefully contact the occupant causing serious or fatal injuries.**

FarmaSOS.com

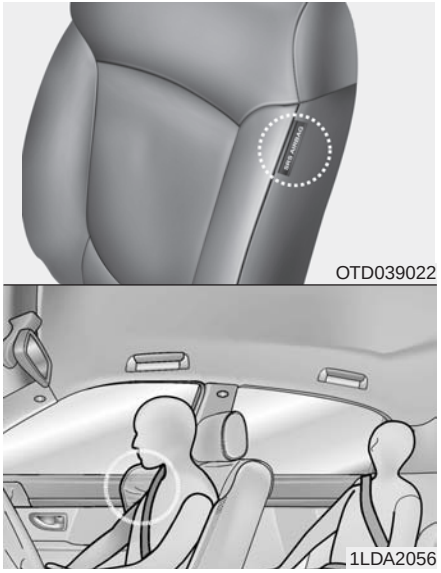

C040600ATD-EC

Side impact air bag (if equipped)

Your vehicle is equipped with a side impact air bag in each front seat. The purpose of the air bag is to provide the vehicle's driver and/or the front passenger with additional protection than that offered by the seat belt alone.

The side impact air bags are designed to deploy only during certain side-impact collisions, depending on the crash severity, angle, speed and point of impact. The side air bags are not designed to deploy in all side impact situations.

⚠ WARNING

- **The side impact air bag is supplemental to the driver's and the passenger's seat belt systems and is not a substitute for them. Therefore your seat belts must be worn at all times while the vehicle is in motion. The air bags deploy only in certain side impact conditions severe enough to cause significant injury to the vehicle occupants.**
- **For best protection from the side impact air bag system and to avoid being injured by the deploying side impact air bag, both front seat occupants should sit in an upright position with the seat belt properly fastened. The driver's hands should be placed on the steering wheel at 9:00 and 3:00 positions. The passenger's arms and hands should be placed on their laps.**

(Continued)

(Continued)

- **Do not use any accessory seat covers.**
- **Use of seat covers could reduce or prevent the effectiveness of the system.**
- **Do not install any accessories on the side or near the side impact air bag.**
- **Do not place any objects over the air bag or between the air bag and yourself.**
- **Do not place any objects (an umbrella, bag, etc.) between the front door and the front seat. Such objects may become dangerous projectiles and cause injury if the supplemental side air bag inflates.**
- **To prevent unexpected deployment of the side impact air bag that may result in personal injury, avoid impact to the side impact sensor when the ignition switch is on.**

(Continued)

(Continued)

- **If the seat or seat cover is damaged, have the vehicle checked and repaired by an authorized KIA dealer. Inform that your vehicle is equipped with side impact air bags.**

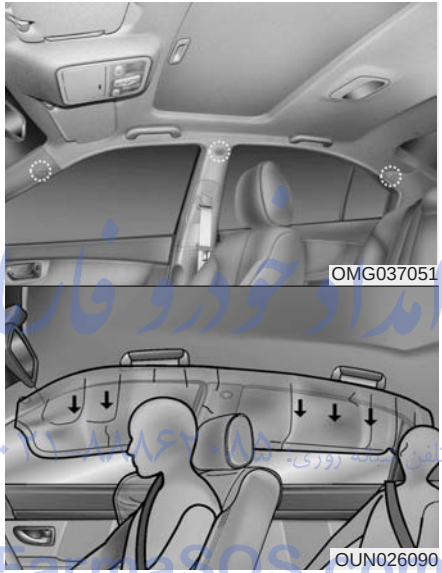

C040700AUN

Curtain air bag (if equipped)

Curtain air bags are located along both sides of the roof rails above the front and rear doors.

They are designed to help protect the heads of the front seat occupants and the rear outboard seat occupants in certain side impact collisions.

The curtain air bags are designed to deploy only during certain side impact collisions, depending on the crash severity, angle, speed and impact. The curtain air bags are not designed to deploy in all side impact situations, collisions from the front or rear of the vehicle or in most rollover situations.

امداد خودرو فارس
تلفن شبانه روزی: ۸۵-۸۶۷۰۸۵
FarmaSOS.com

⚠ WARNING

- **In order for side and curtain air bags to provide its best protection, both front seat occupants and both outboard rear occupants should sit in an upright position with the seat belts properly fastened. Importantly, children should sit in a proper child restraint system in the rear seat.**
- **When children are seated in the rear outboard seats, they must be seated in the proper child restraint system. Make sure to put the child restraint system as far away from the door side as possible, and secure the child restraint system in a locked position.**
- **Do not allow the passengers to lean their heads or bodies onto doors, put their arms on the doors, stretch their arms out of the window, or place objects between the doors and passengers when they are seated on seats equipped with side impact and/or curtain air bags.**

(Continued)

(Continued)

- **Never try to open or repair any components of the side curtain air bag system. This should only be done by an authorized KIA dealer.**

Failure to follow the above mentioned instructions can result in injury or death to the vehicle occupants in an accident.

امداد خودرو فارما
تلفن شبانه روزی: ۰۲۱-۸۸۸۶۲۰۸۵
FarmaSOS.com

C040800ATD

Why didn't my air bag go off in a collision? (Inflation and non-inflation conditions of the air bag)

There are many types of accidents in which the air bag would not be expected to provide additional protection.

These include rear impacts, second or third collisions in multiple impact accidents, as well as low speed impacts. In other words, just because your vehicle is damaged and even if it is totally unusable, don't be surprised that the air bags did not inflate.

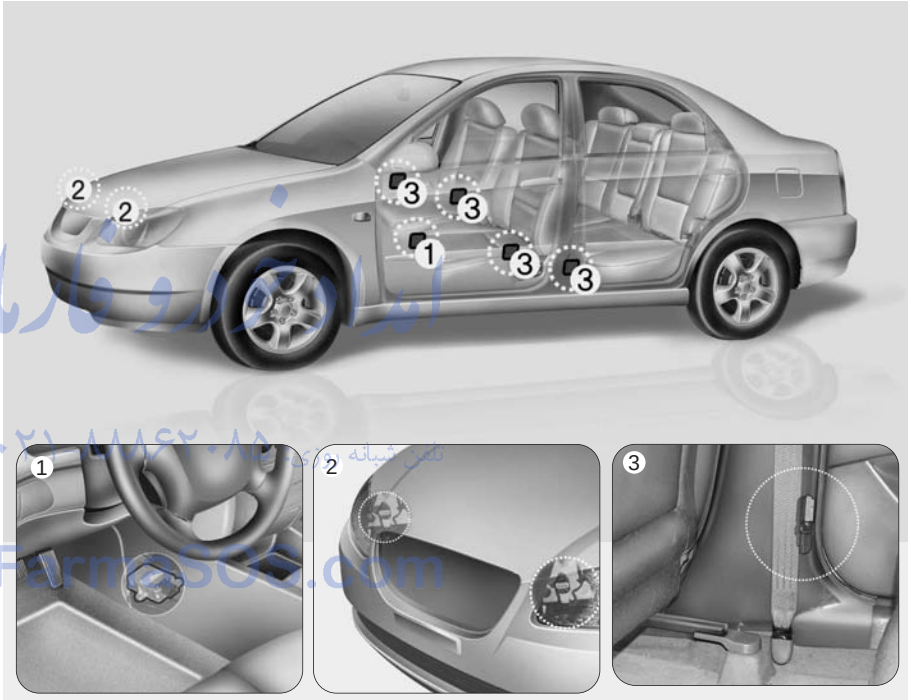

OTD039039NC/OMG035052/OHD036029/OMG035053

Air bag collision sensors

(1) SRS control module
(2) Front impact sensor
(3) Side impact sensor (if equipped)

⚠ WARNING

- **Do not hit or allow any objects to impact the locations where air bag or sensors are installed.**
  This may cause unexpected air bag deployment, which could result in serious personal injury or death.
- **If the installation location or angle of the sensors is altered in any way, the air bags may deploy when they should not or they may not deploy when they should, causing severe injury or death.**
  Therefore, do not try to perform maintenance on or around the air bag sensors. Have the vehicle checked and repaired by an authorized KIA dealer.

(Continued)

(Continued)

- **Problems may arise if the sensor installation angles are changed due to the deformation of the front bumper, body or B pillar where side collision sensors are installed. Have the vehicle checked and repaired by an authorized KIA dealer.**
- **Your vehicle has been designed to absorb impact and deploy the air bag(s) in certain collisions. Installing aftermarket bumper guards or replacing a bumper with non-genuine parts may adversely affect your vehicles collision and air bag deployment performance.**

FarmaSOS.com

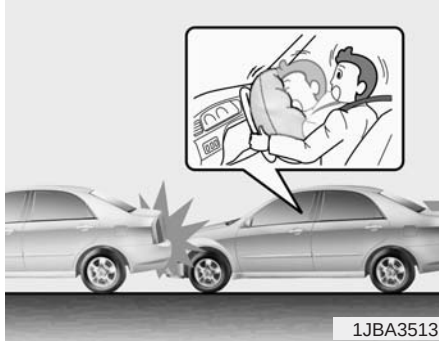

C040801APB

Air bag inflation conditions

Front air bags

Front air bags are designed to inflate in a frontal collision depending on the intensity, speed or angles of impact of the front collision.

1JBA3516

OUN026090

Side air bags (if equipped)

Side air bags (side impact and/or curtain air bags) are designed to inflate when an impact is detected by side collision sensors depending on the strength, speed or angles of impact resulting from a side impact collision.

Although the front air bags (driver's and front passenger's air bags) are designed to inflate only in frontal collisions, they also may inflate in other types of collisions if the front impact sensors detect a sufficient impact. Side air bags (side impact and/or curtain air bags) are designed to inflate only in side impact collisions, but they may inflate in other collisions if the side impact sensors detect a sufficient impact.

If the vehicle chassis is impacted by bumps or objects on unimproved roads, the air bags may deploy. Drive carefully on unimproved roads or on surfaces not designed for vehicle traffic to prevent unintended air bag deployment.

تلفن شبانه روزی: ۰۲۱-۸۸۸۶۲۰۸۵
FarmaSOS.com

1JBA3515

C040802ATD

Air bag non-inflation conditions

- In certain low-speed collisions the air bags may not deploy. The air bags are designed not to deploy in such cases because they may not provide benefits beyond the protection of the seat belts in such collisions.

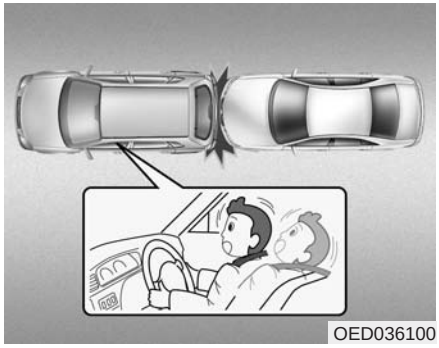
OED036100

- Front air bags are not designed to inflate in rear collisions, because occupants are moved backward by the force of the impact. In this case, inflated air bags would not be able to provide any additional benefit.

1JBA3516

- Front air bags may not inflate in side impact collisions, because occupants move to the direction of the collision, and thus in side impacts, front air bag deployment would not provide additional occupant protection.

  However, side impact or curtain air bags may inflate depending on the intensity, vehicle speed and angles of impact.

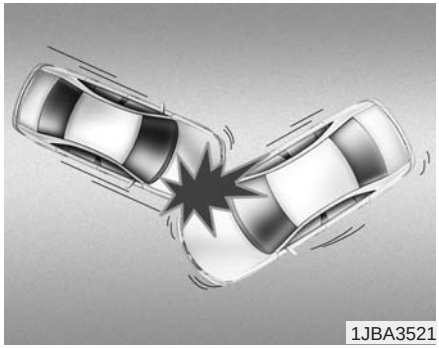
1JBA3521

- In a slant or angled collision, the force of impact may direct the occupants in a direction where the air bags would not be able to provide any additional benefit, and thus the sensors may not deploy any air bags.

FarmaSOS.com

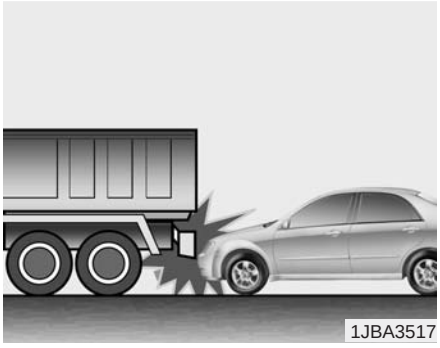
1JBA3517

- Just before impact, drivers often brake heavily. Such heavy braking lowers the front portion of the vehicle causing it to “ride” under a vehicle with a higher ground clearance. Air bags may not inflate in this "under-ride" situation because deceleration forces that are detected by sensors may be significantly replaced by such “under-ride” collisions.

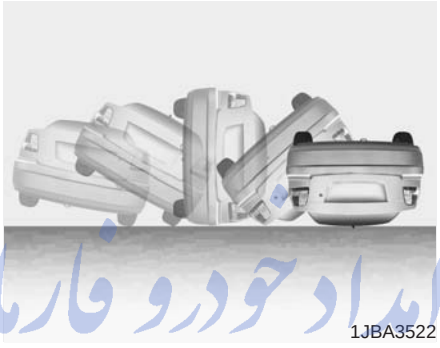
1JBA3522

- Air bags may not inflate in rollover accidents because air bag deployment would not provide protection to the occupants.
  However, side impact and/or curtain air bags may inflate when the vehicle is rolled over by a side impact collision, if the vehicle is equipped with side impact air bags and curtain air bags.

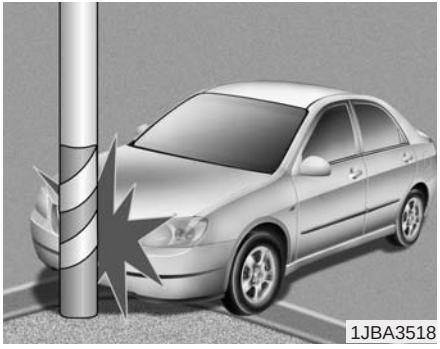
1JBA3518

- Air bags may not inflate if the vehicle collides with objects such as utility poles or trees, where the point of impact is concentrated to one area and the full force of the impact is not delivered to the sensors.

امداد خودرو فارما
تلفن شبانه روزی: ۰۲۱-۶۶۸۶۲۰۸۵
FarmaSos.com

C041100ATD

SRS Care

The SRS is virtually maintenance-free and so there are no parts you can safely service by yourself. If the SRS air bag warning light does not illuminate, or continuously remains on, have your vehicle immediately inspected by an authorized KIA dealer.

Any work on the SRS system, such as removing, installing, repairing, or any work on the steering wheel must be performed by an authorized KIA dealer. Improper handling of the SRS system may result in serious personal injury.

⚠ WARNING

- **Modification to SRS components or wiring, including the addition of any kind of badges to the pad covers or modifications to the body structure, can adversely affect SRS performance and lead to possible injury.**
- **For cleaning the air bag pad covers, use only a soft, dry cloth or one which has been moistened with plain water. Solvents or cleaners could adversely affect the air bag covers and proper deployment of the system.**
- **No objects should be placed over or near the air bag modules on the steering wheel, instrument panel, and the front passenger's panel above the glove box, because any such object could cause harm if the vehicle is in a crash severe enough to cause the air bags to inflate.**

(Continued)

(Continued)

- **If the air bags inflate, they must be replaced by an authorized KIA dealer.**
- **Do not tamper with or disconnect SRS wiring, or other components of the SRS system. Doing so could result in injury, due to accidental inflation of the air bags or by rendering the SRS inoperative.**
- **If components of the air bag system must be discarded, or if the vehicle must be scrapped, certain safety precautions must be observed. An authorized KIA dealer knows these precautions and can give you the necessary information. Failure to follow these precautions and procedures could increase the risk of personal injury.**
- **If your vehicle was flooded and has soaked carpeting or water on the floor, you shouldn't try to start the engine; have the vehicle towed to an authorized KIA dealer.**

C041300AUN

Additional safety precautions

- **Never let passengers ride in the cargo area or on top of a folded-down back seat.** All occupants should sit upright, fully back in their seats with their seat belts on and their feet on the floor.
- **Passengers should not move out of or change seats while the vehicle is moving.** A passenger who is not wearing a seat belt during a crash or emergency stop can be thrown against the inside of the vehicle, against other occupants, or out of the vehicle.
- **Each seat belt is designed to restrain one occupant.** If more than one person uses the same seat belt, they could be seriously injured or killed in a collision.
- **Do not use any accessories on seat belts.** Devices claiming to improve occupant comfort or repositioning the seat belt can reduce the protection provided by the seat belt and increase the chance of serious injury in a crash.
- **Passengers should not place hard or sharp objects between themselves and the air bags.** Carrying hard or sharp objects on your lap or in your mouth can result in injuries if an air bag inflates.
- **Keep occupants away from the air bag covers.** All occupants should sit upright, fully back in their seats with their seat belts on and their feet on the floor. If occupants are too close to the air bag covers, they could be injured if the air bags inflate.
- **Do not attach or place objects on or near the air bag covers.** Any object attached to or placed on the front or side air bag covers could interfere with the proper operation of the air bags.
- **Do not modify the front seats.** Modification of the front seats could interfere with the operation of the supplemental restraint system sensing components or side air bags.
- **Do not place items under the front seats.** Placing items under the front seats could interfere with the operation of the supplemental restraint system sensing components and wiring harnesses.
- **Never hold an infant or child on your lap.** The infant or child could be seriously injured or killed in the event of a crash. All infants and children should be properly restrained in appropriate child safety seats or seat belts in the rear seat.

Farmasos.com

⚠ WARNING

- **Sitting improperly or out of position can cause occupants to be shifted too close to a deploying air bag, strike the interior structure or be thrown from the vehicle resulting in serious injury or death.**
- **Always sit upright with the seatback in an upright position, centered on the seat cushion with your seat belt on, legs comfortably extended and your feet on the floor.**

C041400AUN

Adding equipment to or modifying your air bag-equipped vehicle

If you modify your vehicle by changing your vehicle's frame, bumper system, front end or side sheet metal or ride height, this may affect the operation of your vehicle's air bag system.

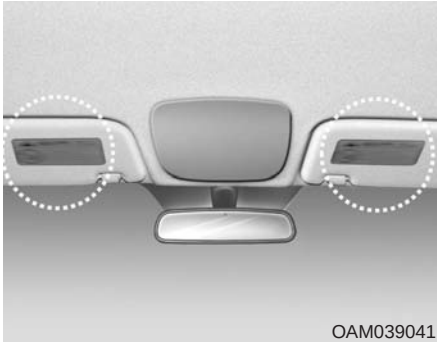

C041200AUN-EC

Air bag warning label (if equipped)

Air bag warning labels, some required by the Canada Motor Vehicle Safety Standards (CMVSS), are attached to alert the driver and passengers of potential risks of the air bag system.

امداد خودرو فارما
تلفن شبانه روزی: ۰۲۱-۸۸۸۶۲۰۸۵
FarmaSOS.com

Keys / 4-2
Smart key / 4-6
Remote keyless entry / 4-8
Door locks / 4-12
Trunk / 4-16
Tailgate (5 door vehicle) / 4-18
Windows / 4-20
Hood / 4-23
Fuel filler lid / 4-25

Features of your vehicle 4

Sunroof / 4-28
Steering wheel / 4-32
Mirrors / 4-35
Instrument cluster / 4-39
Rearview camera / 4-58
Hazard warning flasher / 4-58
Lighting / 4-59
Wipers and washers / 4-63
Interior light / 4-66
Defroster / 4-67
Manual climate control system / 4-69
Automatic climate control system / 4-78
Windshield defrosting and defogging / 4-85
Storage compartment / 4-88
Interior features / 4-96
Audio system / 4-94

امداد خودرو فارما
تلفن پاسخگوی روزی: ۰۲۱-۸۸۸۶۲۰۸۵
FarmaSOS.com

KEYS

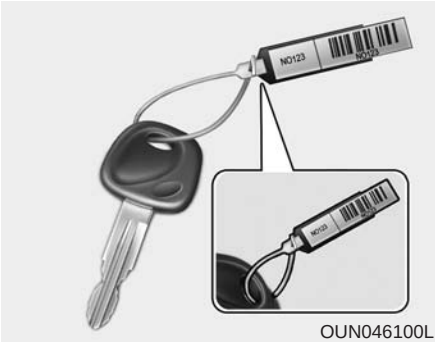

OUN046100L

D010100AMG

Record your key number

The key code number is stamped on the bar code tag attached to the key set. Should you lose your keys, this number will enable an authorized KIA dealer to duplicate the keys easily. Remove the bar code tag and store it in a safe place. Also, record the code number and keep it in a safe place (not in the vehicle).

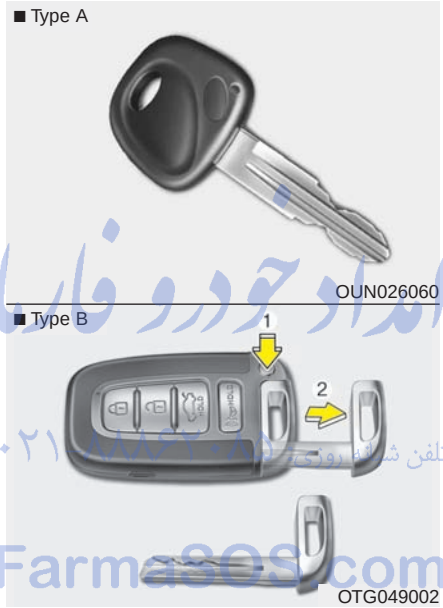

D010200ATD

Key operations

Used to start the engine, lock and unlock the doors.

Type B

To remove the mechanical key, press and hold the release button (1) and remove the mechanical key (2).

To reinstall the mechanical key, put the key into the hole and push it until a click sound is heard.

⚠ WARNING - Ignition key

Leaving children unattended in a vehicle with the ignition key is dangerous even if the key is not in the ignition switch. Children copy adults and they could place the key in the ignition switch. The ignition key would enable children to operate power windows or other controls, or even make the vehicle move, which could result in serious bodily injury or even death. Never leave the keys in your vehicle with unsupervised children.

امداد خودرو فارما
تلفن شانه روزی ۰۲۱۷۷۷۷۰۲۱
FarmaSOS.com

⚠ WARNING

Use only KIA original parts for the ignition key in your vehicle. If an aftermarket key is used, the ignition switch may not return to ON after START. If this happens, the starter will continue to operate causing damage to the starter motor and possible fire due to excessive current in the wiring.

D010300AAM-EC

Immobilizer system (if equipped)

Your vehicle may be equipped with an electronic engine immobilizer system to reduce the risk of unauthorized vehicle use.

Your immobilizer system is comprised of a small transponder in the ignition key and electronic devices inside the vehicle.

With the immobilizer system, whenever you insert your ignition key into the ignition switch and turn it to ON, it checks and determines and verifies that the ignition key is valid.

If the key is determined to be valid, the engine will start.

If the key is determined to be invalid, the engine will not start.

To deactivate the immobilizer system:

Insert the ignition key into the key cylinder and turn it to the ON position.

To activate the immobilizer system:

Turn the ignition key to the OFF position. The immobilizer system activates automatically. Without a valid ignition key for your vehicle, the engine will not start.

⚠ WARNING

In order to prevent theft of your vehicle, do not leave spare keys anywhere in your vehicle. Your immobilizer password is a customer unique password and should be kept confidential. Do not leave this number anywhere in your vehicle.

✻ NOTICE

When starting the engine, do not use the key with other immobilizer keys around. Otherwise the engine may not start or may stop soon after it starts. Keep each key separately in order to avoid a starting malfunction.

⚠ CAUTION

Do not put metal accessories near the ignition switch. Metal accessories may interrupt the transponder signal and may prevent the engine from being started.

✻ NOTICE

If you need additional keys or lose your keys, consult an authorized KIA dealer.

⚠ CAUTION

The transponder in your ignition key is an important part of the immobilizer system. It is designed to give years of trouble-free service, however you should avoid exposure to moisture, static electricity and rough handling. Immobilizer system malfunction could occur.

⚠ CAUTION

Do not change, alter or adjust the immobilizer system because it could cause the immobilizer system to malfunction and should only be serviced by an authorized KIA dealer.

Malfunctions caused by improper alterations, adjustments or modifications to the immobilizer system are not covered by your vehicle manufacturer warranty.

This device complies with Industry Canada Standard RSS-210.

Operation is subject to the following two conditions:

1. This device may not cause harmful interference, and
2. This device must accept any interference received, including interference that may cause undesired operation.

⚠ WARNING

Changes or modifications not expressly approved by the party responsible for compliance could void the user's authority to operate the equipment.

امداد خودرو فارما
تلفن اپ ۰۲۱-۸۸۱۴۴۰۸۸
Farma000.com

D010301AUN-EC

Limp home (override) procedure

When you turn the ignition switch to the ON position, if the immobilizer indicator ( ) goes off after blinking 5 times, your transponder equipped in the ignition key is out of order. You cannot start the engine without the lime home procedure. To start the engine, you have to input your password by using the ignition switch.

The following procedure is how to input your password of “2345” as an example.

1. Turn the ignition switch to the ON position. The immobilizer indicator ( ) will blink 5 times and go off indicating the beginning of the limp home procedure.
2. Turn the ignition switch to the ACC position.
3. To enter the first digit (in this example “2”), turn the ignition switch to the ON and ACC position twice. Perform the same procedure for the next digits between 3 seconds and 10 seconds (for example, for “3”, turn the ignition ON and ACC 3 times).
4. If all of the digits have been input successfully, you have to start the engine within 30 seconds. If you attempt to start the engine after 30 seconds, the engine will not start and you will have to input your password again.

After performing the limp home procedure, you have to see an authorized KIA dealer immediately to inspect and repair your ignition key or immobilizer system.

امداد خودرو فارما
تلفن شبانه روزی: ۰۲۱-۸۸۸۶۲۰۸۵
FarmaSOS.com

SMART KEY (IF EQUIPPED)

OTG049001

D040000ABK

With a smart key, you can lock or unlock a door and even start the engine without inserting the key.

The functions of the buttons on a smart key are similar to the remote keyless entry. (Refer to the “Remote keyless entry” in this section.)

D040100ATD

Smart key functions

Carrying the smart key, you may lock and unlock the vehicle doors. Also, you may start the engine. Refer to the following, for more details.

OMG049005

D040101ATD-EU

Locking

Pressing the button of the front outside door handles with all doors closed and any door unlocked, locks all the doors. The hazard warning lights will blink and the chime will sound once to indicate that all doors are locked. The button will only operate when the smart key is within 0.7~1 m (28~40 in.) from the outside door handle. If you want to make sure that a door has locked or not, you should check the door lock button inside the vehicle or pull the outside door handle.

Even though you press the button, the doors will not lock and the chime will sound for 3 seconds if any of the following occurs:

- The smart key is in the vehicle.
- The ignition switch is in the ACC or ON position.
- Any door except the trunk (or tailgate) is opened.

D040102ATD-EU

Unlocking

Pressing the button of the driver's outside door handle with all doors closed and locked, unlocks the driver's door. The hazard warning lights will blink and the chime will sound twice to indicate that the driver's door is unlocked. All doors are unlocked if the button is pressed once more within 4 seconds. The hazard warning lights will blink and the chime will sound twice to indicate that all the doors are unlocked.

Pressing the button in the front passenger's outside door handle with all doors closed and locked, unlocks all the doors. The hazard warning lights will blink and the chime will sound twice to indicate that all doors are unlocked. The button will only operate when the smart key is within 0.7~1 m (28~40 in.) from the outside door handle.

FarmasuB.com

D040104AHM

Start-up

You can start the engine without inserting the key. For detailed information refer to “Starting the engine with a smart key” in section 5.

D040300AHM-EC

Smart key precautions

✻ NOTICE

- **If, for some reason, you happen to lose your smart key, you will not be able to start the engine. Tow the vehicle, if necessary, and contact an authorized KIA dealer.**
- **A maximum of 2 smart keys can be registered to a single vehicle. If you lose a smart key, you should immediately take the vehicle and key to your authorized KIA dealer to protect it from potential theft.**
- **The smart key will not work if any of following occurs:**
  - **The smart key is close to a radio transmitter such as a radio station or an airport which can interfere with normal operation of the smart key.**
  - **The smart key near a mobile two-way radio system or a cellular phone.**
  - **Another vehicle’s smart key is being operated close to your vehicle.**

  When the smart key does not work correctly, open and close the door with the mechanical key. If you have a problem with the smart key, contact an authorized KIA dealer.

⚠ CAUTION

Keep the smart key away from water or any liquid. If the keyless entry system is inoperative due to exposure to water or liquids, it will not be covered by your manufacturer’s vehicle warranty.

This device complies with Industry Canada Standard RSS-210.

Operation is subject to the following two conditions:

1. This device may not cause harmful interference, and
2. This device must accept any interference received, including interference that may cause undesired operation.

⚠ WARNING

Changes or modifications not expressly approved by the party responsible for compliance could void the user’s authority to operate the equipment. If the keyless entry system is inoperative due to changes or modifications not expressly approved by the party responsible for compliance, it will not be covered by your manufacturer’s vehicle warranty.

FarmaSOS.com

REMOTE KEYLESS ENTRY (IF EQUIPPED)

ONF048011

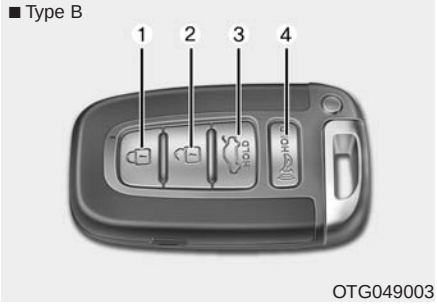

OTG049003

Remote keyless entry system operations

D020101ATD-EU

Lock (1)

All doors are locked if the lock button is pressed. If all doors (and trunk or tailgate) are closed, the hazard warning lights will blink once to indicate that all doors (and trunk) are locked.

Also, if the lock button is pressed once more within 4 seconds, the hazard warning lights will blink and the chime will sound once to confirm that the door is locked.

However, if any door remains open, the hazard warning lights (and/or the chime) will not operate. But if all doors are closed after the lock button is pressed, the hazard warning lights will blink once.

FarmaSOS.com

D020102ATD-EE

Unlock (2)

The driver's door is unlocked if the unlock button is pressed once. The hazard warning lights will blink (for smart key, the chime also sounds) twice to indicate that the driver's door is unlocked.

All doors are unlocked if the unlock button is pressed once more within 4 seconds. The hazard warning lights will blink (for smart key, the chime also sounds) twice again to indicate that all doors are unlocked. After pressing this button, the doors will lock automatically unless you open any door within 30 seconds.

D020104ATD-EE

Trunk (or tailgate) open (3) (if equipped)

The trunk (or tailgate) is opened if the button is pressed for more than 1 second.

Once the trunk (or tailgate) is opened and then closed, the trunk (or tailgate) will lock automatically.

D020105AHM

Alarm (4)

The horn sounds and the hazard warning lights blink for about 30 seconds if this button is pressed for more than 0.5 seconds. To stop the horn and lights, press any button on the transmitter.

D020200AHM-EC

Precautions

✻ NOTICE

The transmitter (or smart key) will not work if any of following occurs:

- **The ignition key is in the ignition switch.**
- **You exceed the operating distance limit (about 30 m [90 feet]).**
- **The battery in the transmitter (or smart key) is weak.**
- **Other vehicles or objects may be blocking the signal.**
- **The weather is extremely cold.**
- **The transmitter (or smart key) is close to a radio transmitter such as a radio station or an airport which can interfere with normal operation of the transmitter.**

When the transmitter (or smart key) does not work properly, open and close the door with the ignition key. If you have a problem with the transmitter (or smart key), contact an authorized KIA dealer.

⚠ CAUTION

Keep the transmitter (or smart key) away from water or any liquid. If the keyless entry system is inoperative due to exposure to water or liquids, it will not be covered by your manufacturer's vehicle warranty.

ایداد خودرو فارما
تلفن: ۰۲۱ ۸۸۸۶۲ ۸۵
FarmaSCIS.com

This device complies with Industry Canada Standard RSS-210.

Operation is subject to the following two conditions:

1. This device may not cause harmful interference, and
2. This device must accept any interference received, including interference that may cause undesired operation.

⚠ **CAUTION**

Changes or modifications not expressly approved by the party responsible for compliance could void the user's authority to operate the equipment. If the keyless entry system is inoperative due to changes or modifications not expressly approved by the party responsible for compliance, it will not be covered by your manufacturer's vehicle warranty.

امداد خودرو فارا
تلفن شبانه روزی: ۰۲۱-۸۸۸۶۲۰۸۵
Farmasot.com

D040500AMG

Battery replacement

A battery should last for several years, but if the transmitter or smart key is not working properly, try replacing the battery with a new one. If you are unsure how to use or replace the battery, contact an authorized KIA dealer.

1. Pry open the transmitter or smart key cover.
2. Replace the battery with a new battery (CR2032). When replacing the battery, make sure the battery positive "+" symbol faces up as indicated in the illustration.
3. Install the battery in the reverse order of removal.

⚠ CAUTION

- *The transmitter or smart key is designed to give you years of trouble-free use, however it can malfunction if exposed to moisture or static electricity. If you are unsure how to use or replace the battery, contact an authorized KIA dealer.*
- *Using the wrong battery can cause the transmitter or smart key to malfunction. Be sure to use the correct battery.*
- *To avoid damaging the transmitter or smart key, don't drop it, get it wet, or expose it to heat or sunlight.*
- *An inappropriately disposed battery can be harmful to the environment and human health.*

  Dispose the battery according to your local law(s) or regulation.

امداد خودرو فارما
تلفن شبانه روزی: ۰۲۱-۸۸۸۶۲۰۸۵
FarmaSOS.com

DOOR LOCKS

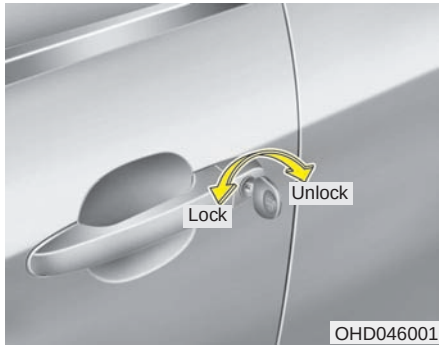

D050100ATD-EU

Operating door locks from outside the vehicle

- Turn the key toward the rear of the vehicle to unlock and toward the front of the vehicle to lock.
- If you lock/unlock the door with a key, all vehicle doors will lock/unlock automatically.
- From the driver's door, turn the key to the left once to unlock the driver's door and once more within 4 seconds to unlock all doors.
- Doors can also be locked and unlocked with the transmitter key (or smart key). (if equipped)
- Once the doors are unlocked, they may be opened by pulling the door handle.
- When closing the door, push the door by hand. Make sure the doors are closed securely.

✻ NOTICE

- **In cold and wet climates, door lock and door mechanisms may not work properly due to freezing conditions.**
- **If the door is locked/unlocked multiple times in rapid succession with either the vehicle key or door lock switch, the system may stop operating temporarily in order to protect the circuit and prevent damage to system components.**

FarmaSOS.com

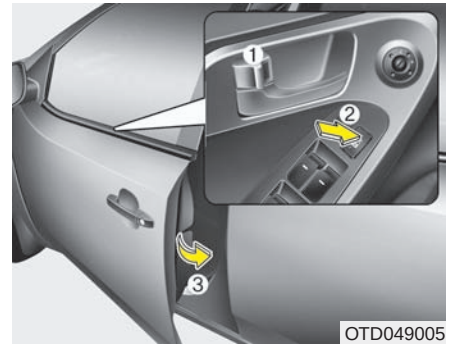

- To lock a door without the key, push the inside door lock button (1) or central door lock switch (2, if equipped) to the "Lock" position and close the door (3).
- If you lock the door with the central door lock switch (2), all vehicle doors will lock automatically. (if equipped with central door lock system)

✻ NOTICE

Always remove the ignition key, engage the parking brake, close all windows and lock all doors when leaving your vehicle unattended.

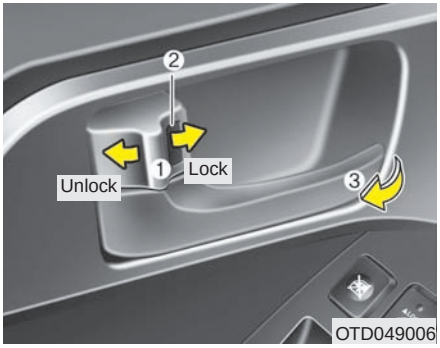

Operating door locks from inside the vehicle

D050201ATD-EE

With the door lock button

- To unlock a door, push the door lock button (1) to the “Unlock” position. The red mark (2) on the button will be visible.
- To lock a door, push the door lock button (1) to the “Lock” position. If the door is locked properly, the red mark (2) on the door lock button will not show.
- To open a door, pull the door handle (3) outward.

- If the inner door handle of the front door is pulled when the door lock button is in the lock position, the button will unlock and the door will open. (if equipped)
- Front doors cannot be locked if the ignition key is in the ignition switch (or if the smart key is in the vehicle) and any front door is opened. (if equipped)

⚠ WARNING - Door lock malfunction

If a power door lock ever fails to function while you are in the vehicle, try one or more of the following techniques to exit:

- **Operate the door unlock feature repeatedly (both electronic and manual) while simultaneously pulling on the door handle.**
- **Operate the other door locks and handles, front and rear.**
- **Lower a front window and use the key to unlock the door from outside.**

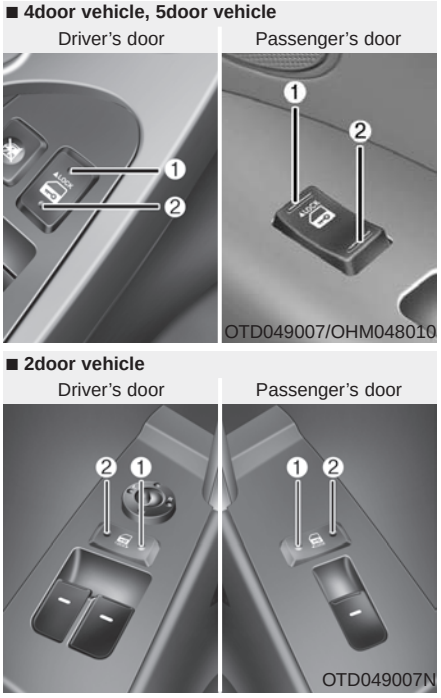

D050202ATD-EU

With central door lock switch (if equipped)

Operate by pressing the central door lock switch.

- Press the switch to the "Lock" position (1), all vehicle doors will lock.
- Press the switch to the "Unlock" position (2), all vehicle doors will unlock.
- If the key is in the ignition switch (or if the smart key is in the vehicle) and any front door is opened, the doors will not lock when the “Lock” position (1) of the central door lock switch is pressed. (if equipped)

⚠ WARNING - Doors

- **The doors should always be fully closed and locked while the vehicle is in motion to prevent accidental opening of the door. Locked doors will also discourage potential intruders when the vehicle stops or slows.**
- **Be careful when opening doors and watch for vehicles, motorcycles, bicycles or pedestrians approaching the vehicle in the path of the door. Opening a door when something is approaching can cause damage or injury.**

⚠ WARNING - Unlocked vehicles

Leaving your vehicle unlocked can invite theft or possible harm to you or others from someone hiding in your vehicle while you are gone. Always remove the ignition key, engage the parking brake, close all windows and lock all doors when leaving your vehicle unattended.

⚠ WARNING - Unattended children

An enclosed vehicle can become extremely hot, causing death or severe injury to unattended children or animals who cannot escape the vehicle. Furthermore, children might operate features of the vehicle that could injure them, or they could encounter other harm, possibly from someone gaining entry to the vehicle. Never leave children or animals unattended in your vehicle.

D050300AHM

Impact sensing door unlock system (if equipped)

All doors will automatically unlock when an impact causes the air bags to deploy.

D050400ATD-EU

Auto door lock/unlock feature (if equipped)

- All doors will automatically lock when the transaxle shift lever is shifted out of P (Park).
- All doors will automatically unlock when the transaxle shift lever is shifted into P (Park).

D050400ATD-EE

✻ NOTICE

An authorized KIA dealer can activate or deactivate some auto door lock/ unlock features as follows;

- **Auto door unlock by using the driver's door lock button**
- **Auto door lock/unlock by shifting the transaxle shift lever out of P (Park) or into P (Park)**
- **Auto door unlock when the ignition key is removed from the ignition switch (for smart key, when the ENGINE START/STOP button is turned to the OFF position)**

If you want to activate or deactivate some door lock/unlock feature, consult an authorized KIA dealer.

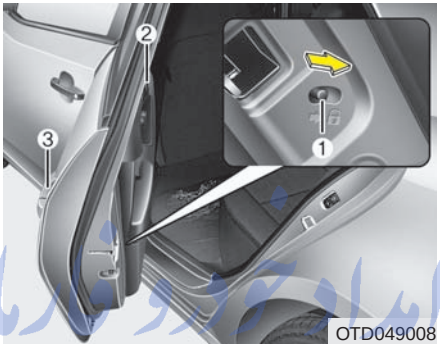

OTD049008

D050500ATD-EU

Child-protector rear door lock (for 4 door, 5 door vehicle only)

The child safety lock is provided to help prevent children from accidentally opening the rear doors from inside the vehicle. The rear door safety locks should be used whenever children are in the vehicle.

1. Open the rear door.
2. Push the child safety lock (1) located on the rear edge of the door to the lock position. When the child safety lock is in the lock position, rear door will not open even when the inner door handle is pulled.
3. Close the rear door.

To open the rear door, pull the outside door handle (3).

Even though the doors may be unlocked, the rear door will not open by pulling the inner door handle (2) until the rear door child safety lock is unlocked.

⚠ WARNING - Rear door locks

If children accidentally open the rear doors while the vehicle is in motion, they could fall out and be severely injured or killed. To prevent children from opening the rear doors from the inside, the rear door safety locks should be used whenever children are in the vehicle.

FarmaSOS.com

TRUNK (4 DOOR, 2 DOOR VEHICLE)

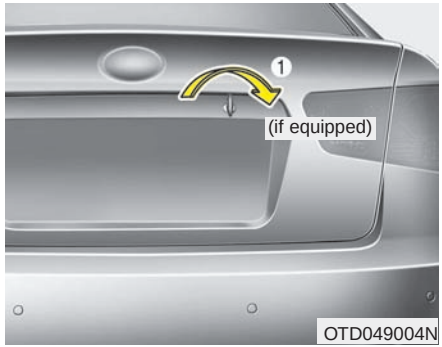

D070100BTD

Opening the trunk

With the key

- The trunk is opened with the key. (if equipped)
- The trunk is opened if the trunk open button on the transmitter (or smart key) is pressed. Once the trunk is opened and then closed, the trunk is locked automatically.

✻ NOTICE

If the trunk is closed with the smart key in it, the chime will sound for approximately 3 seconds and the trunk will reopen.

With remote trunk lid release

To open the trunk lid without using the key, pull up the trunk lid release lever.

تلفن شبانه روزی: ۰۲۱-۸۸۸۶۲۰۸۵
FarmaSOS.com

D070200ATD

Closing the trunk

To close the trunk, lower the trunk lid, then press down on it until it locks. To be sure the trunk lid is securely fastened, always check by trying to pull it up again.

⚠ WARNING

The trunk lid should be always kept completely closed while the vehicle is in motion. If it is left open or ajar, poisonous exhaust gases may enter the vehicle and serious illness or death may result.

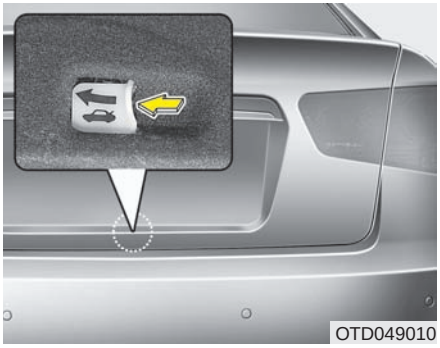

D070300ATD

Emergency trunk safety release

Your vehicle is equipped with an emergency trunk release cable located inside the trunk. The lever glows in the dark when the trunk lid is closed. If someone is inadvertently locked in the trunk, pulling this handle will release the trunk latch mechanism and open the trunk.

⚠ WARNING

- **No one should be allowed to occupy the trunk of the vehicle at any time. If the trunk is partially or totally latched and the person is unable to get out, severe injury or death could occur due to lack of ventilation, exhaust fumes and rapid heat build-up, or because of exposure to cold weather conditions. The trunk is also a highly dangerous location in the event of a crash because it is not a protected occupant space but merely a part of the vehicle's crush zone.**
- **Your vehicle should be kept locked and keys be kept out of the reach of children. Parents should teach their children about the dangers of playing in trunks.**

FarmaSOS.com

TAILGATE (5 DOOR VEHICLE)

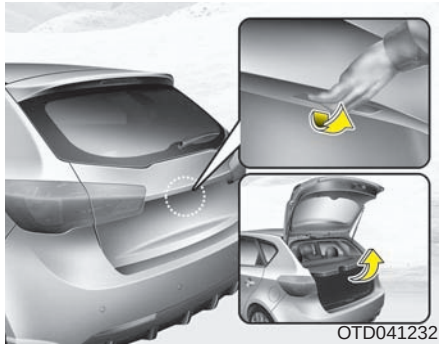

D070100AFD

Opening the tailgate

- The tailgate is locked or unlocked together if all doors are locked or unlocked with the key, transmitter or central door lock switch.
- The tailgate is unlocked alone for 30 seconds if the tailgate unlock button on the transmitter is pressed. Once the tailgate is opened and then closed, the tailgate is locked automatically.
- If unlocked, the tailgate can be opened by pressing the handle and pulling it up.

✻ NOTICE

In cold and wet climates, door lock and door mechanisms may not work properly due to freezing conditions.

⚠ WARNING

The tailgate swings upward. Make sure no objects or people are near the rear of the vehicle when opening the tailgate.

⚠ CAUTION

Make certain that you close the tailgate before driving your vehicle. Possible damage may occur to the tailgate lift cylinders and attaching hardware if the tailgate is not closed prior to driving.

FarmaSOS.com

D070200AUN

Closing the tailgate

To close the tailgate, lower and push down the tailgate firmly. Make sure that the tailgate is securely latched.

⚠ WARNING - Exhaust fumes

If you drive with the tailgate open, you will draw dangerous exhaust fumes into your vehicle which can cause serious injury or death to vehicle occupants.

If you must drive with the tailgate open, keep the air vents and all windows open so that additional outside air comes into the vehicle.

⚠ WARNING - Rear cargo area

Occupants should never ride in the rear cargo area where no restraints are available. To avoid injury in the event of an accident or sudden stops, occupants should always be properly restrained.

D070300AUN

Emergency tailgate safety release

Your vehicle is equipped with emergency tailgate safety release lever located on the bottom of the tailgate. When someone is inadvertently locked in the luggage compartment, if a key (or screwdriver) is inserted into the access hole and pushed (1), the tailgate latch mechanism is released and the tailgate is opened by pushing backward.

⚠ WARNING

- **For emergency, be fully aware of the location of the emergency tailgate safety release lever in their vehicle and how to open the tailgate if you are accidentally locked in the luggage compartment.**
- **No one should be allowed to occupy the luggage compartment of the vehicle at any time. The luggage compartment is a highly dangerous location in the event of a crash.**
- **Use the release lever for emergency only. Use extreme caution while the vehicle is in motion.**

FarmaSOS.com

WINDOWS

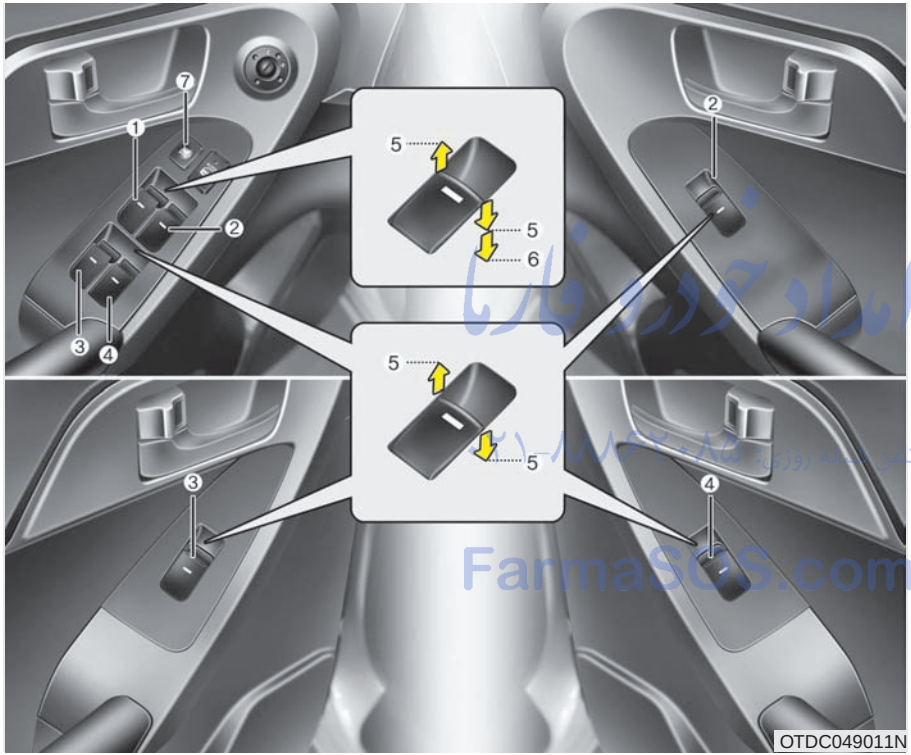

D080000APB

(1) Driver's door power window switch*
(2) Front passenger's door power window switch*
(3) Rear door (left) power window switch*
(4) Rear door (right) power window switch*
(5) Window opening and closing
(6) Automatic power window down*
(7) Power window lock button*

*: if equipped

✻ NOTICE

In cold and wet climates, power windows may not work properly due to freezing conditions.

FarmaSOS.com

D080100ATD

Power windows

The ignition switch must be in the ON position for power windows to operate. Each door has a power window switch that controls the door's window. The driver has a power window lock switch which can block the operation of passenger windows.

The power windows can be operated for approximately 30 seconds after the ignition key is removed or turned to the ACC or LOCK position. However, if the front doors are opened, the power windows cannot be operated even within the 30 second period.

✻ NOTICE

While driving with the rear windows down or with the sunroof (if equipped) in an open (or partially open) position, your vehicle may demonstrate a wind buffeting or pulsation noise. This noise is a normal occurrence and can be reduced or eliminated by taking the following actions. If the noise occurs with one or both of the rear windows down, partially lower both front windows approximately one inch. If you experience the noise with the sunroof open, slightly reduce the size of the sunroof opening.

D080101AUN

Window opening and closing (if equipped)

The driver's door has a master power window switch that controls all the windows in the vehicle.

To open or close a window, press down or pull up the front portion of the corresponding switch to the first detent position (5).

D080102AAM

Auto down window (if equipped) (Driver's window)

Pressing the power window switch momentarily to the second detent position (6) completely lowers the driver's window even when the switch is released. To stop the window at the desired position while the window is in operation, momentarily pull up the switch to the opposite direction of the window movement.

OTD049013

D080104AAM

Power window lock button (if equipped)

- The driver can disable the power window switches on the passenger door by pressing the power window lock switch located on the driver's door to the LOCK position (pressed).
- **When the power window lock button is in the LOCK position (pressed), the driver's master control cannot operate the passenger door power windows.**

امداد خودرو فارسا
FarsaDOS.com

⚠ CAUTION

- *To prevent possible damage to the power window system, do not open or close two windows or more at the same time. This will also ensure the longevity of the fuse.*
- *Never try to operate the main switch on the driver's door and the individual door window switch in opposing directions at the same time. If this is done, the window will stop and cannot be opened or closed.*

⚠ WARNING - Windows

- **NEVER leave the ignition key in the vehicle.**
- **NEVER leave any child unattended in the vehicle. Even very young children may inadvertently cause the vehicle to move, entangle themselves in the windows, or otherwise injure themselves or others.**
- **Always double check to make sure all arms, hands, head and other obstructions are safely out of the way before closing a window.**
- **Do not allow children to play with the power windows. Keep the driver's door power window lock switch in the LOCK position (pressed). Serious injury can result from unintentional window operation by the child.**
- **Do not extend any head or arms outside the window while driving.**

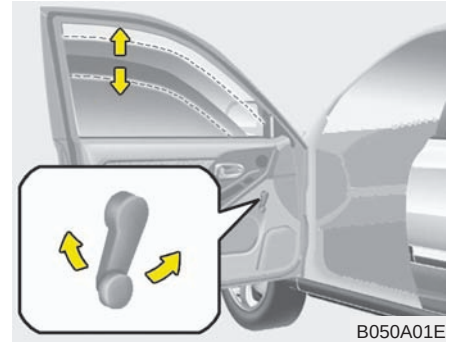

D080200AFD

Manual windows (if equipped)

To raise or lower the window, turn the window regulator handle clockwise or counterclockwise.

⚠ WARNING

When opening or closing the windows, make sure your passenger's arms, hands and body are safely out of the way.

HOOD

OTD049014

D090100TD

Opening the hood

1. Pull the release lever to unlatch the hood. The hood should pop open slightly.

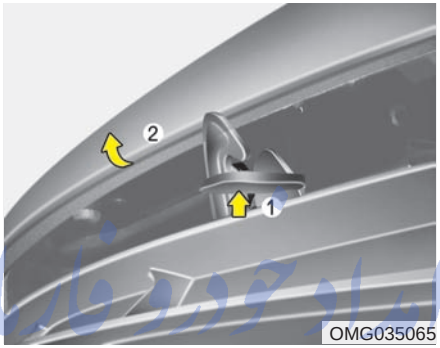

OMG035065

2. Go to the front of the vehicle, raise the hood slightly, push the secondary latch (1) inside of the hood center and lift the hood (2).

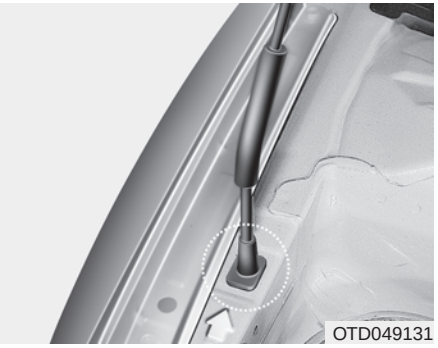
OTD049131

3. Pull out the support rod from the hood.
4. Hold the hood opened with the support rod.

⚠ WARNING - Hot parts

Grasp the support rod in the area wrapped in rubber. The plastic will help prevent you from being burned by hot metal when the engine is hot.

تلفن شبانه روزی: ۰۲۱-۸۸۸۴۲۰۸۵
FarmaSOS.com

D090200AAM

Closing the hood

1. Before closing the hood, check the following:
   - All filler caps in the engine compartment must be correctly installed.
   - Gloves, rags or any other combustible material must be removed from the engine compartment.
2. Return the support rod to its clip to prevent it from rattling.
3. Lower the hood until it is about 30 cm (1 ft.) above the closed position and let it drop. Make sure that it locks into place.

⚠ WARNING - Hood

- **Before closing the hood, ensure that all obstructions are removed from the hood opening. Closing the hood with an obstruction present in the hood opening may result in property damage or severe personal injury.**
- **Do not leave gloves, rags or any other combustible material in the engine compartment. Doing so may cause a heat-induced fire.**

⚠ WARNING

- **Always double check to be sure that the hood is firmly latched before driving away. If it is not latched, the hood could open while the vehicle is being driven, causing a total loss of visibility, which might result in an accident.**
- **The support rod must be inserted completely into the hole whenever you inspect the engine compartment. This will prevent the hood from falling and possibly injuring you.**
- **Do not move the vehicle with the hood raised. The view will be blocked and the hood could fall or be damaged.**

تلفن شبانه روزی: ۰۲۱-۸۸۸۶۲۰۸۵
FarmaSOS.com

FUEL FILLER LID

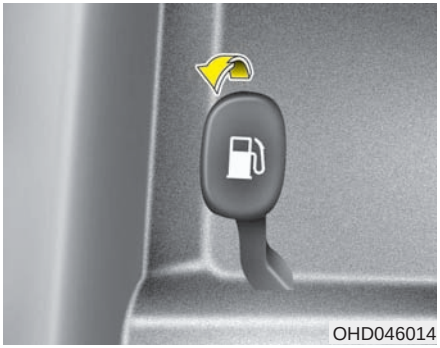

D100100ATD

Opening the fuel filler lid

The fuel filler lid must be opened from inside the vehicle by pulling up the fuel filler lid opener.

✱ NOTICE

If the fuel filler lid does not open because ice has formed around it, tap lightly or push on the lid to break the ice and release the lid. Do not pry on the lid. If necessary, spray around the lid with an approved de-icer fluid (do not use radiator anti-freeze) or move the vehicle to a warm place and allow the ice to melt.

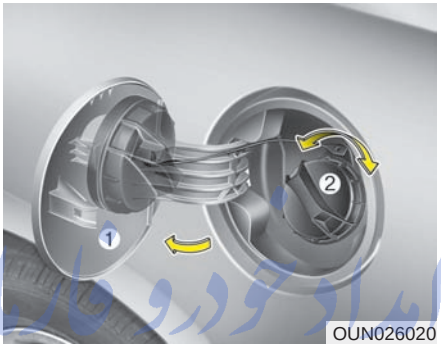

1. Stop the engine.
2. To open the fuel filler lid, pull the fuel filler lid opener up.
3. Pull open the fuel filler lid (1).
4. To remove the cap (2), turn the fuel filler cap counterclockwise.
5. Refuel as needed.

FarmaSOS.com

D100200AAM

Closing the fuel filler lid

1. To install the cap, turn it clockwise until it “clicks”. This indicates that the cap is securely tightened.
2. Close the fuel filler lid and push it in lightly and make sure that it is securely closed.

D100300AAM-EC

⚠ WARNING - Refueling

- **If pressurized fuel sprays out, it can cover your clothes or skin and subject you to the risk of fire and burns. Always remove the fuel cap carefully and slowly. If the cap is venting fuel or if you hear a hissing sound, wait until the condition stops before completely removing the cap.**
- **Do not "top off" after the nozzle automatically shuts off when refueling.**
- **Tighten the cap until it clicks, otherwise the Check Engine light will illuminate.**
- **Always check that the fuel cap is installed securely to prevent fuel spillage in the event of an accident.**

⚠ WARNING - Refueling dangers

Automotive fuels are flammable materials. When refueling, please note the following guidelines carefully. Failure to follow these guidelines may result in severe personal injury, severe burns or death by fire or explosion.

- **Read and follow all warnings posted at the gas station facility.**
- **Before refueling, note the location of the Emergency Gasoline Shut-Off, if available, at the gas station facility.**
- **Before touching the fuel nozzle, you should eliminate potentially dangerous static electricity discharge by touching another metal part of the vehicle, a safe distance away from the fuel filler neck, nozzle, or other gas source.**

(Continued)

(Continued)

- **Do not get back into a vehicle once you have begun refueling since you can generate static electricity by touching, rubbing or sliding against any item or fabric (polyester, satin, nylon, etc.) capable of producing static electricity. Static electricity discharge can ignite fuel vapors resulting in rapid burning. If you must re-enter the vehicle, you should once again eliminate potentially dangerous static electricity discharge by touching a metal part of the vehicle, away from the fuel filler neck, nozzle or other gasoline source.**
- **When using an approved portable fuel container be sure to place the container on the ground prior to refueling. Static electricity discharge from the container can ignite fuel vapors causing a fire. Once refueling has begun, contact with the vehicle should be maintained until the filling is complete.**

(Continued)

(Continued)

Use only approved portable plastic fuel containers designed to carry and store gasoline.

- **Do not use cellular phones while refueling. Electric current and/or electronic interference from cellular phones can potentially ignite fuel vapors causing a fire.**
- **When refueling, always shut the engine off. Sparks produced by electrical components related to the engine can ignite fuel vapors causing a fire. Once refueling is complete, check to make sure the filler cap and filler door are securely closed, before starting the engine.**
- **DO NOT use matches or a lighter and DO NOT SMOKE or leave a lit cigarette in your vehicle while at a gas station especially during refueling. Automotive fuel is highly flammable and can, when ignited, result in fire.**

(Continued)

FarmaSOS.com

(Continued)

- **If a fire breaks out during refueling, leave the vicinity of the vehicle, and immediately contact the manager of the gas station and then contact the local fire department. Follow any safety instructions they provide.**

⚠ **CAUTION**

- ***Make sure to refuel your vehicle according to the "Fuel requirements" suggested in section 1.***
- ***If the fuel filler cap requires replacement, use only a genuine KIA cap or the equivalent specified for your vehicle. An incorrect fuel filler cap can result in a serious malfunction of the fuel system or emission control system.***
- ***Do not spill fuel on the exterior surfaces of the vehicle. Any type of fuel spilled on painted surfaces may damage the paint.***
- ***After refueling, make sure the fuel cap is installed securely to prevent fuel spillage in the event of an accident.***

FarmaSOS.com

SUNROOF (IF EQUIPPED)

D110000AHM-EE

If your vehicle is equipped with a sunroof, you can slide or tilt your sunroof with the sunroof control lever located on the overhead console.

The sunroof can only be opened, closed, or tilted when the ignition switch is in the ON position.

✻ NOTICE

- **In cold and wet climates, the sunroof may not work properly due to freezing conditions.**
- **After the vehicle is washed or in a rainstorm, be sure to wipe off any water that is on the sunroof before operating it.**

⚠ CAUTION

Do not continue to press the sunroof control lever after the sunroof is fully opened, closed, or tilted. Damage to the motor or system components could occur.

تلفن شبانه روزی: ۰۲۱-۸۸۸۶۲۰۸۵
FarmaSOS.com

✻ NOTICE

The sunroof cannot slide when it is in the tilt position nor can it be tilted while in an open or slide position.

⚠ WARNING

Never adjust the sunshade or sunroof while driving. This could result in loss of control and an accident that may cause death, serious injury, or property damage.

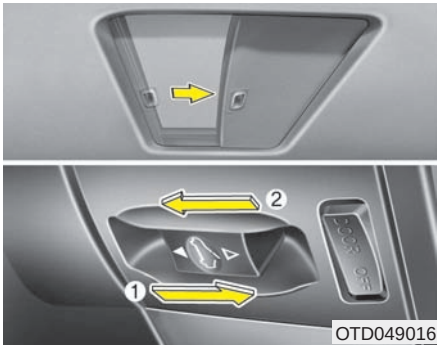

D110100ATD

Sliding the sunroof

To open or close the sunroof (manual slide feature), pull or push the sunroof control lever backward or forward to the first detent position.

To open the sunroof automatically:

Pull the sunroof control lever backward (1) to the second detent position and then release it. The sunroof will slide open automatically but will not open all the way. If you would like to completely open the sunroof, pull the lever once more. However, the second time the lever is pulled the sunroof will open only while the lever is pulled.

To stop the sunroof sliding at any point, pull or push the sunroof control lever momentarily.

To close the sunroof automatically:

Push the sunroof control lever forward (2) to the second detent position and then release it. The sunroof will automatically close all the way.

To stop the sunroof sliding at any point, pull or push the sunroof control lever momentarily.

PartsSOS.com

D110101AEN

Automatic reversal

If an object or part of the body is detected while the sunroof is closing automatically, it will reverse direction, and then stop.

The auto reverse function does not work if a tiny obstacle is between the sliding glass and the sunroof sash. You should always check that all passengers and objects are away from the sunroof before closing it.

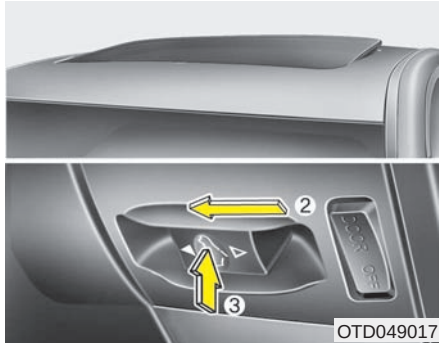

OTD049017

D110200ATD

Tilting the sunroof

To open the sunroof, push the control lever (3) on the overhead console.

The sunroof will tilt only while the control lever is pushed.

To close the sunroof, push the sunroof control lever forward (2).

⚠ WARNING - Sunroof

- **Be careful that no heads, hands and body parts are not obstructed by a closing sunroof.**
- **Do not extend the face, neck, arms or body outside the sunroof while driving.**
- **Make sure your hand and face are safely out of the way before closing a sunroof.**

⚠ CAUTION

- ***Periodically remove any dirt that may accumulate on the guide rail.***
- ***If you try to open the sunroof when the temperature is below freezing or when the sunroof is covered with snow or ice, the glass or the motor could be damaged.***
- ***While using sunroof for a long time, a dust between sunroof and roof panel can make a noise.***

  Open the sunroof and remove regularly the dust using clean cloth.

OBK049019

D110300ATD

Sunshade

The sunshade will automatically open when the glass panel is moved. Close it manually if you want it closed.

امداد خودرو فارما
تلفن شبانه روزی: ۰۲۱-۸۸۷۶۲۱۰۸۵
FarmaSOS.com

D110500ATD

Resetting the sunroof

Whenever the vehicle battery is disconnected or discharged, or related fuse is blown, you must reset your sunroof system as follows:

1. Turn the ignition switch to the ON position.
2. According to the position of the sunroof, do the following.
   1) In case the sunroof is closed completely or tilted:
      Push the sunroof control lever upward until the sunroof tilts completely upward.
   2) In case the sunroof is open:
      Push the sunroof control lever forward until the sunroof closes completely. Push the sunroof control lever upward until the sunroof tilts completely upward.
3. Release the sunroof control lever.
4. Push the sunroof control lever upward (for about 10 seconds) until the sunroof has returned to the original tilt position after it is raised a little higher than the maximum tilt position. Then, release the lever.
5. Push the sunroof control lever upward until the sunroof completes operating as follows;

   TILT DOWN → SLIDE OPEN → SLIDE CLOSE

   Then, release the lever.

When this is complete, the sunroof system has been reset.

امداد خودرو فارما
تلفن شبانه روزی: ۰۲۱-۸۸۸۶۲۰۸۵
FarmaSOS.com

STEERING WHEEL

D130100AHM

Power steering (if equipped)

Power steering uses energy from the engine to assist you in steering the vehicle. If the engine is off or if the power steering system becomes inoperative, the vehicle may still be steered, but it will require increased steering effort.

Should you notice any change in the effort required to steer during normal vehicle operation, have the power steering checked by an authorized KIA dealer.

⚠ CAUTION

Never hold the steering wheel to the extreme right or left for more than 5 seconds with the engine running. Holding the steering wheel for more than 5 seconds in either position may cause damage to the power steering pump.

✻ NOTICE

- **If the power steering drive belt breaks or if the power steering pump malfunctions, the steering effort will greatly increase.**
- **If the vehicle is parked for extended periods outside in cold weather (below -10°C/14°F), the power steering may require increased effort when the engine is first started. This is caused by increased fluid viscosity due to the cold weather and does not indicate a malfunction.**
  When this happens, increase the engine RPM by depressing the accelerator until the RPM reaches 1,500 rpm then release or let the engine idle for two or three minutes to warm up the fluid.

FarmaSOS.com

D130200ATD

Electric power steering (if equipped)

Power steering uses the motor to assist you in steering the vehicle. If the engine is off or if the power steering system becomes inoperative, the vehicle may still be steered, but it will require increased steering effort.

The motor driven power steering is controlled by the power steering control unit which senses the steering wheel torque and vehicle speed to command the motor.

The steering wheel becomes heavier as the vehicle's speed increases and becomes lighter as the vehicle's speed decreases for better control of the steering wheel.

Should you notice any change in the effort required to steer during normal vehicle operation, have the power steering checked by an authorized KIA dealer.

✻ NOTICE

The following symptoms may occur during normal vehicle operation:

- **The EPS warning light does not illuminate.**
- **The steering wheel becomes heavier after turning the ignition switch on. This happens as the system performs the EPS system diagnostics. When the diagnostics is completed, the steering wheel will return to its normal condition.**
- **Click noise may be heard from the EPS relay after the ignition switch is turned to the ON or LOCK position.**
- **Motor noise may be heard when the vehicle is at a stop or at a low driving speed.**
- **If the Electric Power Steering System does not operate normally, the warning light will illuminate on the instrument cluster. The steering wheel may become difficult to control or operate abnormally. Take your vehicle to an authorized KIA dealer and have the vehicle checked as soon as possible.**
- **When you operate the steering wheel in low temperature, abnormal noise could occur. If temperature rises, the noise will disappear. This is a normal condition.**

D130300AFD

Tilt steering (if equipped)

Tilt steering allows you to adjust the steering wheel before you drive. You can also raise it to give your legs more room when you exit and enter the vehicle.

The steering wheel should be positioned so that it is comfortable for you to drive, while permitting you to see the instrument panel warning lights and gauges.

⚠ WARNING

- **Never adjust the angle and height of the steering wheel while driving. You may lose steering control and cause severe personal injury, death or accidents.**
- **After adjusting, push the steering wheel both up and down to be certain it is locked in position.**

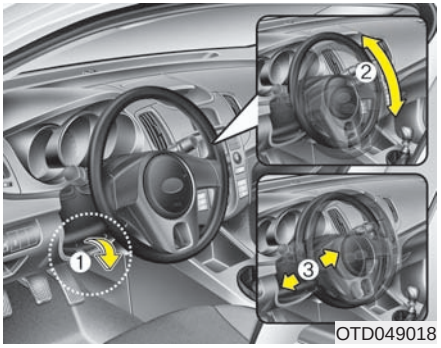

OTD049018

To change the steering wheel angle, pull down the lock release lever (1), adjust the steering wheel to the desired angle (2) and height (if equipped) (3), then pull up the lock-release lever to lock the steering wheel in place. Be sure to adjust the steering wheel to the desired position before driving.

D130500AUN

Horn

To sound the horn, press the horn symbol on your steering wheel. Check the horn regularly to be sure it operates properly.

✻ NOTICE

To sound the horn, press the area indicated by the horn symbol on your steering wheel (see illustration). The horn will operate only when this area is pressed.

⚠ CAUTION

Do not strike the horn severely to operate it, or hit it with your fist. Do not press on the horn with a sharp-pointed object.

امداد خودرو فارما
تلفن شبانه روزی: ۰۲۱-۸۸۸۶۲۰۸۵
FarmaSOS.com

MIRRORS

D140100ATD

Inside rearview mirror

Adjust the rearview mirror so that the center view through the rear window is seen. Make this adjustment before you start driving.

⚠ WARNING - Rear visibility

Do not place objects in the rear seat which would interfere with your vision through the rear window.

⚠ WARNING

Do not adjust the rearview mirror while the vehicle is moving. This could result in loss of control, and an accident which could cause death, serious injury or property damage.

OMG035072

D140101AHM

Day/night rearview mirror (if equipped)

Make this adjustment before you start driving and while the day/night lever is in the day position.

Pull the day/night lever toward you to reduce the glare from the headlights of the vehicles behind you during night driving.

Remember that you lose some rearview clarity in the night position.

D140102ATD

Electric chromic mirror (ECM) (if equipped)

The electric rearview mirror automatically controls the glare from the headlights of the vehicle behind you in nighttime or low light driving conditions. The sensor mounted in the mirror senses the light level around the vehicle, and automatically controls the headlight glare from vehicles behind you.

When the engine is running, the glare is automatically controlled by the sensor mounted in the rearview mirror.

Whenever the shift lever is shifted into reverse (R), the mirror will automatically go to the brightest setting in order to improve the drivers view behind the vehicle.

⚠ CAUTION

When cleaning the mirror, use a paper towel or similar material dampened with glass cleaner. Do not spray glass cleaner directly on the mirror. It may cause the liquid cleaner to enter the mirror housing.

امداد خودرو فارما
FarmaSOS.com

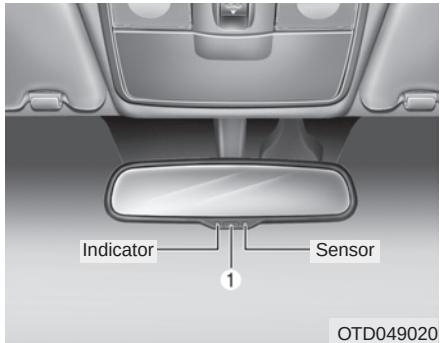

To operate the electric rearview mirror

- Press the ON/OFF button (1) to turn the automatic dimming function on. The mirror indicator light will illuminate.

  Press the ON/OFF button to turn the automatic dimming function off. The mirror indicator light will turn off.
- The mirror defaults to the ON position whenever the ignition switch is turned on.

D140200ATD-EU

Outside rearview mirror

Be sure to adjust the mirror angles before driving.

Your vehicle is equipped with both left-hand and right-hand outside rearview mirrors. The mirrors can be adjusted remotely with the remote switch (if equipped). The mirror heads can be folded to prevent damage during an automatic car wash or when passing through a narrow street.

امداد خودرو فارما
تلفن شبانه روزی: ۰۲۱-۸۸۸۶۲۰۸۵
FarmaSOS.com

⚠ WARNING - Rearview mirrors

- **The right outside rearview mirror is convex. Objects seen in the mirror are closer than they appear.**
- **Use your interior rearview mirror or direct observation to determine the actual distance of following vehicles when changing lanes.**

⚠ CAUTION

Do not scrape ice off the mirror face; this may damage the surface of the glass. If ice should restrict movement of the mirror, do not force the mirror for adjustment. To remove ice, use a deicer spray, or a sponge or soft cloth with very warm water.

⚠ CAUTION

If the mirror is jammed with ice, do not adjust the mirror by force. Use an approved spray de-icer (not radiator antifreeze) to release the frozen mechanism or move the vehicle to a warm place and allow the ice to melt.

⚠ WARNING

Do not adjust or fold the outside rearview mirrors while the vehicle is moving. This could result in loss of control, and an accident which could cause death, serious injury or property damage.

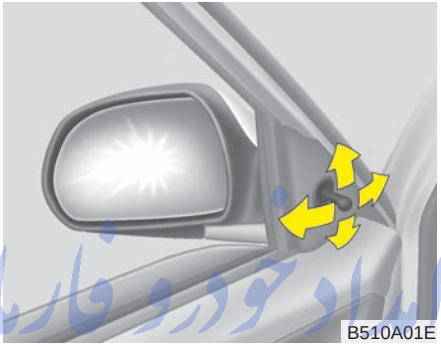

D140201APB

Remote control

Manual type (if equipped)

To adjust an outside mirror, move the control lever.

FarmaSOS.com

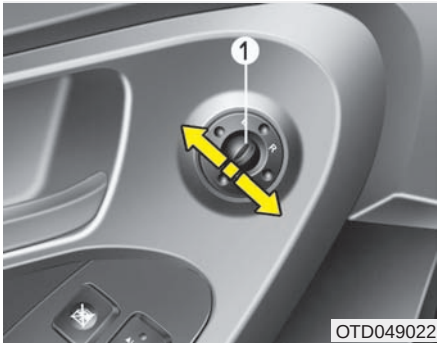

D140201ATD

Electric type (if equipped)

The electric remote control mirror switch allows you to adjust the position of the left and right outside rearview mirrors. To adjust the position of either mirror the ignition switch should be in the ACC position. Move the lever (1) to R or L to select the right side mirror or the left side mirror, then press a corresponding point on the mirror adjustment control to position the selected mirror up, down, left or right.

After the adjustment, put the lever into the neutral (center) position to prevent inadvertent adjustment.

⚠ CAUTION

- ***The mirrors stop moving when they reach the maximum adjusting angles, but the motor continues to operate while the switch is pressed. Do not press the switch longer than necessary, the motor may be damaged.***
- ***Do not attempt to adjust the outside rearview mirror by hand. Doing so may damage the related parts.***

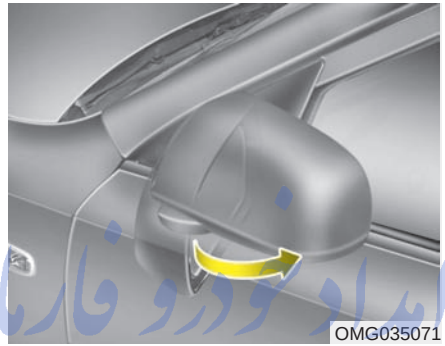

D140202ATD

Folding the outside rearview mirror

To fold the outside rearview mirror, grasp the housing of the mirror and then fold it toward the rear of the vehicle.

FarmaSOS.com

INSTRUMENT CLUSTER

■ **Type A**

■ **Type B**

1. Tachometer
2. Fuel gauge
3. Speedometer
4. Turn signal indicators
5. Warning and indicator lights
6. Odometer/Trip computer*
7. LCD display*

* : if equipped

* The actual cluster in the vehicle may differ from the illustration.
For more details refer to the "Gauges" in the next pages.

OTD049050C/OTD049051C

D150000ATD

تلفن شبانه روزی: ۰۲۱-۸۸۸۶۲۰۸۵
PrimaGeo.com

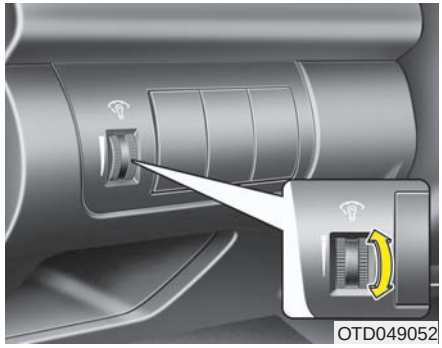
OTD049052

D150100ATD-EU

Instrument panel illumination (if equipped)

When the vehicle's parking lights or headlights are on, rotate the illumination control knob to adjust the brightness of the instrument panel illumination.

The brightness of the instrument panel (Type B) illumination can be adjusted by rotating the control knob when the ignition switch is in ON position.

OTD049053L

Gauges

D150201AHM

Speedometer

The speedometer indicates the forward speed of the vehicle.

The speedometer is calibrated in kilometers per hour and/or miles per hour.

OTD049054

D150202AFD

Tachometer

The tachometer indicates the approximate number of engine revolutions per minute (rpm).

Use the tachometer to select the correct shift points and to prevent lugging and/or over-revving the engine.

The tachometer pointer may move slightly when the ignition switch is in ACC or ON position with the engine OFF. This movement is normal and will not affect the accuracy of the tachometer once the engine is running.

⚠ CAUTION

Do not operate the engine within the tachometer's RED ZONE. This may cause severe engine damage.

FarmaSOS.com

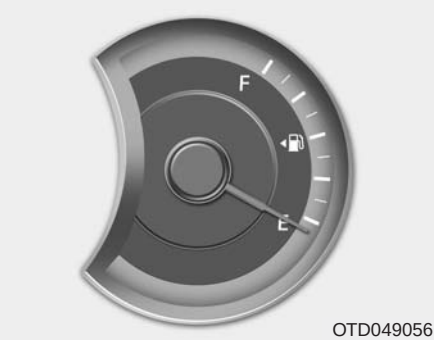

OTD049056

D150204ATD

Fuel gauge

The fuel gauge indicates the approximate amount of fuel remaining in the fuel tank. The fuel tank capacity is given in section 8. The fuel gauge is supplemented by a low fuel warning light, which will illuminate when the fuel tank is nearly empty.

On inclines or curves, the fuel gauge pointer may fluctuate or the low fuel warning light may come on earlier than usual due to the movement of fuel in the tank.

⚠ WARNING - Fuel gauge

Running out of fuel can expose vehicle occupants to danger.

You must stop and obtain additional fuel as soon as possible after the warning light comes on or when the gauge indicator comes close to the E level.

⚠ CAUTION

Avoid driving with extremely low fuel level. Running out of fuel could cause the engine to misfire, damaging the catalytic converter.

امداد خودرو فارما
تلفن شبانه روزی: ۰۲۱-۸۸۸۰۲۰۸۵
FarmaSOS.com

■ Type A

OTD049058C

■ Type B

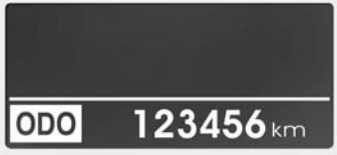

OTD049200

D150205ATD-EU

Odometer

Odometer

The odometer indicates the total distance the vehicle has been driven.

You will also find the odometer useful to determine when periodic maintenance should be performed.

✻ NOTICE

It is forbidden to alter the odometer of all vehicles with the intent to change the mileage registered on the odometer. The alteration may void your warranty coverage.

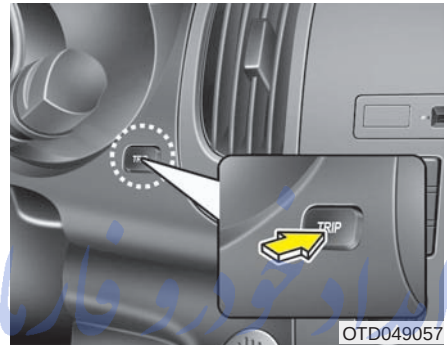

D150206ATD-EU

Trip computer (Tripmeter) / ECO mode (if equipped)

The trip computer is a microcomputer-controlled driver information system that displays information related to driving, when the ignition switch is in the ON position. All stored driving information (except distance to empty and instant fuel consumption) will reset if the battery is disconnected.

Press the TRIP button for less than 1 second to select each function as follows :

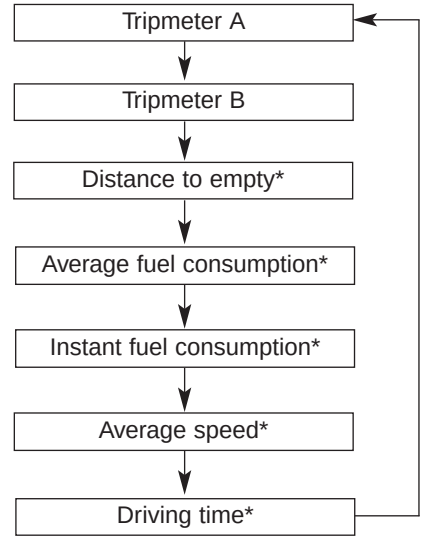

* : if equipped

Also, the ECO indicator ON/OFF mode can be selected by pressing the trip button for less than 1 second.

■ Type A

OTD049059

■ Type B

OTD049060

Tripmeter

TRIP A: Tripmeter A

TRIP B: Tripmeter B

This mode indicates the distance of individual trips selected since the last tripmeter reset.

The meter's working range is from 0.0 to 999.9 km (0.0 to 999.9 miles).

Pressing the TRIP button for more than 1 second, when the tripmeter (TRIP A or TRIP B) is being displayed, clears the tripmeter to zero (0.0).

امداد خودرو فارما
تلفن شبانه روزی: ۰۲۱-۸۸۸۶۲۰۸۵
FarmaSOS.com

■ Type A

OTD049061C

■ Type B

OTD049062L

Distance to empty (if equipped)

This mode indicates the estimated distance to empty based on the current fuel in the fuel tank and the amount of fuel delivered to the engine. When the remaining distance is below 50 km (30 miles), “---” will be displayed and the distance to empty indicator will blink.

The meter’s working range is from 50 to 999 km (30 to 990 miles).

■ Type A

OTD049065N

■ Type B

OTD049066L

Average fuel consumption (if equipped)

This mode calculates the average fuel consumption from the total fuel used and the distance since the last average consumption reset. The total fuel used is calculated from the fuel consumption input. For an accurate calculation, drive more than 50 m (0.03 mile).

Pressing the TRIP button for more than 1 second, when the average fuel consumption is displayed, clears the average fuel consumption to zero (---).

■ Type A

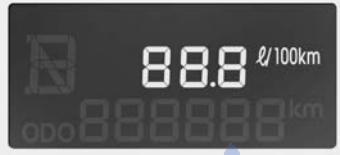

OTD049068B

■ Type B

OTD049068L

Instant fuel consumption (if equipped)

This mode calculates the instant fuel consumption during the last few seconds.

■ Type A

OTD049069N

■ Type B

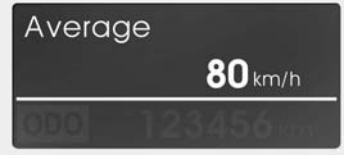

OTD049070L

Average speed (if equipped)

This mode calculates the average speed of the vehicle since the last average speed reset.

Even if the vehicle is not in motion, the average speed keeps going while the engine is running.

Pressing the TRIP button for more than 1 second, when the average speed is displayed, clears the average speed to zero (---).

۰۲۱-۸۸۸۶۲۰۸۵
FarmaSOS.com

■ Type A

OTD049217N

■ Type B

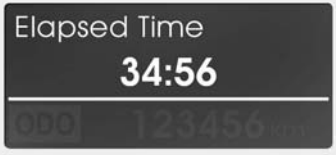

OTD049072L

Driving time (if equipped)

This mode indicates the total time traveled since the last driving time reset.

Even if the vehicle is not in motion, the driving time keeps going while the engine is running.

The meter's working range is from 0:00~99:59.

Pressing the TRIP button for more than 1 second, when the driving time is being displayed, clears the driving time to zero (0:00).

✻ NOTICE

- **If the vehicle is not on level ground or the battery power has been interrupted, the "Distance to empty" function may not operate correctly.**
  The trip computer may not register additional fuel if less than 1.6 gallons (6 liters) of fuel are added to the vehicle.
- **The fuel consumption and distance to empty values may vary significantly based on driving conditions, driving habits, and condition of the vehicle.**
- **The distance to empty value is an estimate of the available driving distance. This value may differ from the actual driving distance available.**

تلفن شبانه روزی: ۰۹۱۲۱۰۸۸۸۵۷
FarmaSOS.com

■ Type A

OTD049230N
OTD049231N

■ Type B

OTD049232N
OTD049233N

ECO ON/OFF mode (if equipped)

You can turn the ECOMINDER™ indicator (which is identified on your instrument dashboard by the "ECO" name) on/off on the instrument cluster in this mode.

If you push the TRIP button more than 1 second in the ECOMINDER™ indicator ECO ON mode, then ECO OFF is displayed in the screen and the ECO indicator turns off.

If you want to display the ECOMINDER™ indicator ECO again, press the TRIP button more than 1 second in the ECO OFF mode and then ECO ON mode is displayed in the screen.

For more detailed explanations, refer to "Warnings and indicators" in section 4.

D150300AAM

Warnings and indicators

All warning lights are checked by turning the ignition switch ON (do not start the engine). Any light that does not illuminate should be checked by an authorized KIA dealer.

After starting the engine, check to make sure that all warning lights are off. If any warning lights are still on, this indicates a situation that needs attention. When releasing the parking brake, the brake system warning light should go off. The fuel warning light will stay on if the fuel level is low.

D150302AUN

Air bag warning light

This warning light will illuminate for approximately 6 seconds each time you turn the ignition switch to the ON position.

This light also comes on when the Supplement Restraint System (SRS) is not working properly. If the air bag warning light does not come on, or continuously remains on after operating for about 6 seconds when you turned the ignition switch to the ON position or started the engine, or if it comes on while driving, have the SRS inspected by an authorized KIA dealer.

D150303AHM-U1

Anti-lock brake system (ABS) warning light

This warning light illuminates if the ignition switch is turned ON and goes off in approximately 3 seconds if the system is operating normally.

If the ABS warning light remains on, comes on while driving, or does not come on when the ignition switch is turned to the ON position, this indicates that the ABS may have malfunctioned.

If this occurs, have your vehicle checked by an authorized KIA dealer as soon as possible. The normal braking system will still be operational, but without the assistance of the anti-lock brake system.

FarmaSOS.com

Electronic brake force distribution (EBD) system warning light

If these two warning lights illuminate at the same time while driving, your vehicle's ABS and EBD system may have malfunctioned.

In this case, your ABS and regular brake system may not work normally. Have the vehicle checked by an authorized KIA dealer as soon as possible.

⚠ WARNING

If both ABS and brake warning lights are on and stay on, your vehicle's brake system will not work normally during sudden braking. In this case, avoid high speed driving and abrupt braking. Have your vehicle checked by an authorized KIA dealer as soon as possible.

✻ NOTICE

If the ABS warning light or EBD warning light is on and stays on, the speedometer or odometer/tripmeter may not work. In this case, have your vehicle checked by an authorized KIA dealer as soon as possible.

امداد خودرو فارما
تلفن شبانه روزی: ۰۲۱-۸۸۸۶۲۰۸۵
FarmaSOS.com

D150304ATD-EU

Seat belt warning

As a reminder to the driver, the seat belt warning light will blink for approximately 6 seconds each time you turn the ignition switch ON, regardless of belt fastening.

If the driver's seat belt is not fastened when the ignition switch is turned on, the seat belt warning light and the seat belt warning chime will operate for approximately 6 seconds. But if it is refastened within the 6 seconds, the warning light will blink till the 6 seconds and the warning chime will turn off immediately.

If the driver's seat belt is disconnected after the ignition switch is turned to the ON position, the seat belt warning light will blink for approximately 6 seconds. But if it is fastened within the 6 seconds the warning light will turn off immediately.

If the driver's seat belt is not fastened when the vehicle speed exceeds 10 km/h (6 mph), the seat belt warning light and chime will operate approximately 11 times with a pattern of 6 seconds on and 24 seconds off until the belt is fastened or the vehicle speed decreases below 5 km/h (3 mph).

D150305ATD

Turn signal indicator

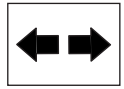

The blinking green arrows on the instrument panel show the direction indicated by the turn signals. If the arrow comes on but does not blink, blinks more rapidly than normal, or does not illuminate at all, it indicates a malfunction in the turn signal system. You should consult your dealer for repairs.

This indicator also blinks when the hazard warning switch is turned on.

D150306AUN

High beam indicator

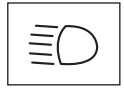

This indicator illuminates when the headlights are on and in the high beam position or when the turn signal lever is pulled into the Flash-to-Pass position.

D150307AHM

Engine oil pressure warning light

This warning light indicates the engine oil pressure is low.

If the warning light illuminates while driving:

1. Drive safely to the side of the road and stop.
2. With the engine off, check the engine oil level. If the level is low, add oil as required.

If the warning light remains on after adding oil or if oil is not available, call an authorized KIA dealer.

تلفن شبانه روزی: ۰۲۱-۸۸۴۲۰۸۵

⚠ CAUTION

If the engine is not stopped immediately after the engine oil pressure warning light is illuminated, severe damage could result.

Farnad206.com

⚠ CAUTION

If the oil pressure warning light stays on while the engine is running, serious engine damage may result. The oil pressure warning light comes on whenever there is insufficient oil pressure. In normal operation, it should come on when the ignition switch is turned on, then go out when the engine is started. If the oil pressure warning light stays on while the engine is running, there is a serious malfunction.

If this happens, stop the vehicle as soon as it is safe to do so, turn off the engine and check the oil level. If the oil level is low, fill the engine oil to the proper level and start the engine again. If the light stays on with the engine running, turn the engine off immediately. In any instance where the oil light stays on when the engine is running, the engine should be checked by an authorized KIA dealer before the car is driven again.

D150308ATD

Parking brake & brake fluid warning light

Parking brake warning

This warning light illuminates for 3 seconds after the ignition switch is turned to the ON position and then it will go out.

Also, this light illuminates when the parking brake is applied with the ignition switch in the START or ON position. The warning light should go out when the parking brake is released.

Low brake fluid level warning

If the warning light remains on, it may indicate that the brake fluid level in the reservoir is low.

If the warning light remains on:

1. Drive carefully to the nearest safe location and stop your vehicle.
2. With the engine stopped, check the brake fluid level immediately and add fluid as required. Then check all brake components for fluid leaks.
3. Do not drive the vehicle if leaks are found, the warning light remains on or the brakes do not operate properly. Have the vehicle towed to any authorized KIA dealer for a brake system inspection and necessary repairs.

Your vehicle is equipped with dual-diagonal braking systems. This means you still have braking on two wheels even if one of the dual systems should fail. With only one of the dual systems working, more than normal pedal travel and greater pedal pressure are required to stop the vehicle. Also, the vehicle will not stop in as short a distance with only a portion of the brake system working. If the brakes fail while you are driving, shift to a lower gear for additional engine braking and stop the vehicle as soon as it is safe to do so.

To check bulb operation, check whether the parking brake and brake fluid warning light illuminates when the ignition switch is in the ON position.

تلفن شبانه روزی: ۰۹۱۲۸۸۸۶۰۸۵
FarmaSOS.com

⚠ WARNING

Driving the vehicle with a warning light on is dangerous. If the brake warning light remains on, have the brakes checked and repaired immediately by an authorized KIA dealer.

D150309APB

Front fog light indicator (if equipped)

This indicator comes on when the front fog lights are ON.

D150312AAM

Shift pattern indicator (if equipped)

The indicator displays which automatic transaxle shift position is selected.

D150301ATD-EU

Engine coolant temperature warning light (if equipped)

The warning light shows the temperature of the engine coolant when the ignition switch is ON.

The warning light illuminates if the temperature of the engine coolant is above 120±3°C (248±5.5°F).

Do not continue driving with an overheated engine. If your vehicle overheats, refer to “Overheating” in the Index.

✻ NOTICE

If the engine coolant temperature warning light illuminates, it indicates overheating that may damage the engine.

D150313AHM

Charging system warning light

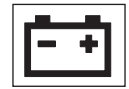

This warning light indicates a malfunction of either the generator or electrical charging system.

If the warning light illuminates while the vehicle is in motion:

1. Drive to the nearest safe location.
2. With the engine off, check the generator drive belt for looseness or breakage.
3. If the belt is adjusted properly, a problem exists somewhere in the electrical charging system. Have an authorized KIA dealer correct the problem as soon as possible.

D150315ATD

Trunk lid (or tailgate) open warning light

This warning light illuminates when the trunk lid (or tailgate) is not closed securely with the ignition switch in any position.

D150316AUN

Door ajar warning light

This warning light illuminates when a door is not closed securely with the ignition switch in any position.

FarmaSOS.com

D150317ATD-EU

Immobilizer indicator

If any of the following occurs in a vehicle equipped with the smart key, the immobilizer indicator illuminates, blinks or goes off.

- When the smart key is in the vehicle, if the ENGINE START/STOP button is in the ACC or ON position, the indicator will illuminate for a few minutes to indicate that you are able to start the engine. However, when the smart key is not in the vehicle, if the ENGINE START/STOP button is pressed, the indicator will blink for a few minutes to indicate that you are not be able to start the engine.
- When the ENGINE START/STOP button changes to the ON position from the ACC position without the smart key in the vehicle, the indicator blinks for a few minutes to indicate that you are not be able to start the engine.
- When the battery is weak, if the ENGINE START/STOP button is pressed, the indicator will blink and you are not able to start the engine. However, you are able to start the engine by inserting the smart key in the smart key holder. If the smart key system related parts have a problem, the indicator will blink.

امداد خودرو فارما
تلفن شبانه روزی: ۰۲۱-۸۸۸۶۲۰۸۵
FarmaSOS.com

D150318ATD

Low fuel level warning light

This warning light indicates the fuel tank is nearly empty. When it comes on, you should add fuel as soon as possible. Driving with the fuel level warning light on or with the fuel level below “E” can cause the engine to misfire and damage the catalytic converter (if equipped).

D150320ATD

Malfunction indicator lamp (MIL) (check engine light)

This indicator is part of the Engine Control System which monitors various emission control system components. If this indicator illuminates while driving, it indicates that a potential malfunction has been detected somewhere in the emission control system.

This indicator will also illuminates when the ignition switch is turned to the ON position, and will go off in a few seconds after the engine is started. If it illuminates while driving, or does not illuminate when the ignition switch is turned to the ON position, take your vehicle to the nearest authorized KIA dealer and have the system checked.

Generally, your vehicle will continue to be drivable, but have the system checked by an authorized KIA dealer promptly.

⚠ CAUTION

- ***Prolonged driving with the Emission Control System Malfunction Indicator Light illuminated may cause damage to the emission control systems which could effect drivability and/or fuel economy.***
- ***If the Emission Control System Malfunction Indicator Light illuminates, potential catalytic converter damage. This could result in loss of engine power. Have the Engine Control System inspected as soon as possible by an authorized KIA dealer.***

تلفن شبانه روزی: ۰۲۱-۸۸۸۶۲۰۸۵
FarmaSOS.com

D150323AUN-EU

ESC indicator (Electronic Stability Control) (if equipped)

The ESC indicator will illuminate when the ignition switch is turned ON, but should go off after approximately 3 seconds. When the ESC is on, it monitors the driving conditions. Under normal driving conditions, the ESC indicator will remain off. When a slippery or low traction condition is encountered, the ESC will operate, and the ESC indicator will blink to indicate the ESC is operating.

The ESC indicator stays on when the ESC may have a malfunction. Take your car to an authorized KIA dealer and have the system checked.

D150324AHM-EU

ESC OFF indicator (if equipped)

The ESC OFF indicator will illuminate when the ignition switch is turned ON, but should go off after approximately 3 seconds. To switch to ESC OFF mode, press the ESC OFF button. The ESC OFF indicator will illuminate indicating the ESC is deactivated.

D150325ATD

Cruise indicator (if equipped)

CRUISE indicator

CRUISE

The indicator illuminates when the cruise control system is enabled.

The cruise indicator in the instrument cluster is illuminated when the cruise control ON/OFF button on the steering wheel is pushed.

The indicator goes off when the cruise control ON/OFF button is pushed again. For more Information, refer to “Cruise control system” in section 5.

Cruise SET indicator

SET

The indicator illuminates when the cruise function switch (SET- or RES+) is ON.

The cruise SET indicator in the instrument cluster illuminates when the cruise control switch (SET- or RES+) is pushed.

The cruise SET indicator does not illuminate when the cruise control switch (CANCEL) is pushed or the system is disengaged.

D150327AUN

Key reminder warning chime (if equipped)

If the driver’s door is opened while the ignition key is left in the ignition switch (ACC or LOCK position), the key reminder warning chime will sound. This is to prevent you from locking your keys in the vehicle. The chime sounds until the key is removed from the ignition switch or the driver’s door is closed.

امداد خودرو فارما
تلفن شبانه روزی: ۰۲۱-۸۸۸۶۲۰۸۵
FarmaSOS.com

D150334ATD

Electric power steering (EPS) system warning light (if equipped)

EPS

This warning light illuminates after the ignition key is turned to the ON position and then it will go off when the engine starts.

This light also comes on when the EPS has malfunctioned. If it comes on while driving, have your vehicle inspected by an authorized KIA dealer.

D150340ATD-EU

ECOMINDER™ indicator (if equipped)

ECO

The ECOMINDER™ indicator is displayed to help you improve fuel efficiency when you are driving.

- The ECOMINDER™ indicator will turn the ECO light green on the instrument panel when you are driving fuel efficiently in the ECO ON mode.

  If you don't want the indicator displayed, you can turn the ECO ON mode to OFF mode by pressing the TRIP button.
- When the instant fuel consumption mode(if equipped) is displayed on the LCD display or the system is not working properly, the indicator turns off. If the indicator turns off when the instant fuel consumption mode or ECO OFF mode is not selected, have the system checked by an authorized KIA dealer as soon as possible.
- The fuel efficiency depends on the driver's driving habit and road condition.
- The system stops operating when the transaxle is in the P (Park), R (Reverse), N (Neutral) position or sports mode, or when the instant fuel consumption mode is selected.

⚠ ECOMINDER™ WARNING

Don't keep watching the "ECO" ECOMINDER™ indicator while driving. It may distract you while driving and cause an accident that could result in severe personal injury.

امداد خودرو فارما
تلفن شبانه روزی: ۰۲۱-۸۸۸۶۲۰۸۵
FarmaSOS.com

D150400ATD

LCD display warning (if equipped)

Door Open

This warning illuminates when a door is not closed securely.

The indicator displays which door is opened.

Low Battery

This warning indicates a malfunction of either the generator or electrical charging system.

If the warning illuminates while the vehicle is in motion:

1. Drive to the nearest safe location.
2. With the engine off, check the generator drive belt for looseness or breakage.
3. If the belt is adjusted properly, a problem exists somewhere in the electrical charging system. Have an authorized KIA dealer correct the problem as soon as possible.

Low Fuel!

This warning indicates the fuel tank is nearly empty. When it comes on, you should add fuel as soon as possible.

Driving with the fuel level warning on or with the fuel level below "E" can cause the engine to misfire and damage the catalytic converter (if equipped).

Key is not in vehicle

If the smart key is not in the vehicle and if any door is opened or closed with the ENGINE START/STOP button in the ACC, ON, or START position, the warning illuminates on the LCD display. Also, the chime sounds for 5 seconds when the smart key is not in the vehicle and the door is closed.

Always have the smart key with you.

Key is not detected

If the smart key is not in the vehicle or is not detected and you press the ENGINE START/STOP button, the warning illuminates on the LCD display for 10 seconds. Also, the immobilizer indicator and the key holder light blinks for 10 seconds.

Low key battery

If the ENGINE START/STOP button is pressed to the OFF position when the smart key in the vehicle discharges, the warning illuminates on the LCD display for about 10 seconds.

Replace the battery with a new one.

Press brake pedal to start engine

If the ENGINE START/STOP button is pressed to the ACC position twice by pressing the button repeatedly without depressing the brake pedal, the warning illuminates on the LCD display for about 10 seconds to indicate that you should depress the brake pedal to start the engine.

Shift to "P" position

If you try to turn off the engine without the shift lever in the P (Park) position, the ENGINE START/STOP button will change to the ACC position. If the button is pressed once more it will change to the ON position. The warning illuminates on the LCD display for about 10 seconds to indicate that you should press the ENGINE START/ STOP button with the shift lever in the P (Park) position to turn off the engine.

امداد خودرو فارما
تلفن شبانه روزی : ۰۲۱-۸۸۸۴۲۰۸۵
FarmaSOS.com

Remove key

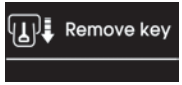

When you turn off the engine with the smart key in the smart key holder, the warning illuminates on the LCD display for about 10 seconds. Also, the smart key holder light blinks for about 10 seconds.

To remove the smart key push the smart key once and pull it out from the smart key holder.

Insert key

If you press the ENGINE START/STOP button while "Key is not detected" illuminates on the LCD display, the warning “Insert key” illuminates for about 10 seconds. Also, the immobilizer indicator and the key holder light blinks for about 10 seconds.

Press start button again

If you can not operate the ENGINE START/STOP button when there is a problem with the ENGINE START/STOP button system, the warning illuminates for 10 seconds and the chime sounds continuously to indicate that you could start the engine by pressing the ENGINE START/STOP button once more.

The chime will stop if the ENGINE START/STOP button system works normally.

If the warning illuminates each time you press the ENGINE START/STOP button, take your vehicle to an authorized KIA dealer and have the system checked.

FarmaSOS.com

Shift to "P" or "N" to start engine

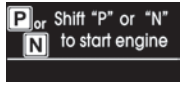

If you try to start the engine with the shift lever not in the P (Park) or N (Neutral) position, the warning illuminates for about 10 seconds on the LCD display.

You can also start the engine with the shift lever in the N (Neutral) position, but for your safety start the engine with the shift lever in the P (Park) position.

Press start button while turn steering

If the steering wheel does not unlock normally when the ENGINE START/STOP button is pressed, the warning illuminates for 10 seconds on the LCD display. Also, the warning chime sounds once and the ENGINE START/STOP button light blinks for 10 seconds.

When you are warned, press the ENGINE START/STOP button while turning the steering wheel right and left.

Check steering wheel lock

If the steering wheel does not lock normally when the ENGINE START/STOP button turns to the OFF position, the warning illuminates for 10 seconds on the LCD display. Also, the ENGINE START/STOP button light blinks for 10 seconds.

امداد خودرو فارما
تلفن شبانه روزی: ۰۲۱-۸۸۸۶۲۰۸۵
FarmaSOS.com

REARVIEW CAMERA (IF EQUIPPED)

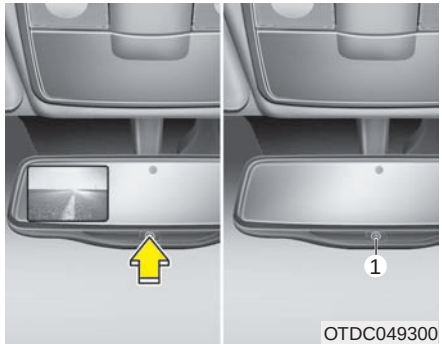

The rearview camera will activate when the back-up light is ON with the ignition switch ON and the shift lever in the R (Reverse) position.

This system is a supplemental system that shows behind the vehicle through the rearview display mirror while backing-up.

The rearview camera may be turned off by pressing the ON/OFF button (1) when the rearview camera is activated.

To turn the camera on again, press the ON/OFF button again when the ignition switch is on and the shift lever in R (Reverse). Also, the camera will turn on automatically whenever the ignition switch is turned off and on again.

⚠ WARNING

- **This system is a supplementary function only. It is the responsibility of the driver to always check the inside/outside rearview mirrors and the area behind the vehicle before and while backing up because there is a dead zone that can't be seen by the camera.**
- **Always keep the camera lens clean. If lens is covered with foreign matter, the camera may not operate normally.**

FarmaOS.com

HAZARD WARNING FLASHER

D180000AHM

The hazard warning flasher should be used whenever you find it necessary to stop the car in a hazardous location. When you must make such an emergency stop, always pull off the road as far as possible.

The hazard warning lights are turned on by pushing in the hazard switch. Both turn signal lights will blink. The hazard warning lights will operate even though the key is not in the ignition switch.

To turn the hazard warning lights off, push the switch again.

LIGHTING

D190100APB

Battery saver function

- The purpose of this feature is to prevent the battery from being discharged. The system automatically turns off the parking lights when the driver removes the ignition key and opens the driver- side door.
- With this feature, the parking lights will turn off automatically if the driver parks on the side of the road at night.

  If necessary, to keep the lights on when the ignition key is removed, perform the following :

  1) Open the driver-side door.
  2) Turn the parking lights OFF and ON again using the light switch on the steering column.

⚠ CAUTION

If the driver gets out of the vehicle through other doors (except driver's door), the battery saver function does not operate. Therefore, It causes the battery to be discharged. In this case, make sure to turn off the lamp before getting out of the vehicle.

OXM049110

D190400ATD-EU

Lighting control

The light switch has a Headlight and a Parking light position.

To operate the lights, turn the knob at the end of the control lever to one of the following positions:

(1) OFF position
(2) Parking light position
(3) Headlight position
(4) Auto light position (if equipped)

OAM049041

D190401ATD

Parking light position ( )

When the light switch is in the parking light position (1st position), the tail, position, license and instrument panel lights will turn ON.

امداد خودرو فارما
تلفن شبانه روزی: ۰۳۱-۸۸۴۴۰۸۵
FarmaSOS.com

OAM049042

D190402ATD

Headlight position (≡D)

When the light switch is in the headlight position (2nd position) the head, tail, position, license and instrument panel lights will turn ON.

✻ NOTICE

The ignition switch must be in the ON position to turn on the headlights.

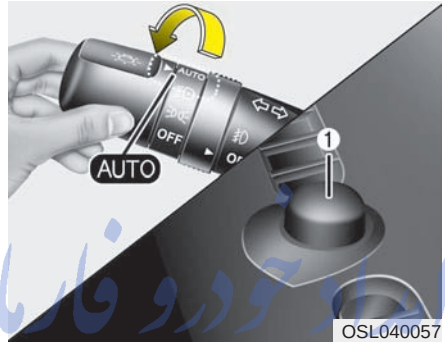

OSL040057

Auto light position (if equipped)

When the light switch is in the AUTO light position, the taillights and headlights will turn ON or OFF automatically depending on the amount of light outside the vehicle.

⚠ CAUTION

- ***Never place anything over sensor (1) located on the instrument panel. This will ensure better auto-light system control.***
- ***Don't clean the sensor using a window cleaner. The cleaner may leave a light film which could interfere with sensor operation.***
- ***If your vehicle has window tint or other types of metallic coating on the front windshield, the Auto light system may not work properly.***

FarmaSOS.com

OAM049044

D190500AUN

High beam operation

To turn on the high beam headlights, push the lever away from you. Pull it back for low beams.

The high-beam indicator will light when the headlight high beams are switched on.

To prevent the battery from being discharged, do not leave the lights on for a prolonged time while the engine is not running.

OAM049043

To flash the headlights, pull the lever towards you. It will return to the normal (low-beam) position when released. The headlight switch does not need to be on to use this flashing feature.

امداد خودرو فارما
تلفن شبانه روزی: ۰۲۱-۸۸۶۲۰۸۵
FarmaSOS.com

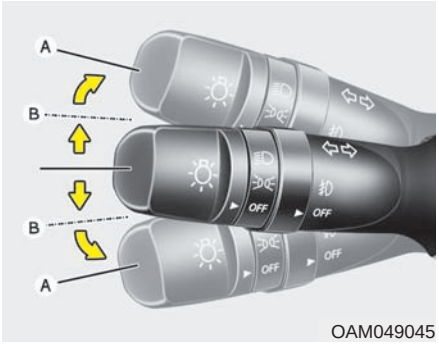

OAM049045

D190600AUN-U1

Turn signals and lane change signals

The ignition switch must be on for the turn signals to function. To turn on the turn signals, move the lever up or down (A). The green arrow indicators on the instrument panel indicate which turn signal is operating. They will self-cancel after a turn is completed. If the indicator continues to flash after a turn, manually return the lever to the OFF position.

To signal a lane change, move the turn signal lever slightly and hold it in position (B). The lever will return to the OFF position when released.

If an indicator stays on and does not flash or if it flashes abnormally, one of the turn signal bulbs may be burned out and will require replacement.

✻ NOTICE

If an indicator flash is abnormally quick or slow, a bulb may be burned out or have a poor electrical connection in the circuit.

OAM049046N

D190700ATD-EU

Front fog light (if equipped)

Fog lights are used to provide improved visibility when visibility is poor due to fog, rain or snow etc. The fog lights will turn on when the fog light switch (1) is turned to the on position after the headlights are turned on.

To turn off the fog lights, turn the switch (1) to the off position.

⚠ CAUTION

When in operation, the fog lights consume large amounts of vehicle electrical power. Only use the fog lights when visibility is poor.

D190900AUN-EU

Daytime running light

Daytime Running Lights (DRL) can make it easier for others to see the front of your vehicle during the day. DRL can be helpful in many different driving conditions, and it is especially helpful after dawn and before sunset.

The DRL system will make the headlights turn OFF when:

1. The headlight switch is ON.
2. The parking brake is applied.
3. Engine stops.

امداد خودرو فارما
FarmaSOS.com

WIPERS AND WASHERS

■ 4 door, 2 door vehicle

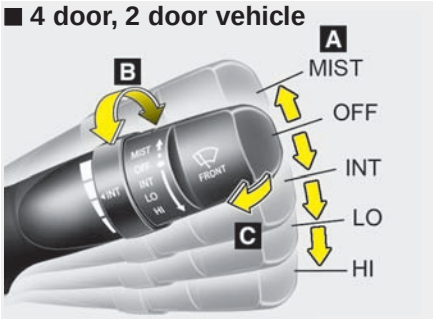

OAM049100L

■ 5 door vehicle

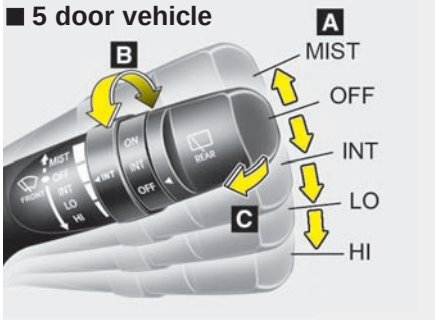

OXM049231L

Windshield wiper/washer

A : Wiper speed control (front)

- MIST – Single wipe
- OFF – Off
- INT – Intermittent wipe*
- LO – Normal wiper speed
- HI – Fast wiper speed

B : Intermittent wipe time adjustment

C : Wash with brief wipes (front)

امداد خودرو فارما
تلفن شبانه روزی: ۰۲۱-۸۸۸۶۲۰۸۵
FarmaSOS.com

■ 5 door vehicle

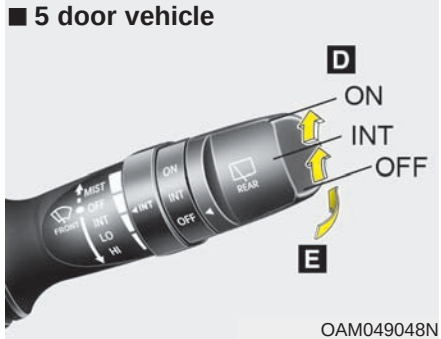

OAM049048N

Rear window wiper/washer

D : Rear wiper control

- ON – Continuous wipe
- INT – Intermittent wipe*
- OFF – Off

E : Wash with brief wipes (rear)

* if equipped

D200100ATD

Windshield wipers

Operates as follows when the ignition switch is turned ON.

MIST : For a single wiping cycle, move the lever upward and release it. The wipers will operate continuously if the lever is held in this position.

OFF : Wiper is not in operation

INT : Wiper operates intermittently at the same wiping intervals. Use this mode in a light rain or mist. To vary the speed setting, turn the speed control knob.

LO : Normal wiper speed

HI : Fast wiper speed

✻ NOTICE

If there is heavy accumulation of snow or ice on the windshield, defrost the windshield for about 10 minutes, or until the snow and/or ice is removed before using the windshield wipers to ensure proper operation.

D200200ASA

Windshield washers

In the OFF position, pull the lever gently toward you to spray washer fluid on the windshield and to run the wipers 1-3 cycles.

Use this function when the windshield is dirty.

The spray and wiper operation will continue until you release the lever. If the washer does not work, check the washer fluid level.

If the fluid level is not sufficient, you will need to add appropriate non-abrasive windshield washer fluid to the washer reservoir.

The reservoir filler neck is located in the front of the engine compartment on the passenger side.

FarmaSOS.com

⚠ CAUTION

To prevent possible damage to the washer pump, do not operate the washer when the fluid reservoir is empty.

⚠ WARNING

Do not use the washer in freezing temperatures without first warming the windshield with the defrosters; the washer solution could freeze on the windshield and obscure your vision.

⚠ CAUTION

- ***To prevent possible damage to the wipers or windshield, do not operate the wipers when the windshield is dry.***
- ***To prevent damage to the wiper blades, do not use gasoline, kerosene, paint thinner, or other solvents on or near them.***
- ***To prevent damage to the wiper arms and other components, do not attempt to move the wipers manually.***

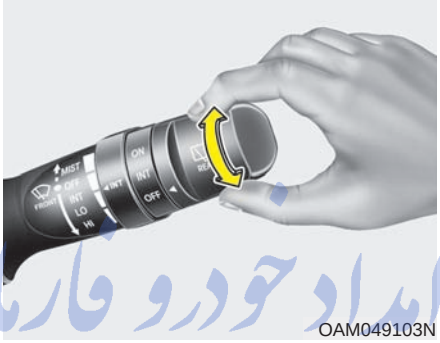

OAM049103N

D200300AAM

Rear window wiper and washer switch (5 door vehicle)

The rear window wiper and washer switch is located at the end of the wiper and washer switch lever. Turn the switch to the desired position to operate the rear wiper and washer.

ON - Normal wiper operation

INT - Intermittent wiper operation (if equipped)

OFF - Wiper is not in operation

OXM049125

Push the lever away from you to spray rear washer fluid and to run the rear wipers 1~3 cycles. The spray and wiper operation will continue until you release the lever.

FarmaSOS.com

INTERIOR LIGHT

D210000AEN

⚠ CAUTION

Do not use the interior lights for extended periods when the engine is not running.

It may cause battery discharge.

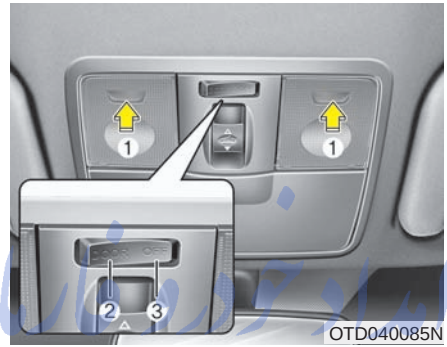

OTD040085N

D210100ATD

Map lamp (if equipped)

1. Push the lens to turn the light on or off.
2. DOOR : The light comes on or goes off when a door is opened or closed.
3. OFF : The light stays off at all times even when a door is opened.
   When the light is turned on with the lens(1) pressed, the light is not turned off even with the switch(3) in the OFF position.

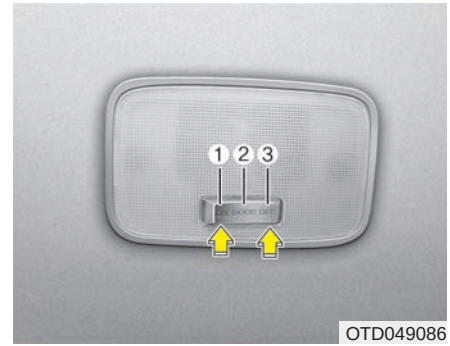

OTD049086

D210200ATD

Room lamp (if equipped)

1. ON : The light stays on at all times.
2. DOOR : The light comes on or off when a door is opened or closed.
3. OFF : The light stays off at all times even when a door is opened.

⚠ CAUTION

Do not leave the switch in the ON position for an extended period of time when the vehicle is not running.

FarmaDOC.com

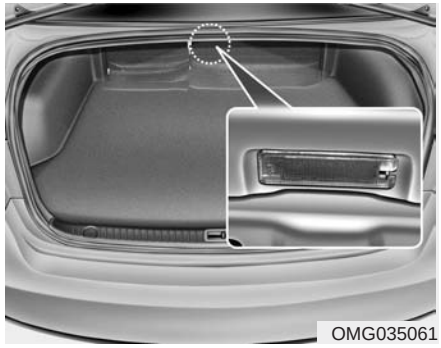

D210300ABH

Trunk room lamp (if equipped)

The trunk room lamp comes on when the trunk lid is opened.

DEFROSTER

D220000AUN

⚠ CAUTION

To prevent damage to the conductors bonded to the inside surface of the rear window, never use sharp instruments or window cleaners containing abrasives to clean the window.

✻ NOTICE

If you want to defrost and defog the front windshield, refer to "Windshield Defrosting and Defogging" in this section.

امداد خودرو ماما
تلفن شبانه روزی: ۰۲۱-۸۸۸۶۲۰۸۵
FarmaSOS.com

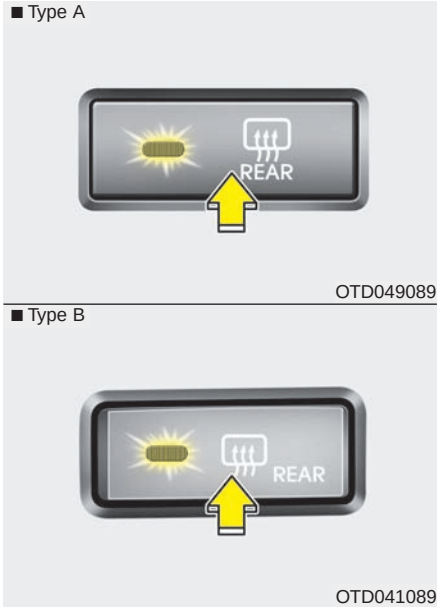

D220100ATD

Rear window defroster

The defroster heats the window to remove frost, fog and thin ice from the interior and exterior of the rear window, while the engine is running.

To activate the rear window defroster, press the rear window defroster button located in the center facia switch panel. The indicator on the rear window defroster button illuminates when the defroster is ON.

If there is heavy accumulation of snow on the rear window, brush it off before operating the rear defroster.

The rear window defroster automatically turns off after approximately 20 minutes or when the ignition switch is turned off. To turn off the defroster manually, press the rear window defroster button again.

D220101AEN

Outside mirror defroster (if equipped)

If your vehicle is equipped with the outside rearview mirror defrosters, they will operate at the same time you turn on the rear window defroster.

امداد خودرو فارما

تلفن شبانه روزی: ۰۲۱-۸۸۸۶۲۰۸۵

FarmaSOS.com

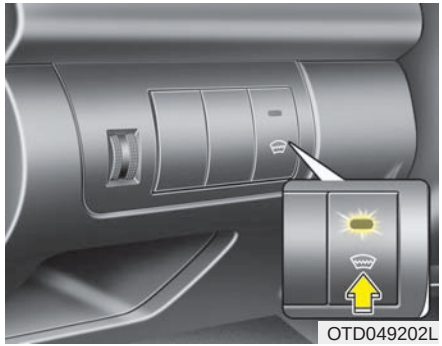

D220200ATD

Front wiper deicer (if equipped)

The engine must be running to enable this feature. To activate the front wiper deicer, press the front wiper deicer button. The indicator on the button illuminates when the deicer is ON.

The front wiper deicer automatically turns off after 20 minutes or when the ignition switch is turned off. To turn off the deicer, press the front wiper deicer button again.

MANUAL CLIMATE CONTROL SYSTEM (IF EQUIPPED)

1. Air conditioning button*
2. Rear window defroster button
3. Air intake control button
4. Fan speed control knob
5. Mode selection knob
6. Temperature control knob

* : if equipped

OTD049090

D230000ATD

امداد خودرو فارما
تلفن پاسخ ۰۲۱۸۸۶۲۰۸۵
FarmaSOS.com

D230100ATD

Heating and air conditioning

1. Start the engine.
2. Set the mode to the desired position.
   To improve the effectiveness of heating and cooling :
   - Heating:
   - Cooling:
3. Set the temperature control to the desired position.
4. Set the air intake control to the outside (fresh) air or recirculated air position.
5. Set the fan speed control to the desired speed.
6. If air conditioning is desired, turn the air conditioning system (if equipped) on.

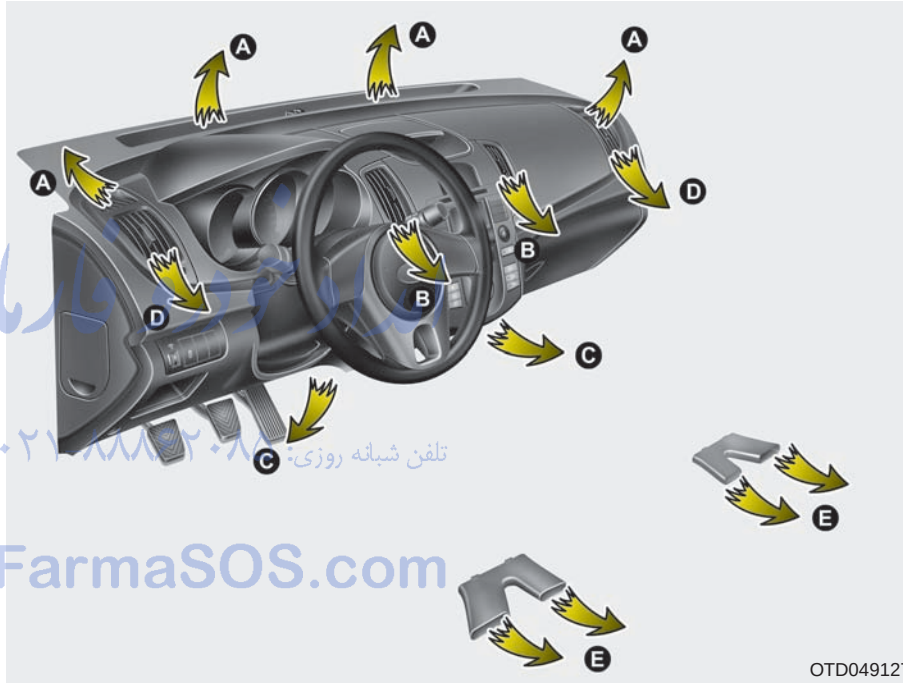

تلفن شبانه روزی: ۰۲۱۸۸۸۳۲۰۸۶
FarmaSOS.com

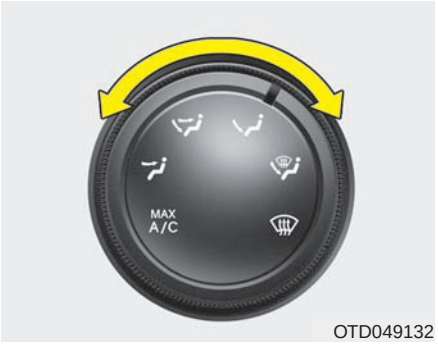

OTD049132

D230101ATD

Mode selection

The mode selection knob controls the direction of the air flow through the ventilation system.

Air can be directed to the floor, dashboard outlets, or windshield. Six symbols are used to represent MAX A/C, Face, Bi-Level, Floor, Floor-Defrost and Defrost air position.

The MAX A/C mode is used to cool the inside of the vehicle faster.

MAX A/C-Level (B, D)

Air flow is directed toward the upper body and face.

In this mode, the air conditioning and the recirculated air position will be selected automatically.

Face-Level (B, D)

Air flow is directed toward the upper body and face. Additionally, each outlet can be controlled to direct the air discharged from the outlet.

Bi-Level (B, D, E, C)

Air flow is directed towards the face and the floor.

Floor-Level (C, A, D, E)

Most of the air flow is directed to the floor, with a small amount of the air being directed to the windshield and side window defrosters.

Floor/Defrost-Level (A, C, D, E)

Most of the air flow is directed to the floor and the windshield with a small amount directed to the side window defrosters.

Defrost-Level (A, D)

Most of the air flow is directed to the windshield with a small amount of air directed to the side window defrosters.

امداد خودرو فارما
تلفن شبانه روزی: ۰۲۱-۸۸۸۶۲۰۸۵
FarmaSOS.com

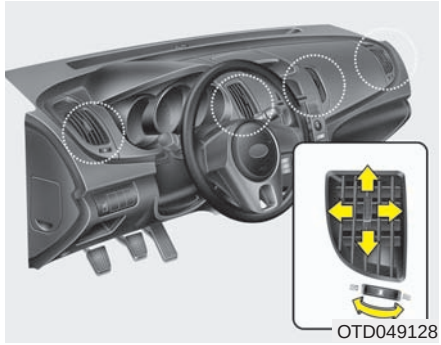
OTD049128

Instrument panel vents

The outlet vents can be opened or closed separately using the thumbwheel.

Also, you can adjust the direction of air delivered from these vents using the vent control lever as shown.

OTD049094

D230102APB

Temperature control

The temperature control knob allows you to control the temperature of the air flowing from the ventilation system. To change the air temperature in the passenger compartment, turn the knob to the right for warm air or left for cooler air.

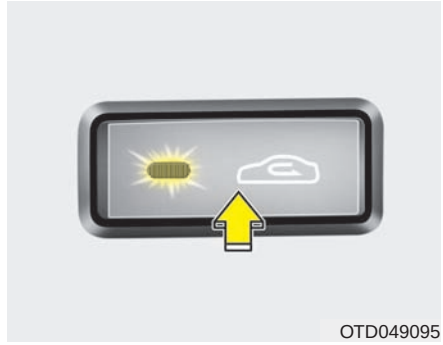
OTD049095

D230103APB

Air intake control

This is used to select outside (fresh) air position or recirculated air position.

To change the air intake control position, push the control button.

FarmaSOS.com

Recirculated air position

The indicator light on the button illuminates when the recirculated air position is selected.

With the recirculated air position selected, air from passenger compartment will be drawn through the heating system and heated or cooled according to the function selected.

Outside (fresh) air position

The indicator light on the button will not illuminate when the outside (fresh) air position is selected.

With the outside (fresh) air position selected, air enters the vehicle from outside and is heated or cooled according to the function selected.

✻ NOTICE

Prolonged operation of the heater in the recirculated air position (without air conditioning selected) may cause fogging of the windshield and side windows and the air within the passenger compartment may become stale.

In addition, prolonged operation of the air conditioning with the recirculated air position selected will result in excessively dry air in the passenger compartment.

امداد خودرو فارما
تلفن شبانه روزی: ۰۲۱-۸۸۸۶۲۰۸۵
FarmaSOS.com

⚠ WARNING

- **Continuous use of the climate control system in the recirculated air position may allow humidity to increase inside the vehicle which may fog the glass and obscure visibility.**
- **Do not sleep in a vehicle with the air conditioning or heating system on. It may cause serious harm or death due to a drop in the oxygen level and/or body temperature.**
- **Continuous use of the climate control system in the recirculated air position can cause drowsiness or sleepiness, and loss of vehicle control. Set the air intake control to the outside (fresh) air position as much as possible while driving.**

OTD049098

D230104AUN

Fan speed control

The ignition switch must be in the ON position for fan operation.

The fan speed control knob allows you to control the fan speed of the air flowing from the ventilation system. To change the fan speed, turn the knob to the right for higher speed or left for lower speed.

Setting the fan speed control knob to the “0” position turns off the fan.

OTD049099

D230105AHM

Air conditioning (if equipped)

Press the A/C button to turn the air conditioning system on (indicator light will illuminate). Press the button again to turn the air conditioning system off.

FarmaSOS.com

System operation

D230501AUN

Ventilation

1. Set the mode to the position.
2. Set the air intake control to the outside (fresh) air position.
3. Set the temperature control to the desired position.
4. Set the fan speed control to the desired speed.

D230502APB

Heating

1. Set the mode to the position.
2. Set the air intake control to the outside (fresh) air position.
3. Set the temperature control to the desired position.
4. Set the fan speed control to the desired speed.
5. If dehumidified heating is desired, turn the air conditioning system (if equipped) on.

- If the windshield fogs up, set the mode to the , position.

Operation Tips

- To prevent dust or unpleasant fumes from entering the vehicle through the ventilation system, temporarily set the air intake control to the recirculated air position. Be sure to return the control to the fresh air position when the irritation has passed to keep fresh air in the vehicle. This will help keep the driver alert and comfortable.
- Air for the heating/cooling system is drawn in through the grilles just ahead of the windshield. Care should be taken that these are not blocked by leaves, snow, ice or other obstructions.
- To prevent interior fog on the windshield, set the air intake control to the fresh air position and fan speed to the desired position, turn on the air conditioning system, and adjust the temperature control to desired temperature.

D230503ATD

Air conditioning (if equipped)

All KIA Air Conditioning Systems are filled with environmentally friendly R-134a refrigerant which does not damage the ozone layer.

1. Start the engine. Push the air conditioning button.
2. Set the mode to the position.
3. Set the air intake control to the recirculated air position. However, prolonged operation of the reticulated air position will excessively dry the air. In this case, change the air position.
4. Adjust the fan speed control and temperature control to maintain maximum comfort.

- When maximum cooling is desired, set the temperature control to the extreme left position, set the mode control to the MAX A/C position, then set the fan speed control to the highest speed.

امداد خودرو فارما
تلفن شبانه روزی: ۰۲۱-۸۸۸۶۲۰۸۵
FarmaSOS.com

✻ NOTICE

- **While using the air conditioning system, monitor the temperature gauge closely while driving up hills or in heavy traffic when outside temperatures are high. Air conditioning system operation may cause engine overheating. Continue to use the blower fan but turn the air conditioning system off if the temperature gauge indicates engine overheating.**
- **While opening the windows in humid weather air conditioning may create water droplets inside the vehicle. Since excessive water droplets may cause damage to electrical equipment, air conditioning should only be used with the windows closed.**

Air conditioning system operation tips

- If the vehicle has been parked in direct sunlight during hot weather, open the windows for a short time to let the hot air inside the vehicle escape.
- To help reduce moisture inside of the windows on rainy or humid days, decrease the humidity inside the vehicle by operating the air conditioning system.
- During air conditioning system operation, you may occasionally notice a slight change in engine speed as the air conditioning compressor cycles. This is a normal system operation characteristic.
- Use the air conditioning system every month only for a few minutes to ensure maximum system performance.
- When using the air conditioning system, you may notice clear water dripping (or even puddling) on the ground under the passenger side of the vehicle. This is a normal system operation characteristic.
- Operating the air conditioning system in the recirculated air position provides maximum cooling, however, continual operation in this mode may cause the air inside the vehicle to become stale.
- During cooling operation, you may occasionally notice a misty air flow because of rapid cooling and humid air intake. This is a normal system operation characteristic.

امداد خودرو فارما
تلفن شبانه روزی: ۰۲۱-۸۸۸۶۲۰۸۵
FarmaSOS.com

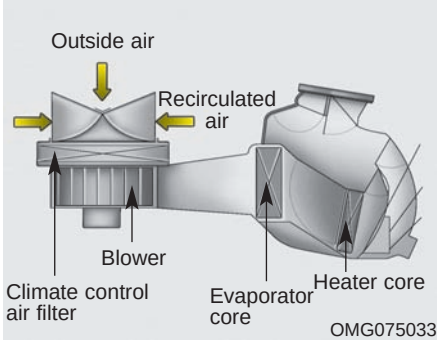

D230300AHM-EC

Climate control air filter

The climate control air filter installed behind the glove box filters the dust or other pollutants that come into the vehicle from the outside through the heating and air conditioning system. If dust or other pollutants accumulate in the filter over a period of time, the air flow from the air vents may decrease, resulting in moisture accumulation on the inside of the windshield even when the outside (fresh) air position is selected. If this happens, have the climate control air filter replaced by an authorized KIA dealer.

✻ NOTICE

- **If the vehicle is being driven in severe conditions such as dusty, rough roads, more frequent climate control air filter inspections and changes are required.**
- **When the air flow rate suddenly decreases, the system should be checked at an authorized KIA dealer.**

D230400ATD

Checking the amount of air conditioner refrigerant and compressor lubricant

When the amount of refrigerant is low, the performance of the air conditioning is reduced. Overfilling also has a negative influence on the air conditioning system.

Therefore, if abnormal operation is found, have the system inspected by an authorized KIA dealer.

✻ NOTICE

It is important that the correct type and amount of oil and refrigerant is used. Otherwise, damage to the compressor and abnormal system operation may occur.

⚠ WARNING

The air conditioning system should be serviced by an authorized KIA dealer. Improper service may cause serious injury to the person performing the service.

امداد خودرو فارما
FarmaSOS.com

AUTOMATIC CLIMATE CONTROL SYSTEM (IF EQUIPPED)

1. Front windshield defroster button
2. Climate control display
3. Rear windshield defroster button
4. Fan speed control switch
5. AUTO (automatic control) button
6. OFF button
7. Temperature control knob
8. Air conditioning button
9. Mode selection button
10. Recirculated air position button
11. Outside air position button

OTD041101

D240000ATD

امداد خودرو فارما
تلفن نمونه دوری: ۰۸۵-۳۶۲۰۸۸۱
FarmaSOS.com

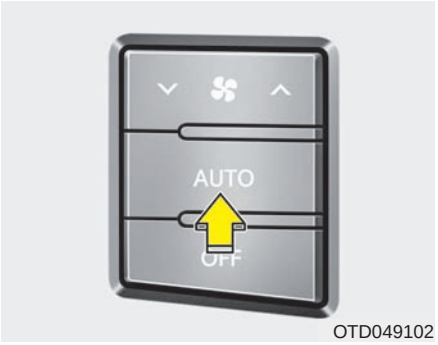

OTD049102

D240100ATD-EU

Automatic heating and air conditioning

The automatic climate control system is controlled by simply setting the desired temperature.

The Full Automatic Temperature Control (FATC) system automatically controls the heating and cooling system as follows;

1. Press the AUTO button. The modes, fan speeds, air intake and air-conditioning will be controlled automatically by setting the temperature.
2. Set the temperature control knob to the desired temperature.

   If the temperature is set to the lowest setting (Lo), the air conditioning system will operate continuously.
3. To turn the automatic operation off, select any button or switch of the following:
   - Mode selection button
   - Air conditioning button
   - Front windshield defroster button
   - Air intake control button
   - Fan speed control switch

   The selected function will be controlled manually while other functions operate automatically.

امداد خودرو شما
تلفن شبانه روزی: ۰۲۱-۸۸۸۶۲۰۸۵
FarmaSOS.com

For your convenience and to improve the effectiveness of the climate control, use the AUTO button and set the temperature to 23°C (73°F).

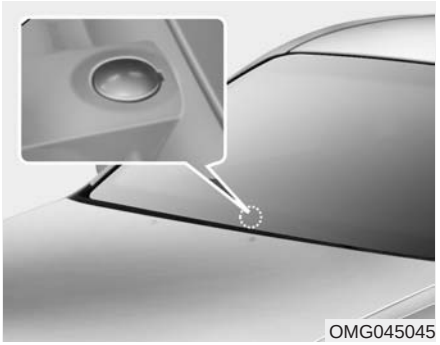
OMG045045

✻ NOTICE

Never place anything over the sensor located on the instrument panel to ensure better control of the heating and cooling system.

D240200ATD

Manual heating and air conditioning

The heating and cooling system can be controlled manually by pushing buttons other than the AUTO button. In this case, the system works sequentially according to the order of buttons selected.

1. Start the engine.
2. Set the mode to the desired position.
   To improve the effectiveness of heating and cooling :
   - Heating:
   - Cooling:
3. Set the temperature control to the desired position.
4. Set the air intake control to the outside (fresh) air or recirculated air position.
5. Set the fan speed control to the desired speed.
6. If air conditioning is desired, turn the air conditioning system on.

Press the AUTO button in order to convert to full automatic control of the system.

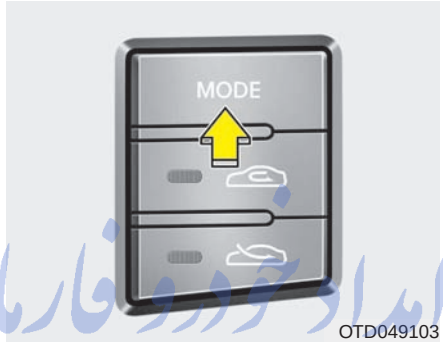

OTD049103

D240201ATD

Mode selection

The mode selection button controls the direction of the air flow through the ventilation system.

Every time you press the mode selection button, the mode will change as follows:

Refer to the illustration in the “Manual climate control system”.

Face-Level (B, D)

Air flow is directed toward the upper body and face. Additionally, each outlet can be controlled to direct the air discharged from the outlet.

Bi-Level (B, D, C, E)

Air flow is discharged towards the face and floor.

Floor-Level (C, E, A, D)

Most of the air flow is directed to the floor, with a small amount of the air being directed to the windshield and side window defroster.

Floor/Defrost-Level (A, C, E, D)

Most of the air flow is directed to the floor and the windshield with a small amount directed to the side window defrosters.

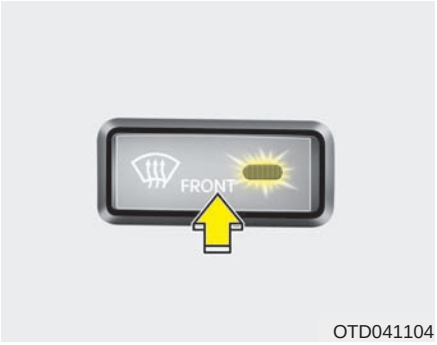

OTD041104

Defrost-level (A, D)

Most of the air flow is directed to the windshield with a small amount of air directed to the side window defrosters.

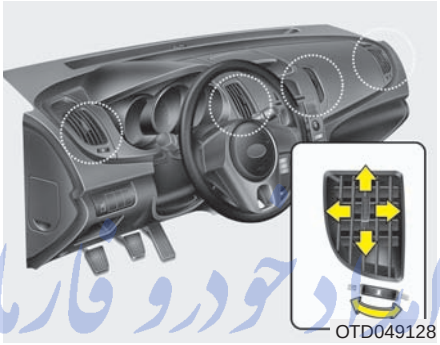
OTD049128

Instrument panel vents

The outlet vents can be opened or closed separately using the thumbwheel.

Also, you can adjust the direction of air delivered from these vents using the vent control lever as shown.

FarmaSOS.com

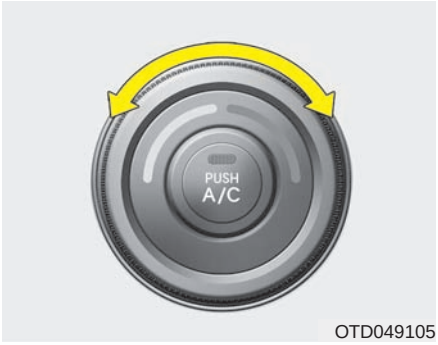

OTD049105

D240202ATD-EC

Temperature control

The temperature will increase to the maximum (HI) by turning the knob to the extreme right.

The temperature will decrease to the minimum (Lo) by turning the knob to the extreme left.

When turning the knob, the temperature will increase or decrease by 0.5°C/1°F.

Temperature conversion

You can switch the temperature mode between Fahrenheit to Centigrade as follows:

While pressing the OFF button, press the AUTO button for 3 seconds or more.

The display will change from Fahrenheit to Centigrade, or from Centigrade to Fahrenheit.

If the battery has been discharged or disconnected, the temperature mode display will reset to Centigrade.

OTD049203L

D240207AUN

Outside thermometer

The current outside temperature is displayed in 1°C (1°F) increments. The temperature range is between -40°C ~ 60°C (-40°F~140°F).

- The outside temperature on the display may not change immediately like a general thermometer to prevent the driver from being inattentive.

D240203ATD

Air intake control

The air intake control is used to select outside (fresh) air position or recirculated air position.

To change the air intake control position, push the control button.

FarsiOS.com

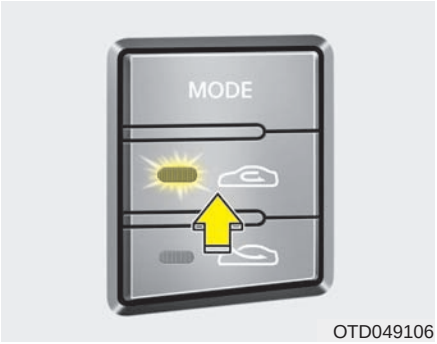

OTD049106

Recirculated air position

The indicator light on the button illuminates when the recirculated air position is selected.

With the recirculated air position selected, air from the passenger compartment will be drawn through the heating system and heated or cooled according to the function selected.

OTD049107

Outside (fresh) air position

The indicator light on the button illuminates when the outside (fresh) air position is selected.

With the outside (fresh) air position selected, air enters the vehicle from outside and is heated or cooled according to the function selected.

امداد خودرو فارما
تلفن شبانه روزی: ۰۲۱-۸۸۸۴۲۰۸۵
FarmaSOS.com

✻ NOTICE

Prolonged operation of the heating in recirculated air position will cause fogging of the windshield and side windows and the air within the passenger compartment will become stale.
In addition, prolonged operation of the air conditioning with the recirculated air position selected, will result in excessively dry air in the passenger compartment.

⚠ WARNING

- **Continuous use of the climate control system in the recirculated air position may allow humidity to increase inside vehicle which may fog the glass and obscure visibility.**
- **Do not sleep in a vehicle with air conditioning or heating system on. It may cause serious harm or death due to a drop in the oxygen level and/or body temperature.**
- **Continuous use of the climate control system in the reciruclated air position can cause drowsiness or sleepiness, and loss of vehicle control. Set the air intake control to the outside (fresh) air position as much as possible while driving.**

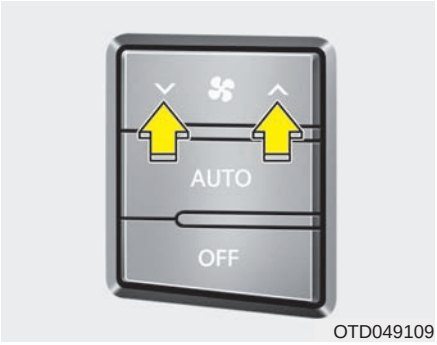

OTD049109

D240205ATD

Fan speed control

The fan speed can be set to the desired speed by pressing the fan speed control switch.

To change the fan speed press the ∧ part of the switch for higher speed or press the ∨ part of the switch for lower speed.

To turn the fan speed control off, press the OFF button.

OTD049111

D240206AHM

Air conditioning

Press the A/C button to turn the air conditioning system on (indicator light will illuminate).

Press the button again to turn the air conditioning system off.

FarmaSOS.com

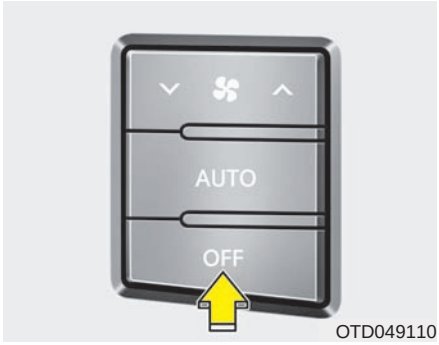

OTD049110

D240208ATD

OFF mode

Press the OFF button to turn off the air climate control system. However, you can still operate the mode and air intake buttons as long as the ignition switch is in the ON position.

WINDSHIELD DEFROSTING AND DEFOGGING

D250000AUN

⚠ WARNING - Windshield heating

Do not use the or position during cooling operation in extremely humid weather. The difference between the temperature of the outside air and the windshield could cause the outer surface of the windshield to fog up, causing loss of visibility. In this case, set the mode selection knob or button to the position and fan speed control knob or button to a lower speed.

- For maximum defrosting, set the temperature control to the extreme right/hot position and the fan speed control to the highest speed.
- If warm air to the floor is desired while defrosting or defogging, set the mode to the floor-defrost position.
- Before driving, clear all snow and ice from the windshield, rear window, outside rear view mirrors, and all side windows.
- Clear all snow and ice from the hood and air inlet in the cowl grill to improve heater and defroster efficiency and to reduce the probability of fogging up the inside of the windshield.

تلفن شبانه روزی: ۰۲۱-۸۸۸۶۲۰۸۵
FarmaSOS.com

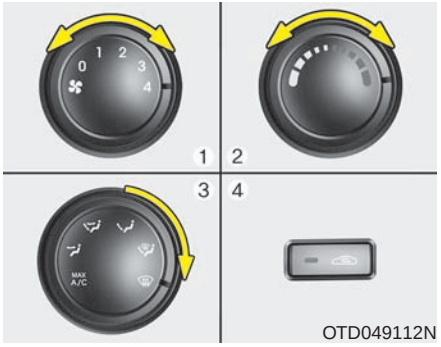

Manual climate control system

D250101AFD

To defog inside windshield

1. Select any fan speed except “0” position.
2. Select desired temperature.
3. Select the or position.
4. The outside (fresh) air will be selected automatically.

If the outside (fresh) air position is not selected automatically, press the corresponding button manually.

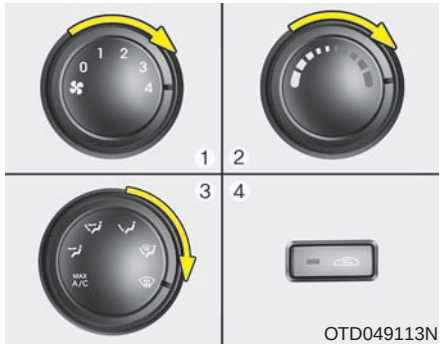

D250102AFD

To defrost outside windshield

1. Set the fan speed to the highest (extreme right) position.
2. Set the temperature to the extreme hot position.
3. Select the position.
4. The outside (fresh) air will be selected automatically.

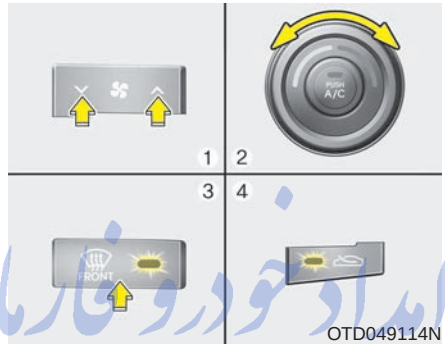

Automatic climate control system

D250201ATD

To defog inside windshield

1. Select desired fan speed.
2. Select desired temperature.
3. Press the defroster button ( ).
4. The outside (fresh) air position will be selected automatically.

If the outside (fresh) air position is not selected automatically, adjust the corresponding button manually.

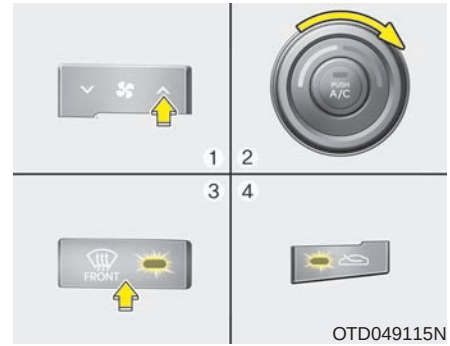

D250202ATD

To defrost outside windshield

1. Set the fan speed to the highest position.
2. Set the temperature to the extreme hot (HI) position.
3. Press the defroster button ( ).
4. The outside (fresh) air position will be selected automatically.

امداد خودرو فارما
تلفن شبانه روزی: ۰۲۱-۸۸۶۲۰۸۵
FarmaSOS.com

D250300AHM

Defogging logic

To reduce the probability of fogging up inside of the windshield, the air intake or air conditioning are controlled automatically according to certain conditions such as or position. To cancel or return to the defogging logic, do the following.

D250301AUN

Manual climate control system

1. Turn the ignition switch to the ON position.
2. Turn the mode selection knob to the defrost position ( ).
3. Push the air intake control button at least 5 times within 3 seconds.

The indicator light in the air intake control button will blink 3 times with 0.5 second of interval. It indicates that the defogging logic is canceled or returned to the programmed status.

If the battery has been discharged or disconnected, it resets to the defog logic status.

تلفن شبانه روزی: ۰۹۰۸۸۸۶۲۰۸۵
FarmaSOS.com

D250302AHM-EE

Automatic climate control system

1. Turn the ignition switch to the ON position.
2. Select the defroster position pressing the defroster button ( ).
3. While pressing the air conditioning button (A/C), press the air intake control button ( ) at least 5 times within 3 seconds.

The A/C display blinks 3 times with 0.5 second of interval. It indicates that the defogging logic is canceled or returned to the programmed status.

If the battery has been discharged or disconnected, it resets to the defog logic status.

STORAGE COMPARTMENT

D270000AHM

These compartments can be used to store small items.

⚠ CAUTION

- *To avoid possible theft, do not leave valuables in the storage compartment.*
- *Always keep the storage compartment covers closed while driving. Do not attempt to place so many items in the storage compartment that the storage compartment cover can not close securely.*

⚠ WARNING - Flammable materials

Do not store cigarette lighters, propane cylinders, or other flammable/explosive materials in the vehicle. These items may catch fire and/or explode if the vehicle is exposed to hot temperatures for extended periods.

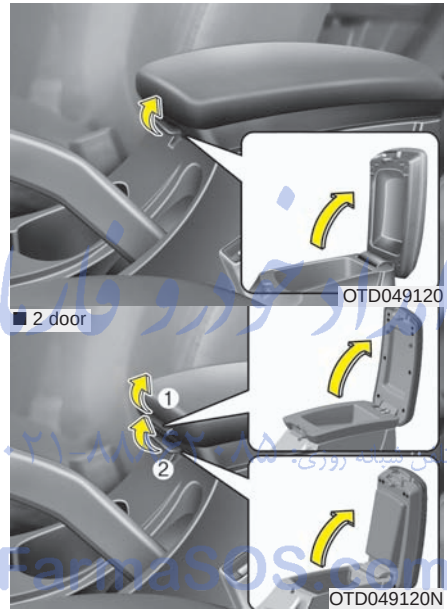

D270100ATD

Center console storage (if equipped)

To open the center console storage, pull up the lever.

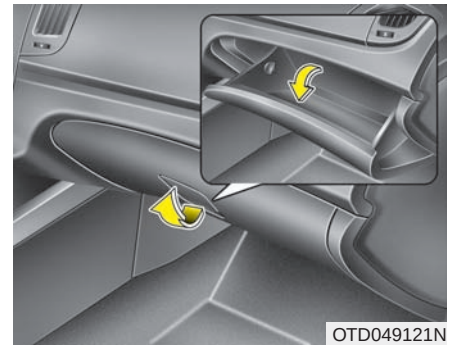

D270200AUN

Glove box

To open the glove box, pull the handle and the glove box will automatically open. Close the glove box after use.

⚠ WARNING

To reduce the risk of injury in an accident or sudden stop, always keep the glove box door closed while driving.

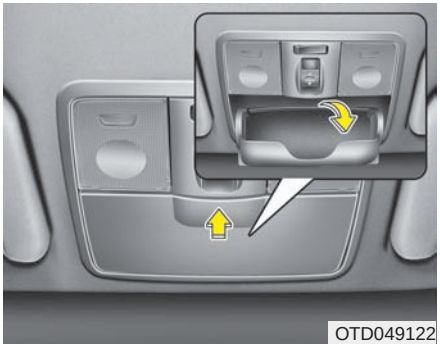

D270300ATD

Sunglass holder

To open the sunglass holder, press the cover and the holder will slowly open. Place your sunglasses with the lenses facing out.

To close the sunglass holder, push it up.

⚠ WARNING

- **Do not keep objects except sunglasses inside the sunglass holder. Such objects can be thrown from the holder in the event of a sudden stop or an accident, possibly injuring the passengers in the vehicle.**
- **Do not open the sunglass holder while the vehicle is moving. The rear view mirror of the vehicle can be blocked by an open sunglass holder.**

تلفن شبانه روزی: ۰۲۱-۸۸۸۶۲۰۸۵
FarmaSOS.com

INTERIOR FEATURES

D280300ATD

Cup holder

⚠ WARNING - Hot liquids

- **Do not place uncovered cups of hot liquid in the cup holder while the vehicle is in motion. If the hot liquid spills, you may burn yourself. Such a burn to the driver could lead to loss of control of the vehicle.**
- **To reduce the risk of personal injury in the event of a sudden stop or collision, do not place uncovered or unsecured bottles, glasses, cans, etc., in the cup holder while the vehicle is in motion.**

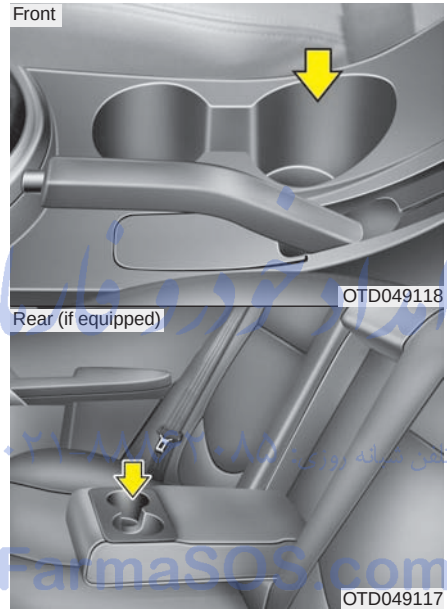

D280301AFD

Cups or small beverage cans may be placed in the cup holders.

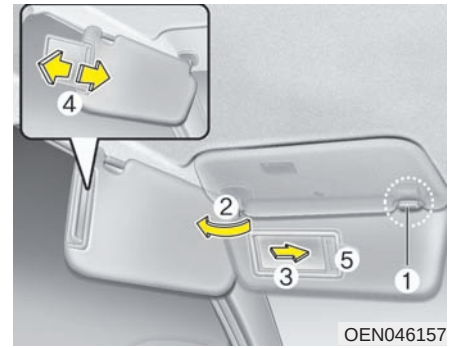

D280400ATD-EU

Sunvisor

Use the sunvisor to shield direct light through the front or side windows.

To use the sunvisor, pull it downward.

To use the sunvisor for the side window, pull it downward, unsnap it from the bracket (1) and swing it to the side (2).

To use the vanity mirror, pull down the visor and slide the mirror cover (3, if equipped).

Adjust the sunvisor extension forward or backward (4).

The ticket holder (5, if equipped) is provided for holding a tollgate ticket.

FarmaSOS.com

⚠ CAUTION - Vanity mirror lamp

Close the vanity mirror cover securely and return the sunvisor to its original position after use. If the vanity mirror is not closed securely, the lamp will stay on and could result in battery discharge and possible sunvisor damage.

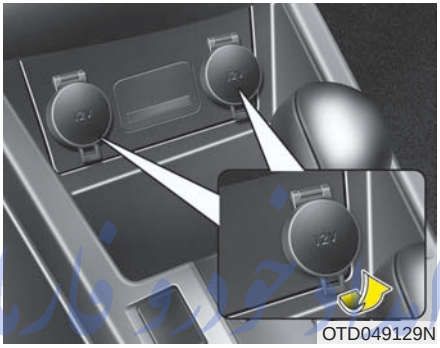

D280500AEN

Power outlet (if equipped)

The power outlet is designed to provide power for mobile telephones or other devices designed to operate with vehicle electrical systems. The devices should draw less than 10 amps with the engine running.

FarmaSOS.com

⚠ CAUTION

- ***Use the power outlet only when the engine is running and remove the accessory plug after use. Using the accessory plug for prolonged periods of time with the engine off could cause the battery to discharge.***
- ***Only use 12V electric accessories which are less than 10A in electric capacity.***
- ***Adjust the air-conditioner or heater to the lowest operating level when using the power outlet.***
- ***Close the cover when not in use.***
- ***Some electronic devices can cause electronic interference when plugged into a vehicle's power outlet. These devices may cause excessive audio static and malfunctions in other electronic systems or devices used in your vehicle.***

⚠ WARNING

Do not put a finger or a foreign element (pin, etc.) into a power outlet and do not touch with a wet hand. You may get an electric shock.

OTD041124N

D280600AEN

Digital clock

⚠ WARNING

Do not adjust the clock while driving. You may lose your steering control and cause severe personal injury or accidents.

Whenever the battery terminals or related fuses are disconnected, you must reset the time.

When the ignition switch is in the ACC or ON position, the clock buttons operate as follows:

D280601ATD

- ***HOUR (1) :***

  Pressing the H button will advance the time display by one hour.

D280602ATD

- ***MINUTE (2) :***

  Pressing the M button will advance the time display by one minute.

D280604ATD

- ***Display conversion:***

  To change the 12 hour format to the 24 hour format, press the H and M button at the same time for more than 4 seconds.

  For example, if the time is 10:15 p.m., the display will change to 22:15.

■ Type A

OTD041230L

■ Type B

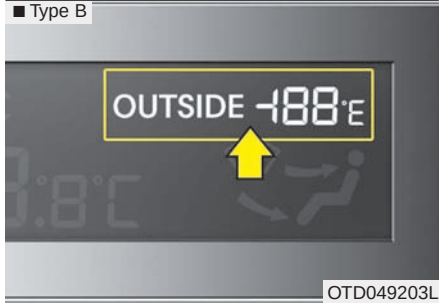

OTD049203L

Outside thermometer

The current outside temperature is displayed in 1°F (1°C) increments. The temperature range is between -40°F ~ 140°F (-40°C ~ 60°C).

- The outside temperature on the display may not change immediately prevent the driver from being distracted.

امداد خودرو فارما
تلفن شبانه روزی: ۰۲۱-۸۸۸۷۱۰۸۵
FarmaSOS.com

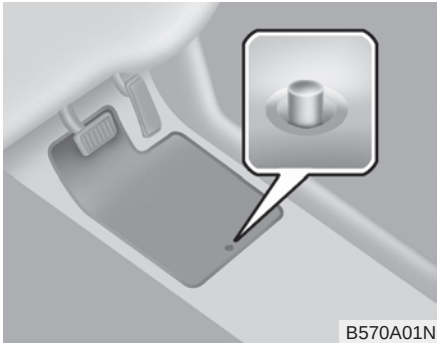
B570A01N

Floor mat anchor(s) (if equipped)

When using a floor mat on the front floor carpet, make sure it attaches to the floor mat anchor(s) in your vehicle. This keeps the floor mat from sliding forward.

⚠ WARNING

The following must be observed when installing ANY floor mat to the vehicle.

- **Ensure that the floor mats are securely attached to the vehicle's floor mat anchor(s) before driving the vehicle.**
- **Do not use ANY floor mat that cannot be firmly attached to the vehicle's floor mat anchors.**
- **Do not stack floor mats on top of one another (e.g. all-weather rubber mat on top of a carpeted floor mat). Only a single floor mat should be installed in each position.**

IMPORTANT - Your vehicle was manufactured with driver's side floor mat anchors that are designed to securely hold the floor mat in place. To avoid any interference with pedal operation, KIA recommends that only the KIA floor mat designed for use in your vehicle be installed.

OTD041231N

Navigation system (if equipped)

The navigation system ascertains the present position of your vehicle by using information from satellites and guides you to the place you assign as the destination.

Detailed information for the navigation system is described in a separately supplied manual.

AUDIO SYSTEM

✻ NOTICE

If you install an aftermarket HID head lamp, your vehicle's audio and electronic device may malfunction.

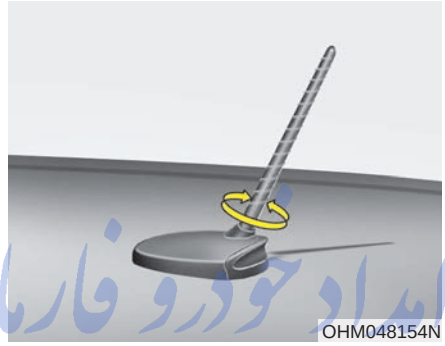

D300101ATD

Antenna

Your vehicle uses a roof antenna to receive both AM and FM broadcast signals. This antenna can be removed. To remove the antenna, turn it counterclockwise. To install the antenna, turn it clockwise.

FarmaSOS.com

⚠ CAUTION

- ***Before entering a place with a low height clearance or a car wash, remove the antenna by rotating it counter-clockwise. If not, the antenna may be damaged.***
- ***When reinstalling your antenna, it is important that it is fully tightened and adjusted to the upright position to ensure proper reception. But it could be removed when parking the vehicle.***

OTD049100

D300200AEN

Steering wheel audio control (if equipped)

The steering wheel audio control button is installed to promote safe driving.

> ⚠ **CAUTION**
>
> ***Do not operate the audio remote control buttons simultaneously.***

D300204ATD

VOLUME (🔈 + / 🔈 –)

- Push the lever up to increase volume.
- Push the lever down to decrease volume.

D300205AEN

MUTE

- Press the MUTE button to cancel the sound.
- Press the MUTE button again to activate the sound.

D300202AEN

MODE

Press the button to select Radio or CD (compact disc).

D300203AHM

SEEK/PRESET (∧ / ∨)

The SEEK/PRESET button has different functions base on the system mode. For the following functions the button should be pressed for 0.8 second or more.

RADIO mode

It will function as the AUTO SEEK select button.

CDP mode

It will function as the FF/REW button.

CDC mode

It will function as the DISC UP/DOWN button.

If the SEEK button is pressed for less than 0.8 second, it will work as follows in each mode.

RADIO mode

It will function as the PRESET STATION select buttons.

CDP mode

It will function as the TRACK UP/DOWN button.

CDC mode

It will function as the TRACK UP/DOWN button.

Detailed information for audio control buttons is described in the following pages in this section.

D281900ATD

Bluetooth hands-free (if equipped)

You can use the phone wirelessly by using the Bluetooth.

Detailed information for the Bluetooth hands-free is described in the Audio system section.

امداد خودرو فارما
تلفن شبکه روزی: ۰۲۱-۲۶۴۸۸۸۱۰
FarmaSOS.com

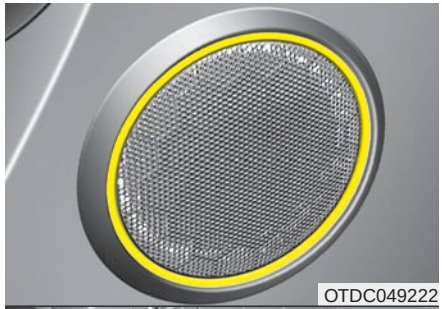
OTDC049222

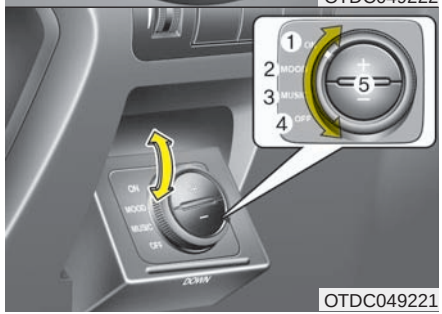

OTDC049221

D210300ATD

Advanced lighting speaker (if equipped)

Pull down the switch.

The advanced lighting speaker that lights around the front speaker is adjusted by turning the knob as follows.

1. ON : The light turns on.
2. MOOD : The light shade changes automatically at regular interval.
3. MUSIC : The light blinks or changes shade according to the sound of the audio.
   If the audio is not turned on, the light does not turn on.
4. OFF : The light turns off.
5. +/- : When the lights are on, push the illumination button to adjust the light intensity.
   If the low lighting grade is selected, the intensity of the light may be weak or may not illuminate according to the audio volume or selected conditions.

✻ NOTICE

The lighting around the front speaker may not illuminate when the sound of the audio is low.

⚠ CAUTION

Do not use the lights for extended periods when engine is not running.

It may cause battery discharge.

⚠ WARNING

Make sure the switch locks in position to avoid damage of the switch and injury of your hands or body parts.

FarmaSOS.com

OTD049130N

D281400AFD

Aux, USB and iPod®* (if equipped)

If your vehicle has an aux and/or USB (universal serial bus) port or iPod port, you can use an aux port to connect audio devices and an USB port to plug in an USB and also an iPod port to plug in an iPod.

✻ NOTICE

When using a portable audio device connected to the power outlet, noise may occur during playback. If this happens, use the power source of the portable audio device.

* iPod® is a trademark of Apple Inc.

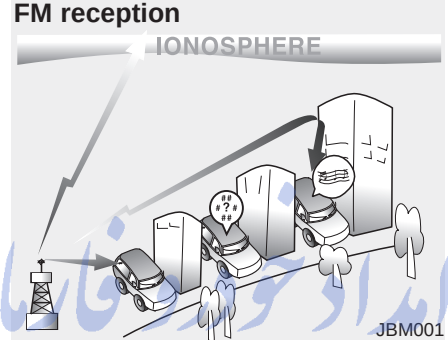

JBM001

D300800ATD

How car audio works

AM and FM radio signals are broadcast from transmitter towers located around your city. They are intercepted by the radio antenna on your car. This signal is then received by the radio and sent to your car speakers.

When a strong radio signal has reached your vehicle, the precise engineering of your audio system ensures the best possible quality reproduction. However, in some cases the signal coming to your vehicle may not be strong and clear. This can be due to factors such as the distance from the radio station, closeness of other strong radio stations or the presence of buildings, bridges or other large obstructions in the area.

ParmaSOS.com

AM reception

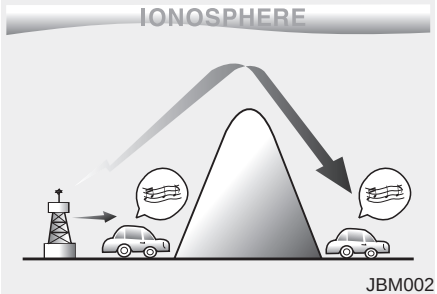

AM broadcasts can be received at greater distances than FM broadcasts. This is because AM radio waves are transmitted at low frequencies. These long, low frequency radio waves can follow the curvature of the earth rather than travelling straight out into the atmosphere. In addition, they curve around obstructions so that they can provide better signal coverage.

FM radio station

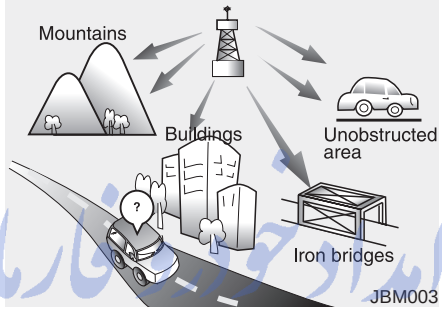

FM broadcasts are transmitted at high frequencies and do not bend to follow the earth's surface. Because of this, FM broadcasts generally begin to fade at short distances from the station. Also, FM signals are easily affected by buildings, mountains, or other obstructions. These can result in certain listening conditions which might lead you to believe a problem exists with your radio. The following conditions are normal and do not indicate radio trouble:

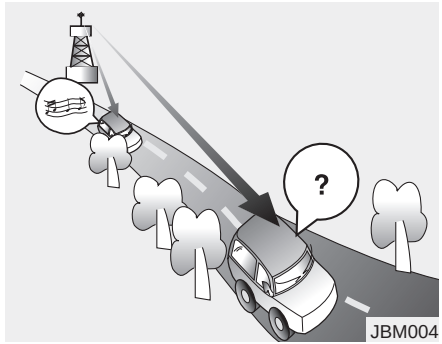

- Fading - As your car moves away from the radio station, the signal will weaken and sound will begin to fade. When this occurs, we suggest that you select another stronger station.
- Flutter/Static - Weak FM signals or large obstructions between the transmitter and your radio can disturb the signal causing static or fluttering noises to occur. Reducing the treble level may lessen this effect until the disturbance clears.

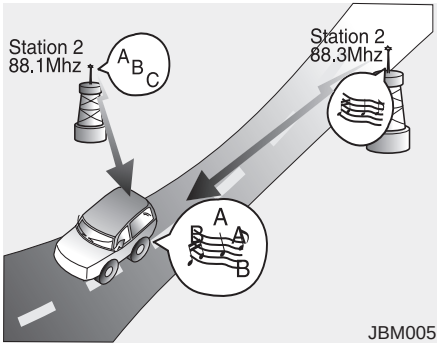

- Station Swapping - As a FM signal weakens, another more powerful signal near the same frequency may begin to play. This is because your radio is designed to lock onto the clearest signal. If this occurs, select another station with a stronger signal.
- Multi-Path Cancellation - Radio signals being received from several directions can cause distortion or fluttering. This can be caused by a direct and reflected signal from the same station, or by signals from two stations with close frequencies. If this occurs, select another station until the condition has passed.

Satellite radio reception

You may experience problems in receiving SIRIUS satellite radio signals in the following situations.

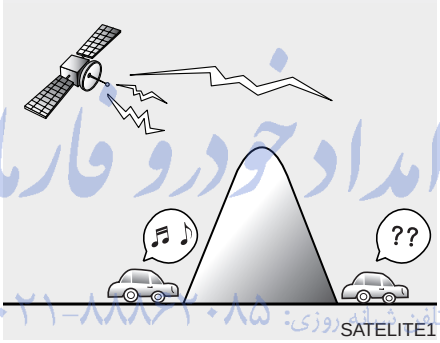

- If you are driving in a tunnel or a covered parking area.
- If you are driving beneath the top level of a multi-level freeway.
- If you drive under a bridge.
- If you are driving next to a tall vechicle(such as a truck or a bus) that block the signal.
- If you are driving in a valley where the surrounding hills or peaks block the signal from the satellite.
- If you are driving on a mountain road where is blocked by mountains.

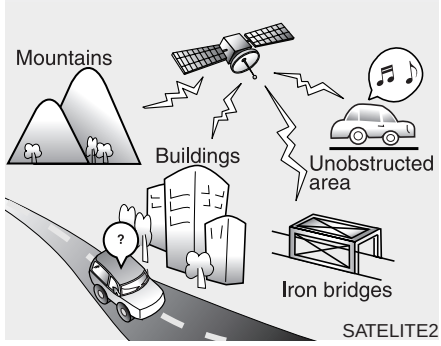

- If you are driving in an area with tall trees that block the signal(10m or more), for example on an road that goes through a dense forset.
- The signal can become weak in some areas that are not covered by the repeater station network.

Please note that these may be other unforeseen circumstances when there are problems with the reception of SIRIUS satellite radio signal.

امداد خودرو فارما
تلفن پاسخگویی روزی: ۰۲۱-۸۸۸۲۰۰۸۵
FormaSOS.com

Using a cellular phone or a two-way radio

When a cellular phone is used inside the vehicle, noise may be produced from the audio equipment. This does not mean that something is wrong with the audio equipment. In such a case, use the cellular phone at a place as far as possible from the audio equipment.

⚠ CAUTION

When using a communication system such a cellular phone or a radio set inside the vehicle, a separate external antenna must be fitted. When a cellular phone or a radio set is used with an internal antenna alone, it may interfere with the vehicle's electrical system and adversely affect safe operation of the vehicle.

⚠ WARNING

Don't use a cellular phone when you are driving. You must stop at a safe place to use a cellular phone.

Care of disc (if equipped)

- If the temperature inside the car is too high, open the car windows for ventilation before using your car audio.
- It is illegal to copy and use MP3/WMA/AAC/WAVE files without permission. Use CDs that are created only by lawful means.
- Do not apply volatile agents such as benzene and thinner, normal cleaners and magnetic sprays made for analogue disc onto CDs.
- To prevent the disc surface from getting damaged. Hold and carry CDs by the edges or the edges of the center hole only.
- Clean the disc surface with a piece of soft cloth before playback (wipe it from the center to the outside edge).
- Do not damage the disc surface or attach pieces of sticky tape or paper onto it.
- Make sure on undesirable matter other than CDs are inserted into the CD player (Do not insert more than one CD at a time).
- Keep CDs in their cases after use to protect them from scratches or dirt.
- Depending on the type of CD-R/CD-RW CDs, certain CDs may not operate normally according to manufacturing companies or making and recording methods. In such circumstances, if you still continue to use those CDs, they may cause the malfunction of your car audio system.

✻ NOTICE - Playing an Incompatible Copy-Protected Audio CD

Some copy protected CDs, which do not comply with the international audio CD standards (Red Book), may not play on your car audio. Please note that if you try to play copy protected CDs and the CD player does not perform correctly the CDs maybe defective, not the CD player.

امداد خودرو فارما
تلفن شبانه روزی: ۰۲۱-۸۸۸۶۲۰۸۵
FarmaSOS.com

RADIO, SET UP, VOLUME, AUDIO CONTROL (PA710TD, USA)

❊ There will be no Bluetooth® logo if the Bluetooth feature is not supported.

1. FM/AM Selection Button
2. Automatic Channel Selection Button
3. Power ON/OFF Button & Volume Control Knob
4. SCAN Button
5. SETUP Button
6. Manual Channel Selection Knob & SETUP Button
7. Preset Button

FarmaSOS.com

RADIO, SET UP, VOLUME, AUDIO CONTROL (PA760TD, USA)

❊ There will be no Bluetooth® logo if the Bluetooth feature is not supported.

1. FM/AM Selection Button
2. Automatic Channel Selection Button
3. Power ON/OFF Button & Volume Control Knob
4. SCAN Button
5. SETUP Button
6. Manual Channel Selection Knob & SETUP Button
7. Preset Button

FarmaSOS.com

1. FM/AM Selection Button

Turns to FM or AM mode, and toggles FM1 ➟ FM2 ➟ AM ➟ FM1 ➟... when the button is pressed each time.

2. Automatic Channel Selection Button

- When the [SEEK ∨] button is pressed, it reduces the band frequency by 200 kHz to automatically select a channel. Stops at the previous frequency if no channel is found.
- When the [SEEK ∧] button is pressed, it increases the band frequency by 200 kHz to automatically select a channel. Stops at the previous frequency if no channel is found.

3. Power ON/OFF Button & Volume Control Knob

Turns on/off the set when the IGNITION SWITCH is on ACC or ON. If the button is turned to the right, it increases the volume and left, decreases the volume.

4. SCAN Button

When the button is pressed, the frequencies will become increased and receive the corresponding broadcasts. This function will play the frequencies for 5 seconds each and find other broadcasts as the frequency increases. Press the button again when desiring to continue listening to the currently playing broadcast.

5. SETUP Button

Press this button to turn to the TEXT SCROLL, SDVC and P.BASS adjustment mode. If no action is taken for 5 seconds after pressing the button, it will return to the play mode. (After entering SETUP mode, move between items using the left, right and PUSH functions of the [TUNE] button.)

The setup items changes from TEXT SCROLL ↔ SDVC ↔ P.BASS ↔ SIRIUS ↔ PHONE...

• SCROLL

This function is used to display characters longer than the LCD text display and can be turned ON/OFF through the volume controller.

• SDVC

This function automatically adjusts the volume level according to the speed of the vehicle and can be turned ON/OFF through the volume controller.

• POWER BASS (P.BASS)

This function creates virtual sound effects and allows adjustments to the BASS level.

HIGH ➟ MID ➟ LOW ➟ OFF

6. Manual Channel Selection Knob & SETUP Button

Rotate the knob clockwise by one notch to increase frequency by 50 kHz from current frequency.

Rotate the knob counterclockwise by one notch to decrease frequency by 50 kHz from current frequency.

Pressing the button changes the BASS, MIDDLE, TREBLE, FADER and BALANCE TUNE mode. The mode selected is shown on the display. After selecting each mode, rotate the Audio control knob clockwise or counterclockwise.

FarmaSOS.com

• BASS Control

To increase the BASS, rotate the knob clockwise, while to decrease the BASS, rotate the knob counterclockwise.

• MIDDLE Control

To increase the MIDDLE, rotate the knob clockwise, while to decrease the MIDDLE, rotate the knob counterclockwise.

• TREBLE Control

To increase the TREBLE, rotate the knob clockwise, while to decrease the TREBLE, rotate the knob counterclockwise.

• FADER Control

Turn the control knob clockwise to emphasize rear speaker sound (front speaker sound will be attenuated). When the control knob is turned counterclockwise, front speaker sound will be emphasized (rear speaker sound will be attenuated).

• BALANCE Control

Rotate the knob clockwise to emphasize right speaker sound (left speaker sound will be attenuated). When the control knob is turned counter clockwise, left speaker sound will be emphasized (right speaker sound will be attenuated).

7. Preset Button

Press [1]~[6] buttons less than 0.8 second to play the channel saved in each button.

Press [1]~[6] button more than 0.8 second or longer to save current station to the respective button with a beep.

تلفن شبانه روزی: ۰۲۱-۸۸۸۶۲۰۸۵

FarmaSOS.com

CD (PA710TD, USA)

❊ There will be no Bluetooth® logo if the Bluetooth feature is not supported.

1. CD Loading Slot
2. CD Eject Button
3. CD Selection Button
4. Automatic Track Selection Button
5. RANDOM Play Button
6. REPEAT Button
7. CD Indicator
8. SCAN Play Button
9. INFO Button
10. FOLDER Moving Button
11. SEARCH Knob & ENTER Button

FarmaSOS.com

CD (PA760TD, USA)

❊ There will be no Bluetooth® logo if the Bluetooth feature is not supported.

1. CD Loading Slot
2. CD Eject Button
3. CD Selection Button
4. Automatic Track Selection Button
5. RANDOM Play Button
6. REPEAT Button
8. SCAN Play Button
9. INFO Button
10. FOLDER Moving Button
11. SEARCH Knob & ENTER Button
12. DISC Selection Button
13. CD LOAD Button

FarmaSOS.com

1. CD Loading Slot

Please face printed side upward and gently press in. When the ignition switch is on ACC or ON and power is off, power is automatically turned on if the CD is loaded. This CDP supports only 12 cm CD. If VCD or Data CD are loaded, "Reading Error" message will appear and the CD will be ejected.

2. CD Eject Button

Press [⏏] button to eject the CD during CD playback. This button is enabled when ignition switch is off.

3. CD Selection Button

If there is a CD in the CD DECK it turns to CD mode then it toggles.

If there is no CD, then it displays the message "No Media" and returns to the previous mode.

4. Automatic Track Selection Button

- Press [TRACK ∨] button for less than 0.8 second to play from the beginning of current song.
- Press [TRACK ∨] button for less than 0.8 second and press again within 1 second to play the previous song.
- Press [TRACK ∨] button for 0.8 or longer to initiate reverse direction high speed sound search of current song.
- Press [TRACK ∧] button for less than 0.8 second to play the next song.
- Press [TRACK ∧] button for 0.8 or longer to initiate high speed sound search of current song.

تلفن شبانه روزی: ۰۹۱۲۸۸۵۲۱۰۸۵
FarnasSOS.com

5. RANDOM Play Button

Turns on/off the randomization of the play list of files in the currently played DISC. To cancel the mode, press the button once again.

6. REPEAT Button

Repeats current song when the button is pressed for less than 0.8 second.

Repeats the entire DISC when the button is pressed for 0.8 second or longer.

7. CD Indicator (PA710)

When car ignition switch is ACC or ON and if the CD is loaded, this indicator is lighted. If the CD is ejected the light is turned off.

8. SCAN Play Button

Scans each song in the CD for 10 seconds each. To cancel the mode, press the button once again.

9. INFO Button

Displays the information of the current CD TRACK in the order of DISC TITLE ➞ DISC ARTIST ➞ TRACK TITLE ➞ TRACK ARTIST ➞ TOTAL TRACK ➞ PLAY SCREEN ➞ DISC TITLE ➞... (not displayed if the information is not available on the DISC.)

10. FOLDER Moving Button

- Press [FOLDER ∨] button to move to child folder of the current folder and display the first song in the folder.

  Press TUNE/ENTER knob to move to the folder displayed. It will play the first song in the folder.

- Press [FOLDER ∧] button to move to parent folder of the current folder and display the first song in the folder.

  Press TUNE/ENTER knob to move to the folder displayed.

11. SEARCH Knob & ENTER Button

Turn this button clockwise to display songs after current song.

Also, turn this button counterclockwise to display songs before current song.

To listen to the displayed song, press the button to skip to the song and play.

Pressing the button changes the BASS, MIDDLE, TREBLE, FADER and BALANCE TUNE mode. The mode selected is shown on the display. After selecting each mode, rotate the Audio control knob clockwise or counterclockwise.

• BASS Control

To increase the BASS, rotate the knob clockwise, while to decrease the BASS, rotate the knob counterclockwise.

• MIDDLE Control

To increase the MIDDLE, rotate the knob clockwise, while to decrease the MIDDLE, rotate the knob counterclockwise.

• TREBLE Control

To increase the TREBLE, rotate the knob clockwise, while to decrease the TREBLE, rotate the knob counterclockwise.

• FADER Control

Turn the control knob clockwise to emphasize rear speaker sound (front speaker sound will be attenuated). When the control knob is turned counterclockwise, front speaker sound will be emphasized (rear speaker sound will be attenuated).

• BALANCE Control

Rotate the knob clockwise to emphasize right speaker sound (left speaker sound will be attenuated). When the control knob is turned counter clockwise, left speaker sound will be emphasized (right speaker sound will be attenuated).

12. DISC Selection Button (PA760)

- Press [DISC ∨] button to change disc to the previous disc.
- Press [DISC ∧] button to change disc to the next disc.

13. CD LOAD Button (PA760)

Press [LOAD] button to load CDs into available CDC slots (from 1~6).

Press [LOAD] button for 2 seconds or longer to load into all available decks. The last CD will play. Idle status for 10 seconds will terminate the loading process.

امداد خودرو فارما
تلفن شبانه‌روزی: ۰۲۱-۸۸۸۶۱۰۸۵
FarmaSOS.com

AUX/USB (PA710TD, USA)

❊ There will be no Bluetooth® logo if the Bluetooth feature is not supported.

1. AUX/USB Selection Button
2. TRACK Moving Button
3. RANDOM Playback Button
4. REPEAT Selection Button
5. SCAN Selection Button
6. INFO Button
7. FOLDER Moving Button
8. SEARCH Knob & ENTER Button

FarmaSOS.com

AUX/USB (PA760TD, USA)

❊ There will be no Bluetooth® logo if the Bluetooth feature is not supported.

1. AUX/USB Selection Button
2. TRACK Moving Button
3. RANDOM Playback Button
4. REPEAT Selection Button
5. SCAN Selection Button
6. INFO Button
7. FOLDER Moving Button
8. SEARCH Knob & ENTER Button

FarmaSOS.com

1. AUX/USB Selection Button

If the auxiliary device is connected, it turns to AUX or USB mode to play the sound from the auxiliary player. If there is no auxiliary device, then it displays the message "No Media" for 3 seconds and returns to the previous mode.

2. TRACK Moving Button

- Press the [TRACK ∨] button for less than 0.8 second to play from the beginning of the song currently played.

  Press the button for less than 0.8 second and press it again within 1 second to move to and play the previous track.

  Press the button for 0.8 second or longer to play the song in reverse direction in fast speed.
- Press the [TRACK ∧] button for less than 0.8 second to move to the next track. Press the button for 0.8 second or longer to play the song in forward direction in fast speed.

3. RANDOM Playback Button

Press the button for less than 0.8 second to start or stop the random playback of the songs in the current folder.

Press the button for more than 0.8 second to randomly play the entire songs in the USB device.

Press the button again to cancel the mode.

4. REPEAT Button

Press the button for less than 0.8 second to repeat the song currently played.

Press the button for more than 0.8 second to repeat the entire songs in the USB device.

تلفن شبانه روزی: ۰۲۱-۸۸۸۶۲۰۸۵

5. SCAN Selection Button

Scans each song in the USB device for 10 seconds each.

Press the button once again to cancel scanning.

FarnaSOS.com

6. INFO Button

Displays the information of the file currently played in the order of FILE NAME ➞ TITLE ➞ ARTIST ➞ ALBUM ➞ FOLDER ➞ TOTAL FILE ➞ NORMAL DISPLAY ➞ FILE NAME ➞… (Displays no information if the file has no song information.)

7. FOLDER Moving Button

- Press [FOLDER ∨] button to move to child folder of the current folder and display the first song in the folder.

  Press TUNE/ ENTER knob to move to the folder displayed. It will play the first song in the folder.
- Press [FOLDER ∧] button to move to parent folder display the first song in the folder.

  Press TUNE/ENTER knob to move to the folder displayed.

8. SEARCH Knob & ENTER Button

Turn this button clockwise to display the songs ahead of the currently played song. Turn the button counterclockwise to display the songs before the currently played song.

- Press the button to skip to and play the selected song.
- Pressing the button changes the BASS, MIDDLE, TREBLE, FADER and BALANCE TUNE mode. The mode selected is shown on the display. After selecting each mode, rotate the Audio control knob clockwise or counterclockwise.

⚠ CAUTION IN USING USB DEVICE

- *To use an external USB device, make sure the device is not connected when starting up the vehicle and connect the device after starting up.*
- *If you start the vehicle when the USB device is connected, it may damage the USB device. (USB is not ESA)*
- *If the vehicle is started up or turned off while the external USB device is connected, the external USB device may not work.*
- *It may not play inauthentic MP3 or WMA files.*
  1) It can only play MP3 files with the compression rate between 8Kbps~320Kbps.
  2) It can only play WMA music files with the compression rate between 8Kbps~320Kbps.
- *Take cautions for static electricity when connecting or disconnecting the external USB device.*
- *An encoded MP3 player is not recognizable.*

(Continued)

(Continued)

- *Depending on the condition of the external USB device, the connected external USB device can be unrecognizable.*
- *When the formatted byte/sector setting of External USB devices is not either 512BYTE or 2048BYTE, then the device will not be recognized.*
- *Use only a USB device formatted to FAT 12/16/32.*
- *USB devices without USB I/F authentication may not be recognizable.*
- *Make sure the USB connection terminal does not come in contact with a human body or any object.*
- *If you repeat connecting or disconnecting USB device in a short period of time, it may break the device.*
- *You might hear a strange noise when connecting or disconnecting a USB device.*

(Continued)

(Continued)

- *If you disconnect the external USB device during playback in USB mode, the external USB device can be damaged or malfunction. Therefore, connect the external USB device when the engine is turned off or in another mode.*
- *Depending on the type and capacity of the external USB device or the type of the files stored in the device, there is a difference in the time taken for recognition of the device, but this is not an indicator of trouble and you only have to wait.*
- *Do not use the USB device for other purposes than playing music files.*
- *Use of USB accessories such as recharger or heater using USB I/F may lower performance or cause trouble.*
- *If you use devices such as a USB hub you purchased separately, the vehicle's audio system may not recognize the USB device. Connect the USB device directly to the multimedia terminal of the vehicle.*

(Continued)

FarnaCos.com

(Continued)

- *If USB device is divided by logical drives, only the music files on the highest-priority drive are recognized by the car audio.*
- *Devices, such as MP3 players, cellular phones, or digital cameras not recognized by standard USB I/F may not be recognized.*
- *USB devices other than standardized goods (METAL COVER TYPE USB) can be unrecognizable.*
- *USB flash memory reader (such as CF, SD, microSD, etc.) or external-HDD type devices may be unrecognized.*
- *Music files protected by DRM (DIGITAL RIGHTS MANAGEMENT) are not recognizable.*
- *The data in the USB memory may be lost while using this AUDIO. It is recommeded to back up important data on a personal storage device.*

(Continued)

(Continued)

- *Please avoid using USB memory products which can be used as key chains or cellular phone accessories as they could cause damage to the USB jack. Please make certain only to use plug type connector products as shown below.*

ایران خودرو فارما
تلفن شبانه روزی: ۰۲۱-۸۸۸۶۲۰۸۵
FarmaSOS.com

RUNNING iPod® (PA710TD, USA)

❊ There will be no Bluetooth® logo if the Bluetooth feature is not supported.

1. iPod Selection Button
2. TRACK Moving Button
3. RANDOM Playback Button
4. REPEAT Selection Button
5. INFO Button
6. SEARCH Knob & ENTER Button
7. CATEGORY Selection Button

FarmaSOS.com

iPod® is a trademark of Apple Inc.

RUNNING iPod® (PA760TD, USA)

❊ There will be no Bluetooth® logo if the Bluetooth feature is not supported.

1. iPod Selection Button
2. TRACK Moving Button
3. RANDOM Playback Button
4. REPEAT Selection Button
5. INFO Button
6. SEARCH Knob & ENTER Button
7. CATEGORY Selection Button

FarmaSOS.com

iPod® is a trademark of Apple Inc.

1. iPod Selection Button

If iPod is connected, it switches to the iPod mode from the previous mode to play the song files stored in the iPod.

If there is no iPod connected, then it displays the message "No Media" for 3 seconds and returns to the previous mode.

2. TRACK Moving Button

- Press the [TRACK ∧] button for less than 0.8 second to play from the beginning of the song currently played.

  Press the button for less than 0.8 second and press it again within 1 second to move to and play the previous track.

  Press the button for 0.8 second or longer to play the song in reverse direction in fast speed.
- Press the [TRACK ∨] button for less than 0.8 second to move to the next track.

  Press the button for 0.8 second or longer to play the song in forward direction in fast speed.

3. REPEAT Button

Repeats the song currently played.

4. RANDOM Playback Button

Press the button for less than 0.8 second to start or stop the random playback of the songs within the current category.

Press the button for longer than 0.8 second to randomly play all songs in the entire album of the iPod.

Press the button once again to cancel the mode.

5. INFO Button

Displays the information of the file currently played in the order of TITLE ➡ ARTIST ➡ ALBUM ➡ NORMAL DISPLAY ➡ TITLE ➡... (Displays no information if the file has no song information.)

FarmaSOS.com

6. SEARCH Knob & ENTER Button

When you turn the button clockwise, it will display the songs (category) ahead of the song currently played (category in the same level).

Also, when you turn the button counterclockwise, it will display the songs (category) before the song currently played (category in the same level).

To listen to the song displayed in the song category, press the button to skip to and play the selected song.

Pressing the button changes the BASS, MIDDLE, TREBLE, FADER and BALANCE TUNE mode. The mode selected is shown on the display. After selecting each mode, rotate the Audio control knob clockwise or counterclockwise.

7. CATEGORY Selection Button

Moves to the upper category from currently played category of the iPod.

To move to (play) the category (song) displayed, press TUNE/ENTER knob.

You will be able to search through the lower category of the selected category.

The order of iPod's category is SONG, ALBUMS, ARTISTS, GENRES, and iPod.

✻ NOTICE FOR USING THE iPod® DEVICE

- Some iPod models might not support the communication protocol and the files will not be played.
  Supported iPod models:
  - iPod Mini
  - iPod 4th(Photo) ~ 6th(Classic) generation
  - iPod Nano 1st~4th generation
  - iPod Touch 1st~2nd generation
- The order of search or playback of songs in the iPod can be different from the order searched in the audio system.
- If the iPod disabled due to its own malfunction, reset the iPod. (Reset: Refer to iPod manual)
- An iPod may not operate normally on low battery.
- Some iPod devices, such as the iPhone, can be connected through the Bluetooth® interface. The device must have audio Bluetooth® capability (such as for stereo headphone Bluetooth®). The device can play, but it will not be controlled by the audio system.

⚠ CAUTION IN USING iPod® DEVICE

- *You need the power cable exclusive for an iPod in order to operate an iPod with the buttons on the audio system. The PC cable provided by Apple may cause a malfunction and do not use it for vehicle use.*
- *When connecting the device with an iPod cable, push in the jack fully not to interfere with communication.*
- *When adjusting the sound effects of an iPod and the audio system, the sound effects of both devices will overlap and might reduce or distort the quality of the sound.*
- *Deactivate (turn off) the equalizer function of an iPod when adjusting the audio system's volume, and turn off the equalizer of the audio system when using the equalizer of an iPod.*

(Continued)

(Continued)

- *When the iPod cable is connected, the system can be switched to the AUX mode even without the iPod device and can cause noise. Disconnect the iPod cable when you are not using the iPod device.*
- *When the iPod is not used for the audio system, the iPod cable has to be separate from iPod devices. Original display of iPod may not be displayed.*

FarmaBOS.com

SIRIUS SATELLITE RADIO (PA710TD, USA)

❊ There will be no Bluetooth® logo if the Bluetooth feature is not supported.

1. SATELLITE RADIO Selection Button
2. Channel Selection Button
3. SCAN Button
4. INFO Button
5. CAT/FOLDER Button
6. TUNE Knob and ENTER Button
7. Preset Selection Button

FarmaSOS.com

SIRIUS SATELLITE RADIO (PA760TD, USA)

❊ There will be no Bluetooth® logo if the Bluetooth feature is not supported.

1. SATELLITE RADIO Selection Button
2. Channel Selection Button
3. SCAN Button
4. INFO Button
5. CAT/FOLDER Button
6. TUNE Knob and ENTER Button
7. Preset Selection Button

FarmaSOS.com

How to Use SIRIUS Satellite Radio

Your Kia vehicle is equipped with 3 months complimentary period of SIRIUS Satellite Radio so you have access to over 130 channels of music, information, and entertainment programming.

Activation

In order to extend or reactivate your subscription to SIRIUS Satellite Radio, you will need to contact SIRIUS Customer Care at 888-539-7474. Have your 12 digit SID (Sirius Identification Number)/ESN (Electronic Serial Number) ready. To retrieve the SID/ESN, turn on the radio, press the [SAT] button and tune to channel zero. Please note that the vehicle will need to be turned on, in Sirius mode, and have an unobstructed view of the sky in order for the radio to receive the activation signal.

1. SATELLITE RADIO Selection Button (SIRIUS Satellite Radio)

Press the [SAT] button to switch to SIRIUS Satellite Radio. It cycles through the different bands as noted below.

SAT1 ➟ SAT2 ➟ SAT3 ➟ SAT1 ➟...

2. Channel Selection Button

- Press [TRACK ⋁] or [SEEK ⋀] button for less than 0.8 second to select previous or next channel.
- Press [TRACK ⋁] or [SEEK ⋀] button for 0.8 or longer to continuously move to previous or next channel.
- If "CATEGORY" Icon is displayed at the top of the screen, channel up/down is done through the channels within current category.

3. SCAN Button

- When the button is pressed, it automatically scans the radio stations upwards.
- The SCAN feature steps through each channel, starting from the initial channel for ten seconds.
- Press the [SCAN] button again to stop the scan feature and to listen to the currently selected channel.
- If "CATEGORY" Icon is displayed at the top of the screen, channel changing is done through the channels in current category.

4. INFO Selection Button

Displays the information of the channel currently played by in the order of Artist/Song title ➟ Category/Channel name ➟ Composer(if available) ➟ Artist/Song title ➟ Category/Channel name ➟... (ART/TITLE Selection)

Displays the information of the channel currently played by in the order of Category/Channel name ➟ Artist/Song title ➟ Composer(if available) ➟ Category /Channel name ➟ Artist/Song title ➟... (CAT/CH Selection) (If there is no information of COMPOSER NAME, it returns to main display.)

5. CAT/FOLDER Button

- Press [CAT ⋀] or [FOLDER ⋁] button to enter the Category List Mode, it displays category items and highlights the category that currently tuned channel belongs to.
- On Category List Mode, press these buttons to navigate category list.
- Press [ENTER] button to select the lowest channel in highlighted category.
- If channel is selected by selecting category "CATEGORY" Icon is displayed at the top of the screen.

امداد خودرو فارما
FarmaSOS.com

6. TUNE Knob and ENTER Button

While listening to SIRIUS broadcast, rotate this knob to the right or left to search other channels while listening to current channels and push this knob to select what you want to listen to.

(Turn to the right to search higher channels and left lower channels)

7. Preset Selection Button

- Push [1]~[6] buttons less than 0.8 second to play the channel saved in each button.
- Hold down the [PRESET] button for 0.8 second or longer to save current channel. An audible beep will play to confirm the preset is stored.

✻ Troubleshooting

1. Antenna Error

If this message is displayed, the antenna or antenna cable is broken or unplugged. Please consult with your Kia dealership.

2. Acquiring Signal

If this message is displayed, it means that the antenna is covered and that the SIRIUS Satellite Radio signal is not available. Ensure the antenna is uncovered and has a clear view of the sky.

تلفن شبانه روزی: ۰۲۱-۸۸۸۶۲۰۸۵

FarmaSOS.com

⚠ CAUTION IN USING BLUETOOTH® CELLULAR PHONE

- *Do not use a cellular phone or perform Bluetooth® settings (e.g. pairing a phone) while driving.*
- *Some Bluetooth®-enabled phones may not be recognized by the system or fully compatible with the system.*
- *Before using Bluetooth® related features of the audio system, refer your phone's User's Manual for phone-side Bluetooth® operations.*
- *The phone must be paired to the audio system to use Bluetooth® related features.*
- *You will not be able to use the hands-free feature when your phone (in the car) is outside of the cellular service area (e.g. in a tunnel, in a underground, in a mountainous area, etc.).*
- *If the cellular phone signal is poor or the vehicles interior noise is too loud, it may be difficult to hear the other person's voice during a call.*

(Continued)

(continued)

- *Do not place the phone near or inside metallic objects, otherwise communications with Bluetooth® system or cellular service stations can be disturbed.*
- *While a phone is connected through Bluetooth® your phone may discharge quicker than usual for additional Bluetooth®-related operations.*
- *Some cellular phones or other devices may cause interference noise or malfunction to audio system. In this case, store the device in a different location may resolve the situation.*

امداد خودرو فارما
تلفن شبانه روزی: ۰۲۱-۸۸۸۶۱۰۸۸
FarmaSOS.com

BLUETOOTH® PHONE OPERATION (IF EQUIPPED)

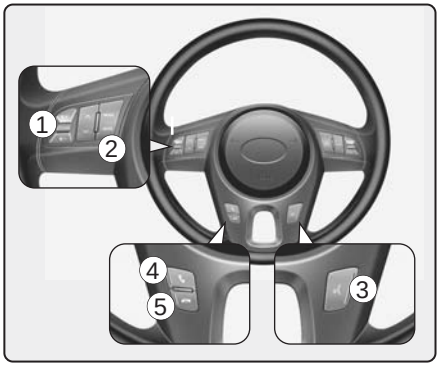

1. VOLUME button : Raises or lowers speaker volume.
2. MUTE : Mute the microphone during a call.
3. button : Activates voice recognition.
4. button : Places and transfers calls.
5. button : Ends calls or cancels functions.

■ What is Bluetooth®?

Bluetooth® is a wireless technology that allows multiple devices to be connected in a short range, low-powered devices like hands-free, stereo headset, wireless remocon, etc. For more information, visit the Bluetooth® website at *www.Bluetooth.com*

■ General Features

- This audio system supports Bluetooth® hands-free and stereo-headset features.
  - HANDS-FREE feature: Making or receiving calls wirelessly through voice recognition.
  - STEREO-HEADSET feature: Playing music from cellular phones (that supports A2DP feature) wirelessly.
- Voice recognition engine of the Bluetooth® system supports 3 types of languages:
  - English
  - Canadian French
  - US Spanish

تلفن شبانه روزی: ۰۲۱-۸۸۸۲۰۰۸۵
FarmaBIS.com

✻ NOTICE

- **The phone must be paired to the system before using Bluetooth® features.**
- **Only one selected (linked) cellular phone can be used with the system at a time.**
- **Some phones are not fully compatible with this system.**
- **The Bluetooth® word mark and logos are registered trademarks owned by Bluetooth® SIG, Inc. and any use of such marks by Kia is under license. A Bluetooth enabled cell phone is required to use Bluetooth® wireless technology.**

■ Bluetooth® Language Setting

The system language can be changed by the following steps:

1. Power on the audio system with the volume set to an audible level.
2. Press and hold button on the steering wheel until the audio displays “Please Wait”.
   - The Bluetooth® system will reply in currently selected language that it is changing to the next language.
   - System language cycles between English, Canadian French and US Spanish.
   - Press and hold the button on the steering wheel for over 10 seconds.
3. When completed, the audio display returns to normal.
4. Repeat steps 2 and 3 for the next language selection.

NOTE:

The phone needs to be paired again after changing system language.

- **Avoid resting your thumb or finger on the button as the language could unintentionally change.**

■ Receiving a Phone Call

When receiving a phone call, a ringtone is audible from speakers and the audio system changes into telephone mode.

When receiving a phone call, “Incoming call” message and incoming phone number (if available) are displayed on the audio.

• To Answer a Call:
- Press button on the steering wheel.
• To Reject a Call:
- Press button on the steering wheel.
• To Adjust Ring Volume:
- Use VOLUME buttons on the steering wheel.
• To Transfer a Call to the Phone (Secret Call):
- Press and hold button on the steering wheel until the audio system transfers a call to the phone.

■ Talking on the Phone

When talking on the phone, “Active Call” message and the other party’s phone number (if available) are displayed on the audio.

• To Finish a Call
- Press button on the steering wheel.

✻ NOTICE

In the following situations, you or the other party may have difficulty hearing each other:

1. **Speaking at the same time, your voice may not reach each other parties. (This is not a malfunction.) Speak alternately with the other party on the phone.**
2. **Keep the Bluetooth® volume to a low level. High-level volume may result in distortion and echo.**
3. **When driving on a rough road.**
4. **When driving at high speeds.**
5. **When the window is open.**
6. **When the air conditioning vents are facing the microphone.**
7. **When the sound of the air conditioning fan is loud.**

■ Bluetooth® Audio Music Streaming

The audio system supports Bluetooth® A2DP (Audio Advanced Distribution Profile) and AVRCP (Audio Video Remote Control Profile) technologies.

Both profiles provide steaming of music via compatible “PAIRED” Bluetooth® Cellular phone.

To stream music from the Bluetooth® cellular phone, play your music files on your cellular phone according to your cellular phone user’s manual and press the AUX button on the audio system until “MP3 play” is displayed on the LCD.

The audio system head unit displays ‘MP3 MODE’.

NOTE:

- **In addition to streaming MP3 files, all music and sound files your cellular phone supports can be played by the audio system.**
- **Bluetooth® compatible cellular phones must include A2DP and AVRCP capabilities.**
- **Some A2DP and AVRCP compatible Bluetooth® cellular phones may not play music through the audio system initially. These cellular phones may need to have the Bluetooth® streaming enabled, for example;**
  i.e : Menu➞Filemanager➞Music➞ Option➞Play via Bluetooth
- **Please refer to User's Guide for your cellular phone for more information. To cancel Bluetooth® cellular phone music streaming, stop music playback on the cellular phone or change the audio mode to AM/FM, SIRIUS, CD, iPod, ect.**

■ Phone Setup

All Bluetooth® related operations can be performed in PHONE menu.

1) Push the SETUP button to enter SETUP mode.
2) Select "PHONE" item by rotating the TUNE knob, then push the knob.

3) Select desired item by rotating the TUNE knob, then push the knob.

• Pairing a phone

Before using Bluetooth® features, the phone must be paired (registered) with the audio system. Up to 5 phones can be paired with the system.

NOTE:

- **The pairing procedure of the phone varies according to each phone model. Before attempting to pair phone, please see your phone's User's Guide for instructions.**
- **Once pairing with the phone is completed, there is no need to pair with that phone again unless the phone is deleted manually from the audio system (refer "Deleting a Phone" section) or the vehicle's information is removed from the phone.**

① Press SETUP button to enter SETUP mode.
② Select "PHONE", then "PAIR" in PHONE menu.
③ The audio displays "Device : [Name] passkey: 0000"
④ Search and select the device name in your mobile phone to starting the pairing process.

NOTE:

- **If the phone is paired with two or more vehicles of the same model, some phones may not handle Bluetooth® devices of that name correctly. In this case, you may need to change the name displayed on your phone.**
  For example, if the vehicles' name is KMC CAR, you may need to change the name displayed on you phone from KMC_CAR to JOHNS_CAR or KMC CAR_1 to avoid ambiguity.
  Refer to your phone User's Guide, or contact your cellular carrier or phone manufacturer for instructions.

- **Connecting a phone**

When the Bluetooth® system is enabled, the phone previously used is automatically selected and re-connected. If you want to select different phone previously paired, the phone can be selected through "Select Phone" menu.

Only a selected phone can be used with the hands-free system at a time.

① Press SETUP button to enter SETUP mode.

② Select "PHONE", then "SELECT" in PHONE menu.

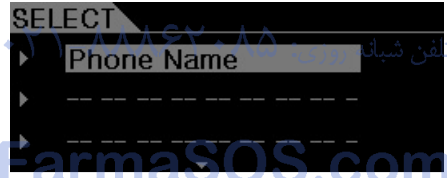

③ Select desired phone name from the list shown.

④ The Bluetooth® icon appears on the upper side of audio display when a phone is connected.

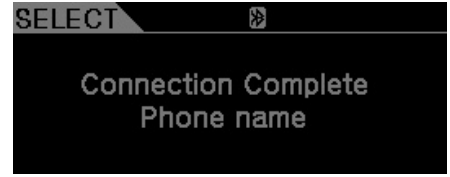

امداد خودرو فارما
تلفن شبانه روزی: ۰۲۱۸۸۸۶۳۰۸۵
FarmaSOS.com

• Changing Priority

If several phones are paired with the audio system, the system attempts to connect following order when the Bluetooth® system is enabled:

1) “Priority” checked phone.
2) Previously connected phone
3) Gives up auto connection.

① Press SETUP button to enter SETUP mode.
② Select “PHONE”, then “PRIORITY” in PHONE menu.
③ Select desired phone name from the list shown.

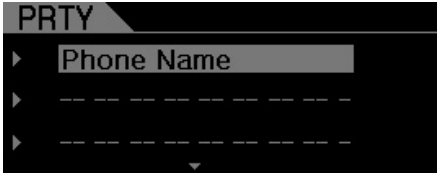

• Deleting a Phone

The paired phone can be deleted.

- When the phone is deleted, all the information associated with that phone is also deleted (including phonebook).
- If you want to use the deleted phone with the audio system again, pairing procedure must be completed once more.

① Press SETUP button to enter SETUP mode.
② Select “PHONE”, then “DELETE” in PHONE menu.
③ Select desired phone name from the list shown.

FarmaSOS.com

• ADVANCED Menu

After pressing the SETUP button, select the “PHONE” menu. while in PHONE menu, select the “ADVANCED” menu to make Bluetooth® Phone settings.(The ADVANCED menu may differ according to audio specifications.)

Incoming Volume (Bluetooth® call volume adjustments)

While in ADVANCED menu, select “IN VOL.” Use the knob key to set the desired volume and press the ENTER button.

Contacts Sync (Automatic Phonebook download setting)

While in Advanced menu, select "Contacts" To automatically save the contacts and call history in your mobile phone each time you connect a mobile device, select ON. If you do not wish for automatic download, select OFF.

It's not available to make a phone call by bluetooth audio system while the phonebook is being downloaded.

Bluetooth® system off

While in Advanced menu, select "BT Off" to turn off the Bluetooth® System.

■ Voice Recognition Activation

- The voice recognition engine contained in the Bluetooth® System can be activated in the following conditions:
  - Button Activation
    The voice recognition system will be active when the button is pressed and after the sound of a Beep.
  - Active Listening
    The voice recognition system will be active for a period of time when the Voice Recognition system has asked for a customer response.

- The system can recognize single digits from zero to nine while number greater than ten will not be recognized.

- The system shall cancel voice recognition mode in following cases : When pressing the button and saying “cancel” following the beep. When not making a call and pressing the button. When voice recognition has failed 3 consecutive times.

- At any time if you say “help”, the system will announce what commands are available.

■ Menu tree

The menu tree identifies available voice recognition Bluetooth® functions.

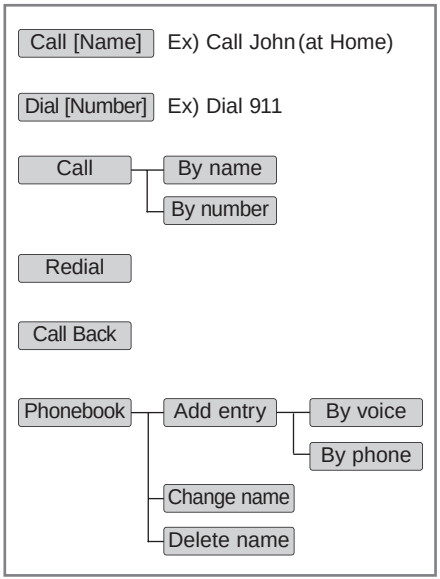

✱Tip

■ Voice Operation

To get the best performance out of the Voice Recognition System, observe the followings:

- Keep the interior of the vehicle as quiet as possible. Close the window to eliminate surrounding noise (traffic noise, vibration sounds, etc), which may disturb recognizing the voice command correctly.
- Speak a command after a beep sound within 5 seconds. Otherwise the command will not be received properly.
- Speak in a natural voice without pausing between words.
- While receiving voice commands, press the button on the steering wheel remote controller to terminate guidance. Voice command will convert back to waiting mode to allow the user to say a new voice command.

■ Making a Phone Call

• Direct Calling

① Press button.

② Say the following command.

- Call <John> : Connects the call to John.
- Call <John> on <Mobile> : Connects the call to John's mobile phone number.
- Call <John> at <Home> : Connects the call to john's home number.
- Call <John> in <Office> : Connects the call to John's office number.

Note:

Calls can be immediately connected to contacts who name or voice tag are saved in the phonebook(or contacts).

FarmaSOS.com

• Calling by Name

A phone call can be made by speaking names registered in the audio system.

① Press button.

② Say "Call".

③ Say "By name" when prompted.

④ Say desired name (in Phonebook or voice tag).

⑤ Say desired location (phone number type). Only stored locations can be selected.

⑥ Say "Yes" to confirm and make a call.

✻ Tip

A shortcut to each of the following functions is available:
1. Say "Call Name"

• Dialing by Number

A phone call can be made by dialing the spoken numbers. The system can recognize single digits from zero to nine.

① Press button.
② Say "Call".
③ Say "By number" when prompted.
④ Say desired phone numbers.
⑤ Say "Dial" to complete the number and make a call.

✻ Tip

A shortcut to each of the following functions is available:
① Say "Dial Number"
② Say "Dial <digit>"

■ Phone Book (In-Vehicle)

• Adding entry by voice

Phone numbers and voice tags can be registered. Entries registered in the phone can also be transferred.

① Press button.
② Say "Phonebook".
- The system replies with all available commands.
- To skip the information message, press again and then a beep is heard.

③ Say "Add Entry".
④ Say "By Voice" to proceed.
⑤ Say the name of the entry when prompted.
⑥ Say "Yes" to confirm.
⑦ Say the phone number of that entry when prompted.
⑧ Say "Store" if phone number input is finished.
⑨ Say a phone number type. "Home", "Work", "Mobile", "Other" or "Default" is available.
⑩ Say "Yes" to complete adding entry.
⑪ Say "Yes" to store additional location for this contact, or say "Cancel" to finish the process.

FarmaSOS.com

✻ NOTICE

- **The system can recognize single digits from zero to nine. Numbers that are ten or greater cannot be recognized.**
- **You can enter each digit individually or group digits together in preferred string lengths.**
- **To speed up input, it is a good idea to group all digits into a continuous string.**
- **Recommend to enter the numbers constituted an grouping within all digit numbers to dial 995 / 734 / 0000**
- **The display corresponding to each operation appears on the screen as follows:**

Input operation example:
1. Say: "Nine, nine, five"
➞ Display: "995"
2. And say: "Seven, three, four"
➞ Display: "995734"

• Adding Entry by Phone

① Press button.
② Say "Phonebook".
③ Say "Add Entry" after prompt.
④ Say "By Phone" to proceed.
⑤ Say “Yes” to confirm.
⑥ Your phone will start to transfer phone/contact list to the audio system. This process may take over 10 minutes depending on the phone model and number of entries
⑦ Wait till the audio displays “Transfer Complete” message.

• Changing Name

The registered names can be modified.

① Press button.
② Say “Phonebook”.
③ Say “Change Name” after prompt.
④ Say the name of the entry (voice tag).
⑤ Say “Yes” to confirm.
⑥ Say new desired name.

• Deleting Name

The registered names can be deleted.

① Press button.
② Say “Phonebook”.
③ Say “Delete Name” after prompt.
④ Say the name of the entry (voice tag).
⑤ Say “Yes” to confirm.

امداد خودرو فارما
تلفن شبانه روزی: ۰۲۱-۸۸۸۶۲۰۸۵
FarmaSOS.com

■ Bluetooth® Audio Speaker Adaptation

Speaker adaptation will improve performance of voice recognition system to a particular user voice.

This will degrade the performance for other users.

• Record

① Press button for 10sec.
② Say “Record profile”.
③ Say “Yes”.
④ Say the word displayed on Radio.

• Delete

① Press button for 10sec.
② Say “Delete profile”.
③ Say “Yes”.

■ Key matrix

No.	KEY		Class							
			Paired H/P Empty	Disconnected	Connected		Incoming Call	Outgoing Call	Active Call	2nd Call
					Normal mode	BT SETUP menu				
1		SHORT	Not Paired	Not Connecting	-	-	Accept Call	-	2nd call 1st Call:waiting 2nd Call:active	2nd Call 2nd Call:waiting 1st Call:active
		LONG	-	-	-	-	-	-	Transfer call:secret call	
2		SHORT	VR MODE Cancel	VR MODE Cancel	VR MODE Cancel	VR MODE Cancel	Reject Call	End Call	End Call	End Call
		LONG [10sec]	-	-	Speaker Adaptation (Only English)	Speaker Adaptation (Only English)	-	-	-	-
3		SHORT	Active	Active	Active	Active	-	-	-	-
		LONG [10sec]	Change language	Change language	Change language	Change language	-	-	-	-

امداد خودرو فارما
تلفن شبانه روزی ۰۲۱-۸۸۸۶۲۰۸۵
FarmaSOS.com

Before driving / 5-3
Key positions / 5-4
ENGINE START/STOP button / 5-6
Starting the engine / 5-9
Manual transaxle / 5-12
Automatic transaxle / 5-15
Brake system / 5-23
Cruise control system / 5-33
Economical operation / 5-37
Special driving conditions / 5-39
Winter driving / 5-43

Driving your vehicle

5

Trailer towing / 5-45
Vehicle load limit / 5-46
Vehicle weight / 5-51

امداد خودرو فارما
تلفن خسارت روزی: ۰۲۱-۸۸۸۶۲۰۸۵
FarmaSOS.com

E010000ATD

⚠ WARNING - ENGINE EXHAUST CAN BE DANGEROUS!

Engine exhaust fumes can be extremely dangerous. If, at any time, you smell exhaust fumes inside the vehicle, open the windows immediately.

- **Do not inhale exhaust fumes.**
  Exhaust fumes contain carbon monoxide, a colorless, odorless gas that can cause unconsciousness and death by asphyxiation.
- **Be sure the exhaust system does not leak.**
  The exhaust system should be checked whenever the vehicle is raised to change the oil or for any other purpose. If you hear a change in the sound of the exhaust or if you drive over something that strikes the underneath side of the car, have the exhaust system checked as soon as possible by an authorized KIA dealer.
- **Do not run the engine in an enclosed area.**
  Letting the engine idle in your garage, even with the garage door open, is a hazardous practice. Never run the engine in your garage any longer than it takes to start the engine and back the vehicle out.
- **Avoid idling the engine for prolonged periods with people inside the vehicle.**
  If it is necessary to idle the engine for a prolonged period with people inside the vehicle, be sure to do so only in an open area with the air intake set at "Fresh" and fan operating at one of the higher speeds so fresh air is drawn into the interior.

If you must drive with the trunk open because you are carrying objects that make this necessary:

1. Close all windows.
2. Open side vents.
3. Set the air intake control at "Fresh", the air flow control at "Floor" or "Face" and the fan at one of the higher speeds.

To assure proper operation of the ventilation system, be sure the ventilation air intakes located just in front of the windshield are kept clear of snow, ice, leaves or other obstructions.

ایران خودرو فارما
تلفن شبانه روزی ۰۲۱-۸۸۱۶۲۰۸۵
FarmaSOS.com

BEFORE DRIVING

E020100AUN

Before entering vehicle

- Be sure that all windows, outside mirror(s), and outside lights are clean.
- Check the condition of the tires.
- Check under the vehicle for any sign of leaks.
- Be sure there are no obstacles behind you if you intend to back up.

E020200AUN

Necessary inspections

Fluid levels, such as engine oil, engine coolant, brake fluid, and washer fluid should be checked on a regular basis, with the exact interval depending on the fluid. Further details are provided in Section 7, “Maintenance”.

⚠ WARNING

Driving while distracted can result in a loss of vehicle control, that may lead to an accident, severe personal injury, and death. The driver's primary responsibility is in the safe and legal operation of a vehicle, and use of any handheld devices, other equipment, or vehicle systems which take the driver's eyes, attention and focus away from the safe operation of a vehicle or which are not permissible by law should never be used during operation of the vehicle.

تلفن شبانه روزی: ۰۲۱-۸۸۸۶۲۰۸۵
FarmaSOS.com

E020300AHM

Before starting

- Close and lock all doors.
- Position the seat so that all controls are easily reached.
- Adjust the inside and outside rearview mirrors.
- Be sure that all lights work.
- Check all gauges.
- Check the operation of warning lights when the ignition switch is turned to the ON position.
- Release the parking brake and make sure the brake warning light goes out.

For safe operation, be sure you are familiar with your vehicle and its equipment.

⚠ WARNING

All passengers must be properly belted whenever the vehicle is moving. Refer to “Seat belts” in section 3 for more information on their proper use.

⚠ WARNING

Always check the surrounding areas near your vehicle for people, especially children, before putting a vehicle into D (Drive) or R (Reverse).

⚠ WARNING - Driving under the influence of alcohol or drugs

Drinking and driving is dangerous. Drunk driving is the number one contributor to the highway death toll each year. Even a small amount of alcohol will affect your reflexes, perceptions and judgement.

Driving while under the influence of drugs is as dangerous or more dangerous than driving drunk.

You are much more likely to have a serious accident if you drink or take drugs and drive.

If you are drinking or taking drugs, don't drive. Do not ride with a driver who has been drinking or taking drugs. Choose a designated driver or call a cab.

⚠ WARNING

When you intend to park or stop the vehicle with the engine on, be careful not to depress the accelerator pedal for a long period of time. It may overheat the engine or exhaust system and cause fire.

KEY POSITIONS

OTD059001

E030100AHM

Illuminated ignition switch (if equipped)

Whenever a front door is opened, the ignition switch will illuminate for your convenience, provided the ignition switch is not in the ON position. The light will go off immediately when the ignition switch is turned on. It will also go off after about 30 seconds when the door is closed.

OTD059016

Ignition switch position

E030201AUN

LOCK

The steering wheel locks to protect against theft. The ignition key can be removed only in the LOCK position. When turning the ignition switch to the LOCK position, push the key inward at the ACC position and turn the key toward the LOCK position.

E030202AUN

ACC (Accessory)

The steering wheel is unlocked and electrical accessories are operative.

✻ NOTICE

If difficulty is experienced turning the ignition switch to the ACC position, turn the key while turning the steering wheel right and left to release the tension.

E030203AUN

ON

The warning lights can be checked before the engine is started. This is the normal running position after the engine is started.

Do not leave the ignition switch ON if the engine is not running to prevent battery discharge.

E030204APB

START

Turn the ignition switch to the START position to start the engine. The engine will crank until you release the key; then it returns to the ON position. The brake warning light can be checked in this position.

E030205APB

⚠ WARNING - Ignition switch

- **Never turn the ignition switch to LOCK or ACC while the vehicle is moving. This would result in loss of directional control and braking function, which could cause an accident.**
- **The anti-theft steering column lock is not a substitute for the parking brake. Before leaving the driver's seat, always make sure the shift lever is engaged in 1st gear for the manual transaxle or P (Park) for the automatic transaxle, set the parking brake fully and shut the engine off. Unexpected and sudden vehicle movement may occur if these precautions are not taken.**
- **Never reach for the ignition switch, or any other controls through the steering wheel while the vehicle is in motion. The presence of your hand or arm in this area could cause a loss of vehicle control, an accident and serious bodily injury or death.**

(Continued)

(Continued)

- **Do not place any movable objects around the driver's seat as they may move while driving, interfere with the driver and lead to an accident.**

ENGINE START/STOP BUTTON (IF EQUIPPED)

OTD059002

Illuminated ENGINE START/STOP button

E030100ATD

Whenever the front door is opened, the ENGINE START/STOP button will illuminate for your convenience. The light will go off after about 30 seconds when the door is closed.

ENGINE START/STOP button position

E030701ATD

OFF

Not illuminated

To turn off the engine (START/RUN position) or vehicle power (ON position), press the ENGINE START/STOP button with the shift lever in the P (Park) position. When you press the ENGINE START/STOP button without the shift lever in the P (Park) position, the ENGINE START/STOP button will not change to the OFF position but to the ACC position.

Also, the steering wheel locks when the ENGINE START/STOP button is in the OFF position to protect you against theft. It locks when the door is opened or when you pull out the smart key from the smart key holder.

If the steering wheel is not locked properly when you open the driver's door, the warning chime will sound. Try locking the steering wheel again. If the problem is not solved, have it checked by an authorized KIA dealer.

In addition, if the ENGINE START/STOP button is in the OFF position after the driver's door is opened, the steering wheel will not lock and the warning chime will sound. In such a situation, close the door. Then the steering wheel will lock and the warning chime will stop.

✻ NOTICE

If the steering wheel doesn't unlock properly, the ENGINE START/STOP button will not work. Press the ENGINE START/STOP button while turning the steering wheel right and left to release the tension.

⚠ CAUTION

You are able to turn off the engine (START/RUN) or vehicle power (ON), only when the vehicle is not in motion. In an emergency situation while the vehicle is in motion, you are able to turn the engine off and to the ACC position by pressing the ENGINE START/STOP button for more than 2 seconds or 3 times successively within 3 seconds. If the vehicle is still moving, you can restart the engine without depressing the brake pedal by pressing the ENGINE START/STOP button with the shift lever in the N (Neutral) position.

E030202AHM

ACC(Accessory)

Orange indicator

Press the ENGINE START/STOP button while it is in the OFF position without depressing the brake pedal.
The steering wheel unlocks and electrical accessories are operational.
If the ENGINE START/STOP button is in the ACC position for more than 1 hour, the button is turned off automatically to prevent battery discharge.

E030203AHM

ON

Green indicator

Press the ENGINE START/STOP button while it is in the ACC position without depressing the brake pedal.
The warning lights can be checked before the engine is started. Do not leave the ENGINE START/STOP button in the ON position for a long time. The battery may discharge, because the engine is not running.

تلفن شبانه روزی: ۰۲۱-۸۸۸۶۲۰۸۵
FarmaSOS.com

E030704ATD

START/RUN

Not illuminated

To start the engine, depress the brake pedal and press the ENGINE START/STOP button with the shift lever in the P (Park) or the N (Neutral) position. For your safety, start the engine with the shift lever in the P (Park) position.

✻ NOTICE

If you press the ENGINE START/STOP button without depressing the brake pedal, the engine will not start and the button will change as follow:
OFF ➔ACC ➔ ON ➔ OFF

E030205AHM

✻ NOTICE

If you leave the ENGINE START/ STOP button in the ACC or ON position for a long time, the battery will discharge.

⚠ WARNING

- **Never press the ENGINE START/ STOP button while the vehicle is in motion. This would result in loss of directional control and braking function, which could cause an accident.**
- **The anti-theft steering column lock is not a substitute for the parking brake. Before leaving the driver's seat, always make sure the shift lever is engaged in P (Park), set the parking brake fully and shut the engine off. Unexpected and sudden vehicle movement may occur if these precautions are not taken.**

(Continued)

(Continued)

- **Never reach for the ENGINE START/STOP button or any other controls through the steering wheel while the vehicle is in motion. The presence of your hand or arm in the area could cause loss of vehicle control, an accident and serious bodily injury or death.**
- **Do not place any movable objects around the driver's seat as they may move while driving, interfere with the driver and lead to an accident.**

تلفن شبانه روزی: ۰۲۱-۸۸۸۶۲۰۸۵
FarmaSOS.com

STARTING THE ENGINE

E040000APB

⚠ WARNING

Always wear appropriate shoes when operating your vehicle. Unsuitable shoes (high heels, ski boots,etc.) may interfere with your ability to use the brake, accelerator pedal, and clutch (if equipped).

E040100ATD-EU

Starting the engine with an ignition key (if equipped)

1. Make sure the parking brake is applied.
2. **Manual Transaxle** - Depress the clutch pedal fully and shift the transaxle into Neutral. Keep the clutch pedal and brake pedal depressed while turning the ignition switch to the start position.

   Automatic Transaxle - Place the transaxle shift lever in P (Park). Depress the brake pedal fully.

   You can also start the engine when the shift lever is in the N (Neutral) position.
3. Turn the ignition switch to START and hold it there until the engine starts (a maximum of 10 seconds), then release the key.
4. In extremely cold weather (below -18°C / 0°F) or after the vehicle has not been operated for several days, let the engine warm up without depressing the accelerator.

Whether the engine is cold or warm, it should be started ***without depressing the accelerator.***

⚠ CAUTION

If the engine stalls while the vehicle is in motion, do not attempt to move the shift lever to the P (Park) position. If traffic and road conditions permit, you may put the shift lever in the N (Neutral) position while the vehicle is still moving and turn the ignition switch to the START position in an attempt to restart the engine.

⚠ CAUTION

Do not engage the starter for more than 10 seconds. If the engine stalls or fails to start, wait 5 to 10 seconds before re-engaging the starter. Improper use of the starter may damage it.

FarmaSOS.com

OTD059005

E040300ATD-EU

Starting the engine with a smart key (if equipped)

1. Carry the smart key or leave it inside the vehicle.
2. Make sure the parking brake is firmly applied
3. Place the transaxle shift lever in P (Park).
4. Press the ENGINE START/STOP button while depressing the brake pedal.
5. In extremely cold weather (below -18°C / 0°F) or after the vehicle has not been operated for several days, let the engine warm up without depressing the accelerator.

Whether the engine is cold or warm, it should be started without depressing the accelerator.

- Even if the smart key is in the vehicle, if it is far away from you, the engine may not start.
- When the ENGINE START/STOP button is in the ACC position or above, if any door is opened, the system checks for the smart key. If the smart key is not in the vehicle, the warning "Key is not in vehicle" will illuminate on the LCD display. And if all doors are closed, the chime will sound for 5 seconds. The indicator or warning will turn off while the vehicle is moving. Always have the smart key with you.

⚠ WARNING

The engine will start, only when the smart key is in the vehicle.

Never allow children or any person who is unfamiliar with the vehicle touch the ENGINE START/STOP button or related parts.

⚠ CAUTION

If the engine stalls while the vehicle is in motion, do not attempt to move the shift lever to the P (Park) position. If the traffic and road conditions permit, you may put the shift lever in the N (Neutral) position while the vehicle is still moving and press the ENGINE START/STOP button in an attempt to restart the engine.

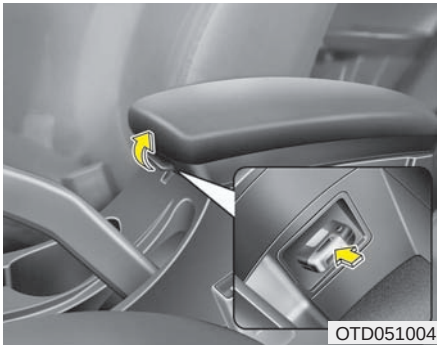
OTD051004

✻ NOTICE

- If the battery is weak or the smart key does not work correctly, you can start the engine by inserting the smart key in the smart key holder. When you pull out the smart key from the smart key holder, press the smart key and pull it out.

(Continued)

(Continued)

- When the stop lamp fuse is blown, you can't start the engine normally. Replace the fuse with a new one. If it is not possible, you can start the engine by pressing the ENGINE START/STOP button for 10 seconds while it is in the ACC position. The engine can start without depressing the brake pedal. But for your safety always depress the brake pedal before starting the engine.

⚠ CAUTION

Do not press the ENGINE START/STOP button for more than 10 seconds except when the stop lamp fuse is blown.

FarmaSOS.com

MANUAL TRANSAXLE (IF EQUIPPED)

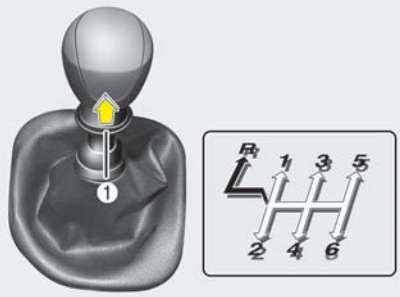

⇨ The shift lever can be moved without pulling the ring (1).

➡ The ring (1) must be pulled while moving the shift lever.

OTD051006

E050000AUN

E050100ATD

Manual transaxle operation

The manual transaxle has 6 forward gears.

This shift pattern is imprinted on the shift knob. The transaxle is fully synchronized in all forward gears so shifting to either a higher or a lower gear is easily accomplished.

Depress the clutch pedal down fully while shifting, then release it slowly.

If your vehicle is equipped with an ignition lock switch, the engine will not start when starting the engine without depressing the clutch pedal.

The shift lever must be returned to the neutral position before shifting into R (Reverse). The ring (1) located below the shift knob must be pulled upward while moving the shift lever to the R (Reverse) position.

Make sure the vehicle is completely stopped before shifting into R (Reverse).

Never operate the engine with the tachometer (rpm) in the red zone.

⚠ CAUTION

- ***When downshifting from fifth gear to fourth gear, caution should be taken not to inadvertently press the shift lever sideways in such a manner that the second gear is engaged. Such a drastic downshift may cause the engine speed to increase to the point that the tachometer will enter the red-zone. Such over-revving of the engine may possibly cause engine and transaxle damage.***
- ***Do not downshift more than 2 gears or downshift the gear when the engine is running at high speed (5,000 RPM or higher). Such a downshifting may damage the engine and transaxle.***

FarmaSOS.com

- During cold weather, shifting may be difficult until the transaxle lubricant is warmed up. This is normal and not harmful to the transaxle.
- If you've come to a complete stop and it's hard to shift into 1st or R (Reverse), leave the shift lever at neutral position and release the clutch. Depress the clutch pedal back down, and then shift into 1st or R (Reverse) gear position.

⚠ CAUTION

- ***To avoid premature clutch wear and damage, do not drive with your foot resting on the clutch pedal. Also, don't use the clutch to hold the vehicle on an uphill grade, while waiting for a traffic light, etc.***
- ***Do not use the shift lever as a handrest during driving, as this can result in premature wear of the transaxle shift forks.***

⚠ WARNING

- **Before leaving the driver's seat, always set the parking brake fully and shut the engine off. Then make sure the transaxle is shifted into 1st gear when the vehicle is parked on a level or uphill grade, and shifted into R (Reverse) on a downhill grade. Unexpected and sudden vehicle movement can occur if these precautions are not followed in the order identified.**

تلفن شبانه روزی: ۰۲۱-۸۸۸۶۲۰۸۵
FarmaSOS.com

E050101APB

Using the clutch

The clutch should be depressed all the way to the floor before shifting, then released slowly. The clutch pedal should always be fully released while driving. Do not rest your foot on the clutch pedal while driving. This can cause unnecessary wear. Do not partially engage the clutch to hold the vehicle on an incline. This causes unnecessary wear. Use the foot brake or parking brake to hold the vehicle on an incline. Do not operate the clutch pedal rapidly and repeatedly.

E050102APB

Downshifting

When you must slow down in heavy traffic or while driving up steep hills, downshift before the engine starts to labor. Downshifting reduces the chance of stalling and gives better acceleration when you need to increase your speed again. When the vehicle is traveling down steep hills, downshifting helps maintain safe speed and prolongs brake life.

E050200APB

Good driving practices

- Never take the vehicle out of gear and coast down a hill. This is extremely hazardous. Always leave the vehicle in gear.
- Don't "ride" the brakes. This can cause them to overheat and malfunction. Instead, when you are driving down a long hill, shift to a lower gear. When you do this, engine braking will help slow down the vehicle.
- Slow down before shifting to a lower gear. This will help avoid over-revving the engine, which can cause damage.
- Slow down when you encounter cross winds. This gives you much better control of your vehicle.
- Be sure the vehicle is completely stopped before you attempt to shift into R (Reverse). The transaxle can be damaged if you do not. To shift into R (Reverse), depress the clutch, move the shift lever to neutral, wait three seconds, then shift to the R (Reverse) position.
- Exercise extreme caution when driving on a slippery surface. Be especially careful when braking, accelerating or shifting gears. On a slippery surface, an abrupt change in vehicle speed can cause the drive wheels to lose traction and the vehicle to go out of control.

⚠ WARNING

- **Always buckle-up! In a collision, an unbelted occupant is significantly more likely to be seriously injured or killed than a properly belted occupant.**
- **Avoid high speeds when cornering or turning.**
- **Do not make quick steering wheel movements, such as sharp lane changes or fast, sharp turns.**
- **The risk of rollover is greatly increased if you lose control of your vehicle at highway speeds.**
- **Losing control often occurs if two or more wheels drop off the roadway and the driver oversteers to reenter the roadway.**
- **In the event your vehicle leaves the roadway, do not steer sharply. Instead, slow down before pulling back into the travel lanes.**
- **Never exceed posted speed limits.**

AUTOMATIC TRANSAXLE (IF EQUIPPED)

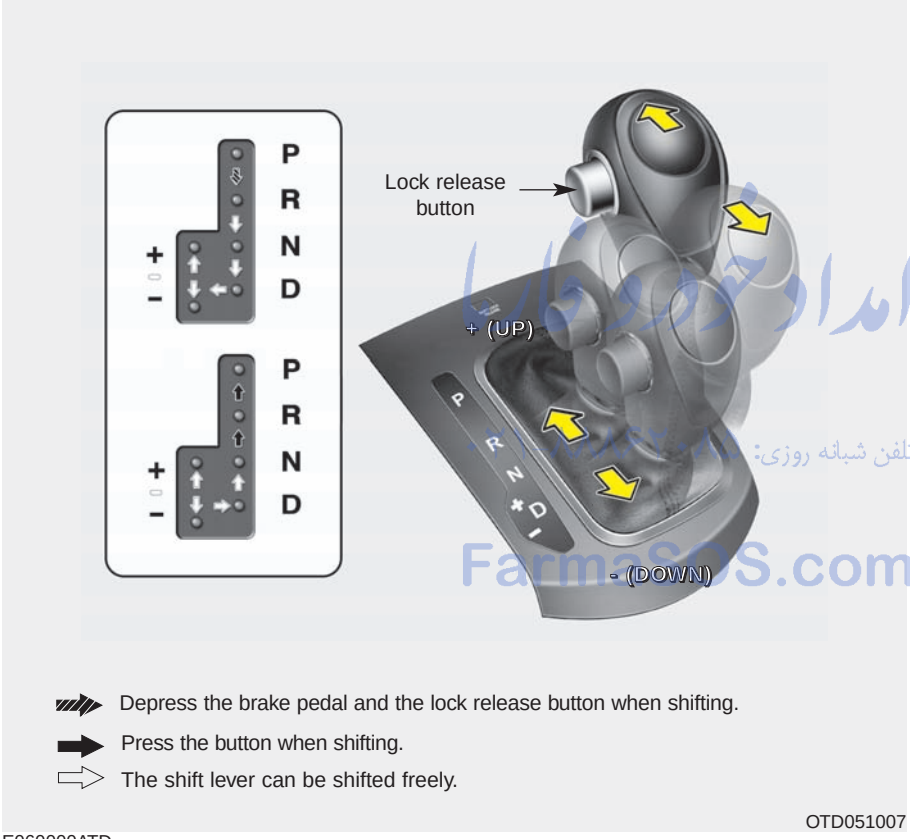

E060000ATD

E060100ATD-EU

Automatic transaxle operation

The automatic transaxle has 6 forward speeds and one reverse speed. The individual speeds are selected automatically, depending on the position of the shift lever.

✻ NOTICE

The first few shifts on a new vehicle, if the battery has been disconnected, may be somewhat abrupt. This is a normal condition, and the shifting sequence will adjust after shifts are cycled a few times by the TCM (Transaxle Control Module) or PCM (Powertrain Control Module).

امداد خودرو ایران
تلفن شبانه روزی:
FarmaSOS.com

For smooth operation, depress the brake pedal when shifting from N (Neutral) to a forward or reverse gear.

⚠ WARNING - Automatic transaxle

- **Always check the surrounding areas near your vehicle for people, especially children, before shifting a shift lever into D (Drive) or R (Reverse).**
- **Before leaving the driver's seat, always make sure the shift lever is in the P (Park) position; then set the parking brake fully and shut the engine off. Unexpected and sudden vehicle movement can occur if these precautions are not followed in the order identified.**

⚠ CAUTION

- ***To avoid damage to your transaxle, do not accelerate the engine in R (Reverse) or any forward gear position with the brakes on.***
- ***When stopped on an upgrade, do not hold the vehicle with engine power. Use the service brake or the parking brake.***
- ***Do not shift from N (Neutral) or P (Park) into D (Drive), or R (Reverse) when the engine is above idle speed.***

تلفن شبانه روزی: ۰۲۱-۸۸۸۶۲۰۸۵
FarmaSOS.com

E060101ATD-EU

Transaxle ranges

The indicator light in the instrument cluster displays the shift lever position when the ignition switch is in the ON position.

P (Park)

Always come to a complete stop before shifting into P (Park). This position locks the transaxle and prevents the front wheels from rotating.

⚠ WARNING

- **Shifting into P (Park) while the vehicle is in motion will cause the drive wheels to lock which will cause you to lose control of the vehicle.**
- **Do not use the P (Park) position in place of the parking brake. Always make sure the shift lever is latched in the P (Park) position and set the parking brake fully.**
- **Never leave a child unattended in a vehicle.**

⚠ CAUTION

The transaxle may be damaged if you shift into P (Park) while the vehicle is in motion.

R (Reverse)

Use this position to drive the vehicle backward.

⚠ CAUTION

Always come to a complete stop before shifting into or out of R (Reverse); you may damage the transaxle if you shift into R (Reverse) while the vehicle is in motion, except when "Rocking the Vehicle" explained in this section.

N (Neutral)

The wheels and transaxle are not engaged. The vehicle will roll freely even on the slightest incline unless the parking brake or service brakes are applied.

FarmaSOS.com

D (Drive)

This is the normal forward driving position. The transaxle will automatically shift through a 6-gear sequence, providing the best fuel economy and power.

For extra power when passing another vehicle or climbing grades, depress the accelerator fully, at which time the transaxle will automatically downshift to the next lower gear.

✻ NOTICE

Always come to a complete stop before shifting into D (Drive).

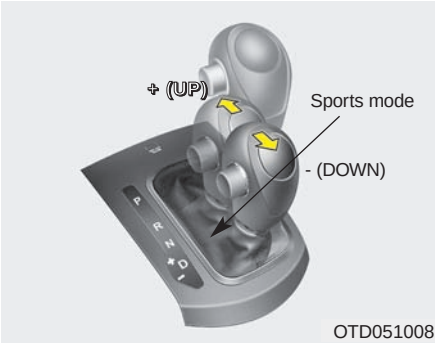

Sports mode

Whether the vehicle is stopped or in motion, sports mode is selected by pushing the shift lever from the D (Drive) position into the manual gate. To return to D (Drive) range operation, push the shift lever back into the main gate.

In sports mode, moving the shift lever backwards and forwards will allow you to make gearshifts rapidly. In contrast to a manual transaxle, the sports mode allows gearshifts with the accelerator pedal depressed.

Up (+) : Push the lever forward once to shift up one gear.

Down (-) : Pull the lever backwards once to shift down one gear.

✻ NOTICE

- **In sports mode, the driver must execute upshifts in accordance with road conditions, taking care to keep the engine speed below the red zone.**
- **In sports mode, only the 6 forward gears can be selected. To reverse or park the vehicle, move the shift lever to the R (Reverse) or P (Park) position as required.**
- **In sports mode, downshifts are made automatically when the vehicle slows down. When the vehicle stops, 1st gear is automatically selected.**
- **In sports mode, when the engine rpm approaches the red zone shift points are varied to upshift automatically.**
- **To maintain the required levels of vehicle performance and safety, the system may not execute certain gearshifts when the shift lever is operated.**

(Continued)

(Continued)

- **When driving on a slippery road, push the shift lever forward into the +(up) position. This causes the transaxle to shift into the 2nd (or 3rd) gear which is better for smooth driving on a slippery road. Push the shift lever to the -(down) side to shift back to the 1st gear.**

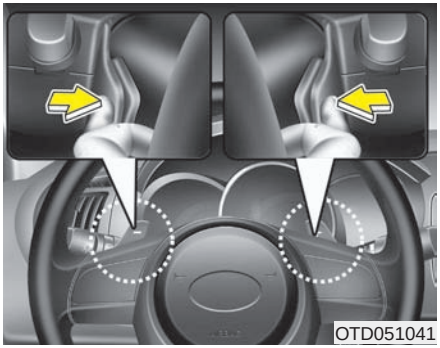

Paddle shifter (if equipped)

The paddle shifter is available when the shift lever is in the D position or the sport mode.

With the shift lever in the D position

The paddle shifter can operate when the vehicle speed is more than 10km/h.

Pull the [+] or [-] paddle shifter once to shift up or down one gear and the system changes from automatic mode to manual mode.

If the vehicle speed is lower than 10km/h, if you depressing the accelerator pedal for more than 7 seconds or if you shift the shift lever from D to sports mode and shift it from sports mode to D again, the system change from manual mode to automatic mode.

With the shift lever in the sports mode

Pull the [+] or [-] paddle shifter once to shift up or down one gear.

✻ NOTICE

If you pull the [+] and [-] paddle shifters at the same time, you can't shift the gear.

FarmaSOS.com

E060102ATD

Shift lock system (if equipped)

For your safety, the automatic transaxle has a shift lock system which prevents shifting the transaxle out of P (Park) unless the brake pedal is depressed.

To shift the transaxle from P (Park) into R (Reverse):

1. Depress and hold the brake pedal.
2. Start the engine or turn the ignition switch to the ON position.
3. Move the shift lever.

If the brake pedal is repeatedly depressed and released with the shift lever in the P (Park) position, a chattering noise near the shift lever may be heard. This is a normal condition.

⚠ WARNING

Always fully depress the brake pedal before and while shifting out of the P (Park) position into another position to avoid inadvertent motion of the vehicle which could injure persons in or around the vehicle.

■ Type A

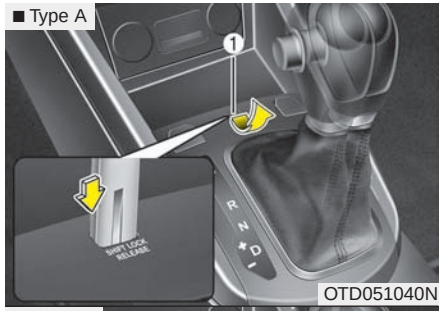

OTD051040N

■ Type B

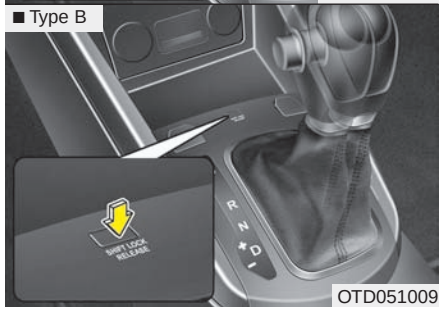

OTD051009

Shift-lock override

If the shift lever cannot be moved from the P (Park) or N (Neutral) position into the R (Reverse) position with the brake pedal depressed, continue depressing the brake, then do the following:

Type A

1. Carefully remove the cap covering the shift-lock access hole (1).
2. Insert a key (or screwdriver) into the access hole and press down on the key (or screwdriver).
3. Move the shift lever.
4. Have your vehicle inspected by an authorized KIA dealer immediately.

Type B

1. Press the shift-lock release button.
2. Move the shift lever.
3. Have your vehicle inspected by an authorized KIA dealer immediately.

امداد خودرو فارما
تلفن شبانه روزی: ۰۲۱-۸۸۸۶۲۰۸۵
FarmaSOS.com

E060103AUN

Ignition key interlock system (if equipped)

The ignition key cannot be removed unless the shift lever is in the P (Park) position.

E060200APB

Good driving practices

- Never move the shift lever from P (Park) or N (Neutral) to any other position with the accelerator pedal depressed.
- Never move the shift lever into P (Park) when the vehicle is in motion.
- Be sure the vehicle is completely stopped before you attempt to shift into R (Reverse) or D (Drive).
- Never take the vehicle out of gear and coast down a hill. This may be extremely hazardous. Always leave the car in gear when moving.
- Do not "ride" the brakes. This can cause them to overheat and malfunction. Instead, when you are driving down a long hill, slow down and shift to a lower gear. When you do this, engine braking will help slow down the vehicle.
- Slow down before shifting to a lower gear. Otherwise, the lower gear may not be engaged.
- Always use the parking brake. Do not depend on placing the transaxle in P (Park) to keep the vehicle from moving.
- Exercise extreme caution when driving on a slippery surface. Be especially careful when braking, accelerating or shifting gears. On a slippery surface, an abrupt change in vehicle speed can cause the drive wheels to lose traction and the vehicle to go out of control.
- Optimum vehicle performance and economy is obtained by smoothly depressing and releasing the accelerator pedal.

امداد خودرو فارما
تلفن شبانه روزی: ۰۲۱-۸۸۸۶۲۰۸۵
FarmaSOS.com

⚠ WARNING

- **Always buckle-up! In a collision, an unbelted occupant is significantly more likely to be seriously injured or killed than a properly belted occupant.**
- **Avoid high speeds when cornering or turning.**
- **Do not make quick steering wheel movements, such as sharp lane changes or fast, sharp turns.**
- **The risk of rollover is greatly increased if you lose control of your vehicle at highway speeds.**
- **Losing control often occurs if two or more wheels drop off the roadway and the driver oversteers to reenter the roadway.**
- **In the event your vehicle leaves the roadway, do not steer sharply. Instead, slow down before pulling back into the travel lanes.**
- **Never exceed posted speed limits.**

⚠ WARNING

If your vehicle becomes stuck in snow, mud, sand, etc., then you may attempt to rock the vehicle free by moving it forward and backward. Do not attempt this procedure if people or objects are anywhere near the vehicle. During the rocking operation the vehicle may suddenly move forward of backward as it becomes unstuck, causing injury or damage to nearby people or objects.

E060203AFD

Moving up a steep grade from a standing start

To move up a steep grade from a standing start, depress the brake pedal, shift the shift lever to D (Drive). Select the appropriate gear depending on load weight and steepness of the grade, and release the parking brake. Depress the accelerator gradually while releasing the service brakes.

امداد خودرو فارما
تلفن شبانه روزی: ۰۲۱-۸۸۸۶۲۰۸۵
FarmaSOS.com

BRAKE SYSTEM

E070100AUN

Power brakes

Your vehicle has power-assisted brakes that adjust automatically through normal usage.

In the event that the power-assisted brakes lose power because of a stalled engine or some other reason, you can still stop your vehicle by applying greater force to the brake pedal than you normally would. The stopping distance, however, will be longer.

When the engine is not running, the reserve brake power is partially depleted each time the brake pedal is applied. Do not pump the brake pedal when the power assist has been interrupted.

Pump the brake pedal only when necessary to maintain steering control on slippery surfaces.

⚠ WARNING - Brakes

- **Do not drive with your foot resting on the brake pedal. This will create abnormal high brake temperatures, excessive brake lining and pad wear, and increased stopping distances.**

(Continued)

(Continued)

- **When descending a long or steep hill, shift to a lower gear and avoid continuous application of the brakes. Continuous brake application will cause the brakes to overheat and could result in a temporary loss of braking performance.**
- **Wet brakes may impair the vehicle's ability to sefely slow down; the vehicle may also pull to one side when the brakes are applied. Applying the brakes lightly will indicate whether they have been affected in this way. Always test your brakes in this fashion after driving through deep water. To dry the brakes, apply them lightly while maintaining a safe forward speed until brake performance returns to normal.**

E070101AUN

In the event of brake failure

If service brakes fail to operate while the vehicle is in motion, you can make an emergency stop with the parking brake. The stopping distance, however, will be much greater than normal.

⚠ WARNING - Parking brake

Applying the parking brake while the vehicle is moving at normal speeds can cause a sudden loss of control of the vehicle. If you must use the parking brake to stop the vehicle, use great caution in applying the brake.

FarmaSOS.com

E070102AHM

Disc brakes wear indicator

When your brake pads are worn and new pads are required, you will hear a high-pitched warning sound from your front brakes or rear brakes (if equipped). You may hear this sound come and go or it may occur whenever you depress the brake pedal.

Please remember that some driving conditions or climates may cause a brake squeal when you first apply (or lightly apply) the brakes. This is normal and does not indicate a problem with your brakes.

⚠ CAUTION

- ***To avoid costly brake repairs, do not continue to drive with worn brake pads.***
- ***Always replace the front or rear brake pads as pairs.***

⚠ WARNING - Brake wear

This brake wear warning sound means your vehicle needs service. If you ignore this audible warning, you will eventually lose braking performance, which could lead to a serious accident.

E070106APB

Rear drum brakes (if equipped)

Your rear drum brakes do not have wear indicators. Therefore, have the rear brake linings inspected if you hear a rubbing noise. Also have your rear brakes inspected each time you change or rotate your tires and when you have the front brakes replaced.

امداد خودرو فارما
تلفن شبانه روزی: ۰۲۱-۸۸۸۶۲۰۸۵
FarmaSOS.com

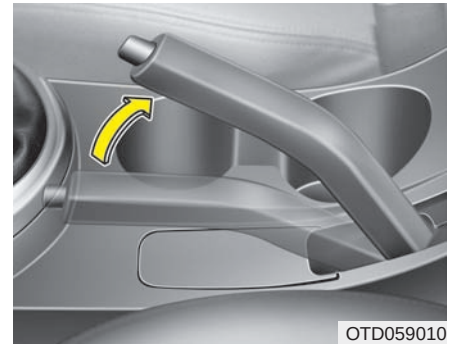
OTD059010

Parking brake

E070201APB

Applying the parking brake

To engage the parking brake, first apply the foot brake and then without pressing the release button in, pull the parking brake lever up as far as possible. In addition it is recommended that when parking the vehicle on a gradient, the shift lever should be positioned in the appropriate low gear for manual transaxle vehicles or in the P (Park) position for automatic transaxle vehicles.

⚠ CAUTION

Driving with the parking brake applied will cause excessive brake pad (or lining) and brake rotor wear.

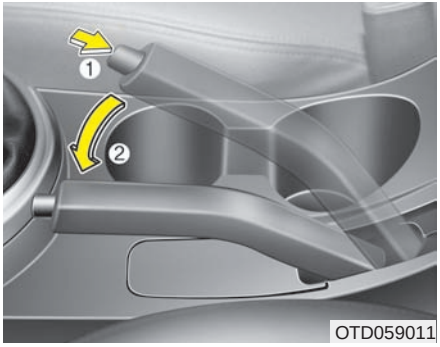

OTD059011

E070202APB

Releasing the parking brake

To release the parking brake, first apply the foot brake and pull up the parking brake lever slightly. Secondly, press the release button (1) and lower the parking brake lever (2) while holding the button.

⚠ WARNING

- **To prevent unintentional movement when stopped and leaving the vehicle, do not use the shift lever instead of the parking brake. Set the parking brake AND make sure the shift lever is securely positioned in 1st (First) gear or R (Reverse) for manual transaxle equipped vehicles and in P (Park) for automatic transaxle equipped vehicles.**
- **Never allow anyone who is unfamiliar with the vehicle to touch the parking brake. If the parking brake is released unintentionally, serious injury may occur.**
- **All vehicles should always have the parking brake fully engaged when parking to avoid inadvertent movement of the vehicle which can injure occupants or pedestrians.**

Check the brake warning light by turning the ignition switch ON (do not start the engine). This light will illuminate when the parking brake is applied with the ignition switch in the START or ON position.

Before driving, be sure the parking brake is fully released and the brake warning light is off.

If the brake warning light remains on after the parking brake is released while the engine is running, there may be a malfunction in the brake system. Immediate attention is necessary.

If at all possible, stop driving the vehicle immediately. If that is not possible, use extreme caution while operating the vehicle and only continue to drive the vehicle until you can reach a safe location or repair shop.

E070300AHM-EC

Anti-lock brake system (ABS)

⚠ WARNING

ABS (or ESC) will not prevent accidents due to improper or dangerous driving maneuvers. Even though vehicle control is improved during emergency braking, always maintain a safe distance between you and objects ahead. Vehicle speeds should always be reduced during extreme road conditions.

The braking distance for vehicles equipped with an anti-lock braking system (Electronic Stability Control System) may be longer than for those without it in the following road conditions.

During these conditions the vehicle should be driven at reduced speeds:

- **Rough, gravel or snow-covered roads.**
- **On roads where the road surface is pitted or has different surface height.**

(Continued)

(Continued)

The safety features of an ABS (or ESC) equipped vehicle should not be tested by high speed driving or cornering. This could endanger the safety of yourself or others.

امداد خودرو فارما
تلفن شبانه روزی: ۰۲۱-۸۸۸۶۲۰۸۵
FarmaSOS.com

The ABS continuously senses the speed of the wheels. If the wheels are going to lock, the ABS system repeatedly modulates the hydraulic brake pressure to the wheels.

When you apply your brakes under conditions which may lock the wheels, you may hear a “tik-tik” sound from the brakes, or feel a corresponding sensation in the brake pedal. This is normal and it means your ABS is active.

In order to obtain the maximum benefit from your ABS in an emergency situation, do not attempt to modulate your brake pressure and do not try to pump your brakes. Press your brake pedal as hard as possible or as hard as the situation allows the ABS to control the force being delivered to the brakes.

✻ NOTICE

A click sound may be heard in the engine compartment when the vehicle begins to move after the engine is started. These conditions are normal and indicate that the anti-lock brake system is functioning properly.

- Even with the anti-lock brake system, your vehicle still requires sufficient stopping distance. Always maintain a safe distance from the vehicle in front of you.
- Always slow down when cornering. The anti-lock brake system cannot prevent accidents resulting from excessive speeds.
- On loose or uneven road surfaces, operation of the anti-lock brake system may result in a longer stopping distance than for vehicles equipped with a conventional brake system.

W-78

⚠ CAUTION

- ***If the ABS warning light is on and stays on, you may have a problem with the ABS. In this case, however, your regular brakes will work normally.***
- ***The ABS warning light will stay on for approximately 3 seconds after the ignition switch is ON. During that time, the ABS will go through self-diagnosis and the light will go off if everything is normal. If the light stays on, you may have a problem with your ABS. Contact an authorized KIA dealer as soon as possible.***

⚠ CAUTION

- ***When you drive on a road with poor traction, such as an icy road, and have operated your brakes continuously, the ABS will be active continuously and the ABS warning light may illuminate. Pull your vehicle over to a safe place and stop the engine.***
- ***Restart the engine. If the ABS warning light is off, then your ABS system is normal. Otherwise, you may have a problem with the ABS. Contact an authorized KIA dealer as soon as possible.***

✻ NOTICE

When you jump start your vehicle because of a drained battery, the engine may not run as smoothly and the ABS warning light may turn on at the same time. This happens because of the low battery voltage. It does not mean your ABS has malfunctioned.

- **Do not pump your brakes!**
- **Have the battery recharged before driving the vehicle.**

امداد خودرو فارما
FarmaCOO.com

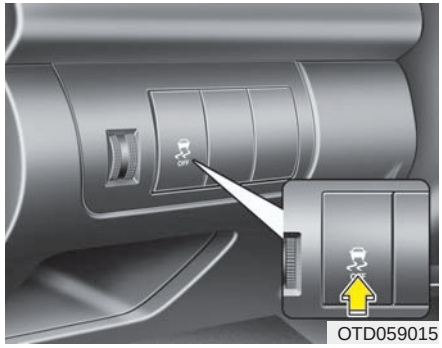

E070500AHM-EU

Electronic stability control (ESC) (If equipped)

The Electronic Stability Control (ESC) system is designed to stabilize the vehicle during cornering maneuvers. ESC checks where you are steering and where the vehicle is actually going. ESC applies the brakes on individual wheels and intervenes with the engine management system to stabilize the vehicle.

⚠ WARNING

Never drive too fast according to the road conditions or too quickly when cornering. Electronic stability control (ESC) will not prevent accidents. Excessive speed in turns, abrupt maneuvers and hydroplaning on wet surfaces can still result in serious accidents. Only a safe and attentive driver can prevent accidents by avoiding maneuvers that cause the vehicle to lose traction. Even with ESC installed, always follow all the normal precautions for driving - including driving at safe speeds for the conditions.

تلفن شبانه روزی: ۰۲۱-۸۸۸۷۱۰۸۵
FarmaSOS.com

The Electronic Stability Control (ESC) system is an electronic system designed to help the driver maintain vehicle control under adverse conditions. It is not a substitute for safe driving practices. Factors including speed, road conditions and driver steering input can all affect whether ESC will be effective in preventing a loss of control. It is still your responsibility to drive and corner at reasonable speeds and to leave a sufficient margin of safety.

When you apply your brakes under conditions which may lock the wheels, you may hear a “tik-tik” sound from the brakes, or feel a corresponding sensation in the brake pedal. This is normal and it means your ESC is active.

✻ NOTICE

A click sound may be heard in the engine compartment when the vehicle begins to move after the engine is started. These conditions are normal and indicate that the Electronic Stability Control System is functioning properly.

E070501AUN-EU

ESC operation

ESC ON condition

- When the ignition is turned ON, ESC and ESC OFF indicator lights illuminate for approximately 3 seconds, then ESC is turned on.
- Press the ESC OFF button for at least half a second after turning the ignition ON to turn ESC off. (ESC OFF indicator will illuminate). To turn the ESC on, press the ESC OFF button (ESC OFF indicator light will go off).
- When starting the engine, you may hear a slight ticking sound. This is the ESC performing an automatic system self-check and does not indicate a problem.

When operating

When the ESC is in operation, ESC indicator light blinks.

- When the Electronic Stability Control is operating properly, you can feel a slight pulsation in the vehicle. This is only the effect of brake control and indicates nothing unusual.
- When moving out of the mud or slippery road, pressing the accelerator pedal may not cause the engine rpm (revolutions per minute) to increase.

تلفن شبانه روزی: ۰۲۱-۸۸۸۶۲۰۸۵
FarmaSOS.com

E070502AUN-EU

ESC operation off

ESC OFF state

- To cancel ESC operation, press the ESC OFF button (ESC OFF indicator light illuminates).
- If the ignition switch is turned to LOCK position when ESC is off, ESC remains off. Upon restarting the engine, the ESC will automatically turn on again.

■ ESC indicator light

■ ESC OFF indicator light

E070503AUN-EU

Indicator light

When the ignition switch is turned ON, the indicator light illuminates, then goes off if ESC system is operating normally.

The ESC indicator light blinks whenever ESC is operating.

The ESC indicator light blinks whenever ESC is operating or illuminates when ESC fails to operate.

The ESC OFF indicator light comes on when the ESC is turned off with the button.

⚠ CAUTION

Driving with varying tire or wheel sizes may cause the ESC system to malfunction. When replacing tires, make sure they are the same size as your original tires.

⚠ WARNING

The Electronic Stability Control system is only a driving aid; use precautions for safe driving by slowing down on curved, snowy, or icy roads. Drive slowly and don't attempt to accelerate whenever the ESC indicator light is blinking, or when the road surface is slippery.

FarmaSOS.com

E070504ATD-EU

ESC OFF usage

When driving

- It's a good idea to keep the ESC turned on for daily driving whenever possible.
- To turn ESC off while driving, press the ESC OFF button while driving on a flat road surface.

Never press the ESC OFF button while ESC is operating (ESC indicator light blinks).

If ESC is turned off while ESC is operating, the vehicle may slip out of control.

✻ NOTICE

- **When operating the vehicle on a dynamometer, ensure that the ESC is turned off (ESC OFF light illuminated). If the ESC is left on, it may prevent the vehicle speed from increasing, and result in false diagnosis.**
- **Turning the ESC off does not affect the ABS or brake system operation.**

⚠ WARNING

Never press the ESC OFF button while ESC is operating.

If the ESC is turned off while ESC is operating, the vehicle may go out of control.

To turn ESC off while driving, press the ESC OFF button while driving on a flat road surface.

E070600ATD

Good braking practices

⚠ WARNING

- **Whenever you leave or park your vehicle, always set the parking brake as far as possible and fully engage the vehicle's transaxle into the P (Park) position. If the parking brake is not fully engaged, the vehicle may move inadvertently and injure yourself and others.**
- **All vehicles should always have the parking brake fully engaged when parking to avoid inadvertent movement of the vehicle which can injure occupants or pedestrians.**

FarmaSOS.com

- Check to be sure the parking brake is not engaged and that the parking brake indicator light is out before driving away.
- Driving through water may get the brakes wet. They can also get wet when the vehicle is washed. Wet brakes can be dangerous! Your vehicle will not stop as quickly if the brakes are wet. Wet brakes may cause the vehicle to pull to one side.

  To dry the brakes, apply the brakes lightly until the braking action returns to normal, taking care to keep the vehicle under control at all times. If the braking action does not return to normal, stop as soon as it is safe to do so and call an authorized KIA dealer for assistance.
- Don't coast down hills with the vehicle out of gear. This is extremely hazardous. Keep the vehicle in gear at all times, use the brakes to slow down, then shift to a lower gear so that engine braking will help you maintain a safe speed.
- Don't "ride" the brake pedal. Resting your foot on the brake pedal while driving can be dangerous because the brakes might overheat and lose their effectiveness. It also increases the wear of the brake components.

- If a tire goes flat while you are driving, apply the brakes gently and keep the vehicle pointed straight ahead while you slow down. When you are moving slowly enough for it to be safe to do so, pull off the road and stop in a safe place.
- If your vehicle is equipped with an automatic transaxle, don't let your vehicle creep forward. To avoid creeping forward, keep your foot firmly on the brake pedal when the vehicle is stopped.
- Be cautious when parking on a hill. Firmly engage the parking brake and place the shift lever in P (automatic transaxle) or in first or reverse gear (manual transaxle). If your vehicle is facing downhill, turn the front wheels into the curb to help keep the vehicle from rolling. If your vehicle is facing uphill, turn the front wheels away from the curb to help keep the vehicle from rolling. If there is no curb or if it is required by other conditions to keep the vehicle from rolling, block the wheels.
- Under some conditions your parking brake can freeze in the engaged position. This is most likely to happen when there is an accumulation of snow or ice around or near the rear brakes or if the brakes are wet. If there is a risk that the parking brake may freeze, apply it only temporarily while you put the shift lever in P (automatic transaxle) or in first or reverse gear (manual transaxle) and block the rear wheels so the vehicle cannot roll. Then release the parking brake.
- Do not hold the vehicle on the upgrade with the accelerator pedal. This can cause the transaxle to overheat. Always use the brake pedal or parking brake.

امداد خودرو فارما
تلفن شبانه روزی: ۰۲۱-۸۸۸۷۱۰۸۵
FarmaSOS.com

CRUISE CONTROL SYSTEM (IF EQUIPPED)

E090000AHM-EU

The cruise control system allows you to program the vehicle to maintain a constant speed without depressing the accelerator pedal.

This system is designed to function above approximately 40 km/h (25 mph).

⚠ WARNING

- **If the cruise control is left on, (CRUISE indicator light in the instrument cluster illuminated) the cruise control can be switched on accidentally. Keep the cruise control system off (CRUISE indicator light OFF) when the cruise control is not in use, to avoid inadvertently setting a speed.**
- **Use the cruise control system only when traveling on open highways in good weather.**
- **Do not use the cruise control when it may not be safe to keep the vehicle at a constant speed, for instance, driving in heavy or varying traffic, or on slippery (rainy, icy or snow-covered) or winding roads or over 6% up-hill or down-hill roads.**

(Continued)

(Continued)

- **Pay particular attention to the driving conditions whenever using the cruise control system.**
- **Be careful when driving downhill using the cruise control system, which may increase the vehicle speed.**

⚠ CAUTION

During cruise-speed driving of a manual transaxle vehicle, do not shift into neutral without depressing the clutch pedal, since the engine will be overrevved. If this happens, depress the clutch pedal or release the cruise control ON-OFF switch.

FarmaSOS.com

✻ NOTICE

During normal cruise control operation, when the SET switch is activated or reactivated after applying the brakes, the cruise control will energize after approximately 3 seconds. This delay is normal.

OTD059020L

E090100ATD-EU

To set cruise control speed:

1. Press the CRUISE ON-OFF button on the steering wheel to turn the system on. The CRUISE indicator light in the instrument cluster will illuminate.
2. Accelerate to the desired speed, which must be more than 40 km/h (25 mph).

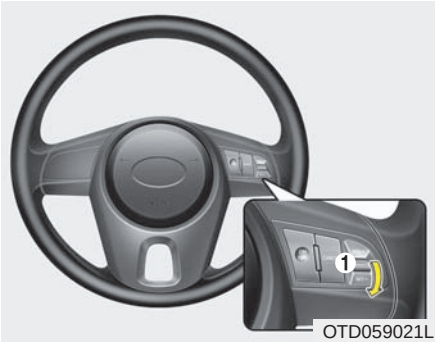

OTD059021L

3. Move the lever (1) down (to SET-), and release it at the desired speed. The SET indicator light in the instrument cluster will illuminate. Release the accelerator at the same time. The desired speed will automatically be maintained.

On a steep grade, the vehicle may slow down or speed up slightly while going downhill.

OTD059022L

E090200ATD-EU

To increase cruise control set speed:

Follow either of these procedures:

- Move the lever (1) up (to RES+) and hold it. Your vehicle will accelerate. Release the lever at the speed you want.
- Move the lever (1) up (to RES+) and release it immediately. The cruising speed will increase by 1.6 km/h (1.0 mph) each time the lever is operated in this manner.

OTD059021L

E090300ATD-EU

To decrease the cruising speed:

Follow either of these procedures:

- Move the lever (1) down (to SET-) and hold it. Your vehicle will gradually slow down. Release the lever at the speed you want to maintain.
- Move the lever (1) down (to SET-) and release it immediately. The cruising speed will decrease by 1.6 km/h (1.0 mph) each time the lever is operated in this manner.

FarmaSOS.com

E090400ATD

To temporarily accelerate with the cruise control on:

If you want to speed up temporarily when the cruise control is on, depress the accelerator pedal. Increased speed will not interfere with the cruise control operation or change the set speed.

To return to the set speed, take your foot off the accelerator.

OTD059023L

E090500ATD-EU

To cancel cruise control, do one of the following:

- Depress the brake pedal.
- Depress the clutch pedal with a manual transaxle.
- Shift into N (Neutral) with an automatic transaxle.
- Press the CANCEL switch.
- Decrease the vehicle speed lower than the memory speed by 15 km/h (9 mph).
- Decrease the vehicle speed to less than approximately 40 km/h (25 mph).

Each of these actions will cancel cruise control operation (the SET indicator light in the instrument cluster will go off), but it will not turn the system off. If you wish to resume cruise control operation, move the lever up (to RES+). You will return to your previously preset speed.

تلفن شبانه روزی
FarmaSOS.com

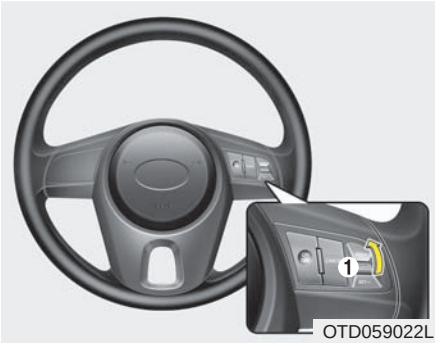

E090600ATD-EU

To resume cruising speed at more than approximately 40 km/h (25 mph):

If any method other than the CRUISE ON-OFF switch was used to cancel cruising speed and the system is still activated, the most recent set speed will automatically resume when you move the lever (1) up (to RES+).

It will not resume, however, if the vehicle speed has dropped below approximately 40 km/h (25 mph).

E090700ATD

To turn cruise control off, do one of the following:

- Press the CRUISE ON-OFF button (the CRUISE indicator light in the instrument cluster will go off).
- Turn the ignition off.

Both of these actions will cancel the cruise control operation. If you want to resume the cruise control operation, repeat the steps provided in "To set cruise control speed" on the previous page.

تلفن شبانه روزی: ۰۲۱-۸۸۸۶۲۰۸۵
FarmaSOS.com

ECONOMICAL OPERATION

E100000AHM-EC

Your vehicle's fuel economy depends mainly on your style of driving, where you drive and when you drive.

Each of these factors affects how many kilometers (miles) you can get from a liter (gallon) of fuel. To operate your vehicle as economically as possible, use the following driving suggestions to help save money in both fuel and repairs:

- Drive smoothly. Accelerate at a moderate rate. Don't make "jack-rabbit" starts or full-throttle shifts and maintain a steady cruising speed. Don't race between stoplights. Try to adjust your speed to the traffic so you don't have to change speeds unnecessarily. Avoid heavy traffic whenever possible. Always maintain a safe distance from other vehicles so you can avoid unnecessary braking. This also reduces brake wear.
- Drive at a moderate speed. The faster you drive, the more fuel your vehicle uses. Driving at a moderate speed, especially on the highway, is one of the most effective ways to reduce fuel consumption.
- Don't "ride" the brake pedal. This can increase fuel consumption and also increase wear on these components. In addition, driving with your foot resting on the brake pedal may cause the brakes to overheat, which reduces their effectiveness and may lead to more serious consequences.
- Take care of your tires. Keep them inflated to the recommended pressure. Incorrect inflation, either too much or too little, results in unnecessary tire wear. Check the tire pressures at least once a month.
- Be sure that the wheels are aligned correctly. Improper alignment can result from hitting curbs or driving too fast over irregular surfaces. Poor alignment causes faster tire wear and may also result in other problems as well as greater fuel consumption.
- Keep your vehicle in good condition. For better fuel economy and reduced maintenance costs, maintain your vehicle in accordance with the maintenance schedule in section 7. If you drive your vehicle in severe conditions, more frequent maintenance is required (see section 7 for details).
- Keep your vehicle clean. For maximum service, your vehicle should be kept clean and free of corrosive materials. It is especially important that mud, dirt, ice, etc. not be allowed to accumulate on the underside of the vehicle. This extra weight can result in increased fuel consumption and also contribute to corrosion.
- Travel lightly. Don't carry unnecessary weight in your vehicle. Weight reduces fuel economy.
- Don't let the engine idle longer than necessary. If you are waiting (and not in traffic), turn off your engine and restart only when you're ready to go.

FarmaSOS.com

- Remember, your vehicle does not require extended warm-up. After the engine has started, allow the engine to run for 10 to 20 seconds prior to placing the vehicle in gear. In very cold weather, however, give your engine a slightly longer warm-up period.
- Don't "lug" or "over-rev" the engine. Lugging is driving too slowly in a very high gear resulting in engine bucking. If this happens, shift to a lower gear. Over-revving is racing the engine beyond its safe limit. This can be avoided by shifting at the recommended speed.
- Use your air conditioning sparingly. The air conditioning system is operated by engine power so your fuel economy is reduced when you use it.
- Open windows at high speeds can reduce fuel economy.
- Fuel economy is less in crosswinds and headwinds. To help offset some of this loss, slow down when driving in these conditions.

امداد خودرو فارما

Keeping a vehicle in good operating condition is important both for economy and safety. Therefore, have an authorized KIA dealer perform scheduled inspections and maintenance.

تلفن شبانه روزی: ۰۲۱-۸۸۸۶۲۰۸۵

⚠ WARNING - Engine off during motion

Never turn the engine off to coast down hills or anytime the vehicle is in motion. The power steering and power brakes will not function properly without the engine running. Instead, keep the engine on and downshift to an appropriate gear for engine braking effect. In addition, turning off the ignition while driving could engage the steering wheel lock resulting in loss of vehicle steering which could cause serious injury or death.

FarmaSOS.com

SPECIAL DRIVING CONDITIONS

E110100APA-EC

Hazardous driving conditions

When hazardous driving conditions are encountered such as water, snow, ice, mud, sand, or similar hazards, follow these suggestions:

- Drive cautiously and allow extra distance for braking.
- Avoid sudden braking or steering.
- When braking with non-ABS brakes pump the brake pedal with a light up-and-down motion until the vehicle is stopped.

⚠ WARNING - ABS

Do not pump the brake pedal on a vehicle equipped with ABS.

- If stalled in snow, mud, or sand, use second gear. Accelerate slowly to avoid spinning the drive wheels.
- Use sand, rock salt, or other non-slip material under the drive wheels to provide traction when stalled in ice, snow, or mud.

⚠ WARNING - Downshifting

Downshifting with an automatic transaxle, while driving on slippery surfaces can cause an accident. The sudden change in tire speed could cause the tires to skid. Be careful when downshifting on slippery surfaces.

تلفن شبانه روزی: ۰۹۱۲-۸۸۸۶۲۰۸۵
FarmaSOS.com

E110200AAM-EU

Rocking the vehicle

If it is necessary to rock the vehicle to free it from snow, sand, or mud, first turn the steering wheel right and left to clear the area around your front wheels. Then, shift back and forth between 1st (First) and R (Reverse) in vehicles equipped with a manual transaxle or R (Reverse) and any forward gear in vehicles equipped with an automatic transaxle. Do not race the engine, and spin the wheels as little as possible. If you are still stuck after a few tries, have the vehicle pulled out by a tow vehicle to avoid engine overheating and possible damage to the transaxle.

⚠ CAUTION

Prolonged rocking may cause engine overheating, transaxle damage or failure, and tire damage.

⚠ WARNING - Spinning tires

Do not spin the wheels, especially at speeds more than 56 km/h (35 mph). Spinning the wheels at high speeds when the vehicle is stationary could cause a tire to overheat which could result in tire damage that may injure bystanders.

✻ NOTICE

The ESC system (if equipped) should be turned OFF prior to rocking the vehicle.

⚠ WARNING

If your vehicle becomes stuck in snow, mud, sand, etc., then you may attempt to rock the vehicle free by moving it forward and backward. Do not attempt this procedure if people or objects are anywhere near the vehicle. During the rocking operation the vehicle may suddenly move forward or backward as it becomes unstuck, causing injury or damage to nearby people or objects.

E110300AUN

Smooth cornering

Avoid braking or gear changing in corners, especially when roads are wet. Ideally, corners should always be taken under gentle acceleration. If you follow these suggestions, tire wear will be held to a minimum.

FarmaSOS.com

E110400AUN

Driving at night

Because night driving presents more hazards than driving in the daylight, here are some important tips to remember:

- Slow down and keep more distance between you and other vehicles, as it may be more difficult to see at night, especially in areas where there may not be any street lights.

- Adjust your mirrors to reduce the glare from other driver's headlights.
- Keep your headlights clean and properly aimed on vehicles not equipped with the automatic headlight aiming feature. Dirty or improperly aimed headlights will make it much more difficult to see at night.
- Avoid staring directly at the headlights of oncoming vehicles. You could be temporarily blinded, and it will take several seconds for your eyes to readjust to the darkness.

E110500AUN

Driving in the rain

Rain and wet roads can make driving dangerous, especially if you're not prepared for the slick pavement. Here are a few things to consider when driving in the rain:

- A heavy rainfall will make it harder to see and will increase the distance needed to stop your vehicle, so slow down.
- Keep your windshield wiping equipment in good shape. Replace your windshield wiper blades when they show signs of streaking or missing areas on the windshield.
- If your tires are not in good condition, making a quick stop on wet pavement can cause a skid and possibly lead to an accident. Be sure your tires are in good shape.
- Turn on your headlights to make it easier for others to see you.
- Driving too fast through large puddles can affect your brakes. If you must go through puddles, try to drive through them slowly.
- If you believe you may have gotten your brakes wet, apply them lightly while driving until normal braking operation returns.

E110600AUN

Driving in flooded areas

Avoid driving through flooded areas unless you are sure the water is no higher than the bottom of the wheel hub. Drive through any water slowly. Allow adequate stopping distance because brake performance may be affected.

After driving through water, dry the brakes by gently applying them several times while the vehicle is moving slowly.

E110700AUN

Highway driving

Tires

Adjust the tire inflation pressures to specification. Low tire inflation pressures will result in overheating and possible failure of the tires.

Avoid using worn or damaged tires which may result in reduced traction or tire failure.

✻ NOTICE

Never exceed the maximum tire inflation pressure shown on the tires.

⚠ WARNING

- **Underinflated or overinflated tires can cause poor handling, loss of vehicle control, and sudden tire failure leading to accidents, injuries, and even death. Always check the tires for proper inflation before driving. For proper tire pressures, refer to "Tires and wheels" in section 8.**
- **Driving on tires with no or insufficient tread is dangerous. Worn-out tires can result in loss of vehicle control, collisions, injury, and even death. Worn-out tires should be replaced as soon as possible and should never be used for driving. Always check the tire tread before driving your vehicle. For further information and tread limits, refer to "Tires and wheels" in section 7.**

Fuel, engine coolant and engine oil

High speed travel consumes more fuel than urban motoring. Do not forget to check both the engine coolant and engine oil.

Drive belt

A loose or damaged drive belt may overheat the engine.

FarmaSOS.com

WINTER DRIVING

E120000ASA

Severe weather conditions in the winter result in greater wear and other problems. To minimize the problems of winter driving, you should follow these suggestions:

E120100AUN-EC

Snowy or Icy conditions

To drive your vehicle in deep snow, it may be necessary to use snow tires on your tires. If snow tires are needed, it is necessary to select tires equivalent in size and type of the original equipment tires. Failure to do so may adversely affect the safety and handling of your car. Furthermore, speeding, rapid acceleration, sudden brake applications, and sharp turns are potentially very hazardous practices.

During deceleration, use engine braking to the fullest extent. Sudden brake applications on snowy or icy roads may cause skids. You need to keep sufficient distance between the vehicle in operation in front and your vehicle. Also, apply the brake gently.

FarmaSOS.com

E120101AUN

Snow tires

If you mount snow tires on your vehicle, make sure they are radial tires of the same size and load range as the original tires. Mount snow tires on all four wheels to balance your vehicle's handling in all weather conditions. Keep in mind that the traction provided by snow tires on dry roads may not be as high as your vehicle's original equipment tires. You should drive cautiously even when the roads are clear. Check with the tire dealer for maximum speed recommendations.

⚠ WARNING - Snow tire size

Snow tires should be equivalent in size and type to the vehicle's standard tires. Otherwise, the safety and handling of your vehicle may be adversely affected.

Do not install studded tires without first checking local, state and municipal regulations for possible restrictions against their use.

E120200AUN

Use high quality ethylene glycol coolant

Your vehicle is delivered with high quality ethylene glycol coolant in the cooling system. It is the only type of coolant that should be used because it helps prevent corrosion in the cooling system, lubricates the water pump and prevents freezing. Be sure to replace or replenish your coolant in accordance with the maintenance schedule in section 7. Before winter, have your coolant tested to assure that its freezing point is sufficient for the temperatures anticipated during the winter.

E120300AUN

Check battery and cables

Winter puts additional burdens on the battery system. Visually inspect the battery and cables as described in section 7. The level of charge in your battery can be checked by an authorized KIA dealer or a service station.

E120400BUN

Change to "winter weight" oil if necessary

In some climates it is recommended that a lower viscosity "winter weight" oil be used during cold weather. See section 8 for recommendations. If you aren't sure what weight oil you should use, consult an authorized KIA dealer.

E120500AUN

Check spark plugs and ignition system

Inspect your spark plugs as described in section 7 and replace them if necessary. Also check all ignition wiring and components to be sure they are not cracked, worn or damaged in any way.

FarmaSOS.com

E120600AUN

To keep locks from freezing

To keep the locks from freezing, squirt an approved de-icer fluid or glycerine into the key opening. If a lock is covered with ice, squirt it with an approved de-icing fluid to remove the ice. If the lock is frozen internally, you may be able to thaw it out by using a heated key. Handle the heated key with care to avoid injury.

E120700AUN

Use approved window washer anti-freeze in system

To keep the water in the window washer system from freezing, add an approved window washer anti-freeze solution in accordance with instructions on the container. Window washer anti-freeze is available from an authorized KIA dealer and most auto parts outlets. Do not use engine coolant or other types of anti-freeze as these may damage the paint finish.

E120800APB

Don't let your parking brake freeze

Under some conditions your parking brake can freeze in the engaged position. This is most likely to happen when there is an accumulation of snow or ice around or near the rear brakes or if the brakes are wet. If there is a risk the parking brake may freeze, apply it only temporarily while you put the shift lever in P (automatic transaxle) or in first or reverse gear (manual transaxle) and block the rear wheels so the vehicle cannot roll. Then release the parking brake.

E120900AHM

Don't let ice and snow accumulate underneath

Under some conditions, snow and ice can build up under the fenders and interfere with the steering. When driving in severe winter conditions where this may happen, you should periodically check underneath the vehicle to be sure the movement of the front wheels and the steering components is not obstructed.

E121000ASA-EC

Carry emergency equipment

Depending on the severity of the weather you should carry appropriate emergency equipment. Some of the items you may want to carry include tow straps or chains, flashlight, emergency flares, sand, a shovel, jumper cables, a window scraper, gloves, ground cloth, coveralls, a blanket, etc.

امداد خودرو فارما
تلفن شبانه روزی: ۰۲۱-۸۸۸۶۲۰۸۵
FarmaSOS.com

TRAILER TOWING

E14000ABH

We do not recommend using this vehicle for trailer towing.

VEHICLE LOAD LIMIT

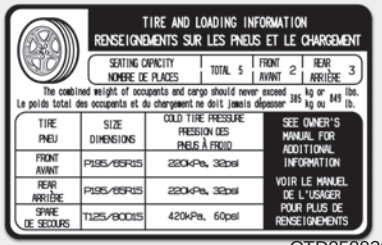

OTD050030N

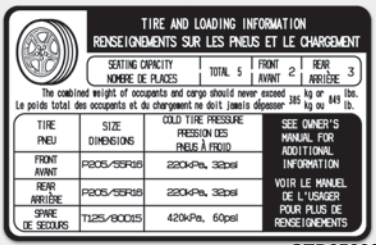

OTD050031N

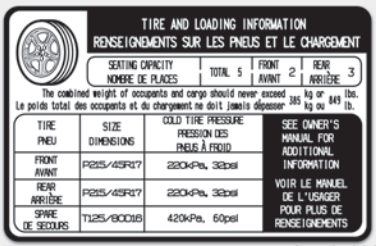

OTD050032N

E150100AUN

Tire and loading information label

The label located on the driver's door sill gives the original tire size, cold tire pressures recommended for your vehicle, the number of people that can be in your vehicle and vehicle capacity weight.

E150101AAM

Vehicle capacity weight:

385 kg (849 lbs.)

Vehicle capacity weight is the maximum combined weight of occupants and cargo. If your vehicle is equipped with a trailer, the combined weight includes the tongue load.

FarmaSOS.com

E150102AAM

Seating capacity:

Total : 5 persons
(Front seat : 2 persons,
Rear seat : 3 persons)

Seating capacity is the maximum number of occupants including a driver, your vehicle may carry.

However, the seating capacity may be reduced based upon the weight of all of the occupants, and the weight of the cargo being carried or towed.

Do not overload the vehicle as there is a limit to the total weight, or load limit including occupants and cargo, the vehicle can carry.

E150103AAM

Towing capacity:

We do not recommend using this vehicle for trailer towing.

E150104AUN

Cargo capacity:

The cargo capacity of your vehicle will increase or decrease depending on the weight and the number of occupants and the tongue load, if your vehicle is equipped with a trailer.

E150105AUN-C1

Steps for determining correct load limit

1. Locate the statement "The combined weight of occupants and cargo should never exceed XXX kg or XXX lbs." on your vehicle's placard.
2. Determine the combined weight of the driver and passengers that will be riding in your vehicle.
3. Subtract the combined weight of the driver and passengers from XXX kg or XXX lbs.
4. The resulting figure equals the available amount of cargo and luggage load capacity. For example, if the "XXX" amount equals 385 kg (849 lbs.), and there will be five 68 kg (150 lbs.) passengers in your vehicle, the amount of available cargo and luggage load capacity is 45 kg (99 lbs.).

   (385-340 (5 x 68) = 45 kg or 849-750 (5 x 150) = 99 lbs.)
5. Determine the combined weight of luggage and cargo being loaded on the vehicle. That weight may not safely exceed the available cargo and luggage load capacity calculated in Step 4.
6. If your vehicle will be towing a trailer, load from your trailer will be transferred to your vehicle. Consult this manual to determine how this reduces the available cargo and luggage load capacity of your vehicle.

✻ NOTICE

We do not recommend using this vehicle for trailer towing.

FarsiSOS.com

Example 1

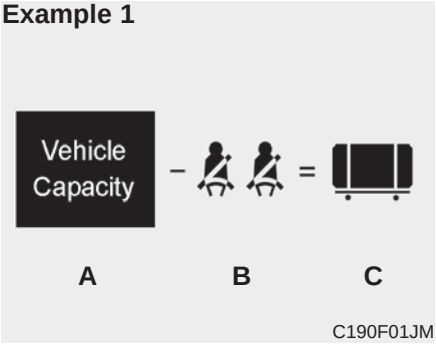

Item	Description	Total
A	Vehicle Capacity Weight	385 kg (849 lbs)
B	Subtract Occupant Weight 68 kg (150 lbs) × 2	136 kg (300 lbs)
C	Available Cargo and Luggage weight	249 kg (549 lbs)

Example 2

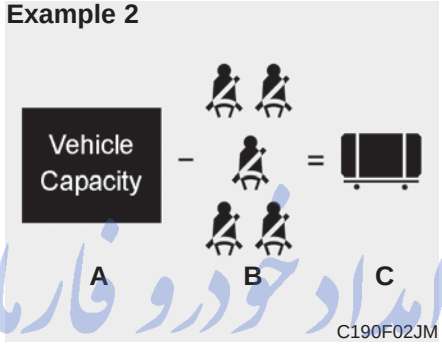

Item	Description	Total
A	Vehicle Capacity Weight	385 kg (849 lbs)
B	Subtract Occupant Weight 68 kg (150 lbs) × 5	340 kg (750 lbs)
C	Available Cargo and Luggage weight	45 kg (99 lbs)

Example 3

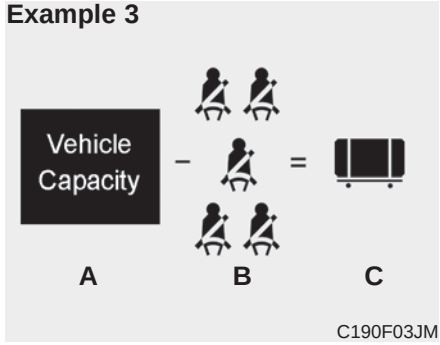

Item	Description	Total
A	Vehicle Capacity Weight	385 kg (849 lbs)
B	Subtract Occupant Weight 73 kg (161 lbs) × 5	365 kg (805 lbs)
C	Available Cargo and Luggage weight	20 kg (44 lbs)

Refer to your vehicle's tire and loading information label for specific information about your vehicle's capacity weight and seating positions. The combined weight of the driver, passengers and cargo should never exceed your vehicle's capacity weight.

امداد خودرو فارما
FarmaSOS.com

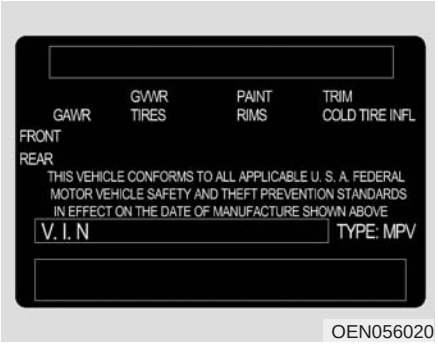

OEN056020

E150200AUN

Certification label

The certification label is located on the driver's door sill at the center pillar.

This label shows the maximum allowable weight of the fully loaded vehicle. This is called the GVWR (Gross Vehicle Weight Rating). The GVWR includes the weight of the vehicle, all occupants, fuel and cargo.

This label also tells you the maximum weight that can be supported by the front and rear axles, called Gross Axle Weight Rating (GAWR).

To find out the actual loads on your front and rear axles, you need to go to a weigh station and weigh your vehicle. Your dealer can help you with this. Be sure to spread out your load equally on both sides of the center-line.

⚠ WARNING - Over loading

- **Never exceed the GVWR for your vehicle, the GAWR for either the front or rear axle and vehicle capacity weight. Exceeding these ratings can cause an accident or vehicle damage. You can calculate the weight of your load by weighing the items (or people) before putting them in the vehicle. Be careful not to overload your vehicle.**

(Continued)

(Continued)

- **Do not load your vehicle any heavier than the GVWR, either the maximum front or rear GAWR and vehicle capacity weight. If you do, parts, including tires on your vehicle can break, and it can change the way your vehicle handles and braking ability. This could cause you to lose control and crash. Also, overloading can shorten the life of your vehicle.**

The label will help you decide how much cargo and installed equipment your vehicle can carry.

If you carry items inside your vehicle - like suitcases, tools, packages, or anything else - they are moving as fast as the vehicle. If you have to stop or turn quickly, or if there is a crash, the items will keep going and can cause an injury if they strike the driver or a passenger.

⚠ WARNING

- **Overloading your vehicle can cause heat buildup in your vehicle's tires and possible tire failure that could lead to a crash.**
- **Overloading your vehicle can cause increased stopping distances that could lead to a crash.**
- **A crash resulting from poor handling vehicle damage, tire failure, or increased stopping distances could result in serious injury or death.**

⚠ CAUTION

- ***Overloading your vehicle may cause damage. Repairs would not be covered by your warranty. Do not overload your vehicle.***
- ***Using heavier suspension components to get added durability might not change your weight ratings. Ask your dealer to help you load your vehicle the right way.***

تلفن شبانه روزی: ۰۲۱-۸۸۸۶۲۰۸۵

FarmaSOS.com

⚠ WARNING - Loose cargo

Items you carry inside your vehicle can strike and injure occupants in a sudden stop or turn, or in a crash.

- **Put items in the cargo area of your vehicle. Try to spread the weight evenly.**
- **Never stack items, like suitcases, inside the vehicle above the tops of the seats.**
- **Do not leave an unsecured child restraint in your vehicle.**
- **When you carry something inside the vehicle, secure it.**
- **Do not drive with a seat folded down unless necessary.**

VEHICLE WEIGHT

E160000AUN

This section will guide you in the proper loading of your vehicle and/or trailer, to keep your loaded vehicle weight within its design rating capability, with or without a trailer. Properly loading your vehicle will provide maximum return of the vehicle design performance. Before loading your vehicle, familiarize yourself with the following terms for determining your vehicle's weight ratings, with or without a trailer, from the vehicle's specifications and the compliance label:

E160100AUN

Base curb weight

This is the weight of the vehicle including a full tank of fuel and all standard equipment. It does not include passengers, cargo, or optional equipment.

E160200AUN

Vehicle curb weight

This is the weight of your new vehicle when you picked it up from your dealer plus any aftermarket equipment.

E160300AUN

Cargo weight

This figure includes all weight added to the Base Curb Weight, including cargo and optional equipment.

E160400AUN

GAW (Gross axle weight)

This is the total weight placed on each axle (front and rear) - including vehicle curb weight and all payload.

E160500AUN

GAWR (Gross axle weight rating)

This is the maximum allowable weight that can be carried by a single axle (front or rear). These numbers are shown on the compliance label.

The total load on each axle must never exceed its GAWR.

E160600AUN

GVW (Gross vehicle weight)

This is the Base Curb Weight plus actual Cargo Weight plus passengers.

E160700AUN-EU

GVWR (Gross vehicle weight rating)

This is the maximum allowable weight of the fully loaded vehicle (including all options, equipment, passengers and cargo). The GVWR is shown on the certification label located on the driver's door sill.

FarmaSOS.com

Road warning / 6-2
In case of an emergency while driving / 6-2
If the engine will not start / 6-3
Emergency starting / 6-4
If the engine overheats / 6-6
If you have a flat tire / 6-7
Towing / 6-15

امداد خودرو فارما
۰۲۱-۸۸۸۶
FarmaSOS.com

What to do in an emergency

6

ROAD WARNING

OTD061001N

F010100AUN

Hazard warning flasher

The hazard warning flasher serves as a warning to other drivers to exercise extreme caution when approaching, overtaking, or passing your vehicle.

It should be used whenever emergency repairs are being made or when the vehicle is stopped near the edge of a roadway.

Depress the flasher switch with the ignition switch in any position. The flasher switch is located in the center console switch panel. All turn signal lights will flash simultaneously.

- The hazard warning flasher operates whether your vehicle is running or not.
- The turn signals do not work when the hazard flasher is on.
- Care must be taken when using the hazard warning flasher while the vehicle is being towed.

امداد خودرو فارما
تلفن شبانه روزی: ۰۲۱۸۸۴۲۰۸۵
FarmaSOS.com

IN CASE OF AN EMERGENCY WHILE DRIVING

F020100AUN-EU

If the engine stalls at a crossroad or crossing

If the engine stalls at a crossroad or crossing, set the shift lever in the N (Neutral) position and then push the vehicle to a safe place.

F020200APB

If you have a flat tire while driving

If a tire goes flat while you are driving:

1. Take your foot off the accelerator pedal and let the vehicle slow down while driving straight ahead. Do not apply the brakes immediately or attempt to pull off the road as this may cause a loss of control. When the vehicle has slowed down to such a speed that it is safe to do so, brake carefully and pull off the road. Drive off the road as far as possible and park on a firm level ground. If you are on a divided highway, do not park in the median area between the two traffic lanes.
2. When the vehicle is stopped, turn on your emergency hazard flashers, set the parking brake and put the transaxle in P (automatic transaxle) or reverse (manual transaxle).

3. Have all passengers get out of the vehicle. Be sure they all get out on the side of the vehicle that is away from traffic.
4. When changing a flat tire, follow the instruction provided later in this section.

F020300AHM

If engine stalls while driving

1. Reduce your speed gradually, keeping a straight line. Move cautiously off the road to a safe place.
2. Turn on your emergency flashers.
3. Try to start the engine again. If your vehicle will not start, contact an authorized KIA dealer or seek other qualified assistance.

IF THE ENGINE WILL NOT START

F030100APB

If the engine doesn't turn over or turns over slowly

1. If your vehicle has an automatic transaxle, be sure the shift lever is in N (Neutral) or P (Park) and the emergency brake is set.
2. Check the battery connections to be sure they are clean and tight.
3. Turn on the interior light. If the light dims or goes out when you operate the starter, the battery is discharged.
4. Check the starter connections to be sure they are securely tightened.
5. Do not push or pull the vehicle to start it. See instructions for "Jump starting".

تلفن شبانه روزی: ۰۲۱-۸۸۸۶۲۰۸۵

⚠ WARNING

If the engine will not start, do not push or pull the vehicle to start it. This could result in a collision or cause other damage. In addition, push or pull starting may cause the catalytic converter to overload and create a fire hazard.

FarmaSOS.com

F030200AHM

If engine turns over normally but does not start

1. Check fuel level.
2. With the ignition switch in the LOCK position, check all connectors at the ignition coil and spark plugs. Reconnect any that may be disconnected or loose.
3. Check the fuel line in the engine compartment.
4. If the engine still does not start, call an authorized KIA dealer or seek other qualified assistance.

EMERGENCY STARTING

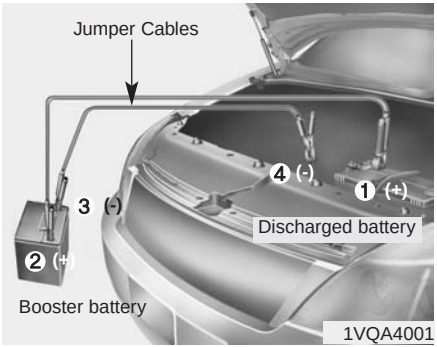

F040000AUN

Connect cables in numerical order and disconnect in reverse order.

F040100AHM-U1

Jump starting

Jump starting can be dangerous if done incorrectly. Therefore, to avoid harm to yourself or damage to your vehicle or battery, follow these jump starting procedures. If in doubt, we strongly recommend that you have a competent technician or towing service jump start your vehicle.

⚠ CAUTION

Use only a 12-volt jumper system. You can damage a 12-volt starting motor, ignition system, and other electrical parts beyond repair by use of a 24-volt power supply (either two 12-volt batteries in series or a 24-volt motor generator set).

⚠ WARNING - Battery

Never attempt to check the electrolyte level of the battery as this may cause the battery to rupture or explode causing serious injury.

⚠ WARNING - Battery

- **Keep all flames or sparks away from the battery. The battery produces hydrogen gas which may explode if exposed to flame or sparks.**
  If these instructions are not followed exactly, serious personal injury and damage to the vehicle may occur! If you are not sure how to follow this procedure, seek qualified assistance. Automobile batteries contain sulfuric acid. This is poisonous and highly corrosive. When jump starting, wear protective glasses and be careful not to get acid on yourself, your clothing or on the vehicle.
- **Do not attempt to jump start the vehicle if the discharged battery is frozen or if the electrolyte level is low; the battery may rupture or explode.**

امداد خودرو فارما
FarmaSOS.com

F040101AUN

Jump starting procedure

1. Make sure the booster battery is 12-volt and that its negative terminal is grounded.
2. If the booster battery is in another vehicle, do not allow the vehicles to touch.
3. Turn off all unnecessary electrical loads.
4. Connect the jumper cables in the exact sequence shown in the illustration. First connect one end of a jumper cable to the positive terminal of the discharged battery (1), then connect the other end to the positive terminal on the booster battery (2).

   Proceed to connect one end of the other jumper cable to the negative terminal of the booster battery (3), then the other end to a solid, stationary, metallic point (for example, the engine lifting bracket) away from the battery (4). Do not connect it to or near any part that moves when the engine is cranked.

   Do not allow the jumper cables to contact anything except the correct battery terminals or the correct ground. Do not lean over the battery when making connections.

⚠ CAUTION - Battery cables

Do not connect the jumper cable from the negative terminal of the booster battery to the negative terminal of the discharged battery. This can cause the discharged battery to overheat and crack, releasing battery acid.

5. Start the engine of the vehicle with the booster battery and let it run at 2,000 rpm, then start the engine of the vehicle with the discharged battery.

If the cause of your battery discharging is not apparent, you should have your vehicle checked by an authorized KIA dealer.

F040200AUN

Push-starting

Your manual transaxle-equipped vehicle should not be push-started because it might damage the emission control system.

Vehicles equipped with automatic transaxle cannot be push-started.

Follow the directions in this section for jump-starting.

⚠ WARNING

Never tow a vehicle to start it because the sudden surge forward when the engine starts could cause a collision with the tow vehicle.

IF THE ENGINE OVERHEATS

F050000ATD

If your temperature gauge indicates overheating, you will experience a loss of power, or hear loud pinging or knocking, the engine is probably too hot. If this happens, you should:

1. Pull off the road and stop as soon as it is safe to do so.
2. Place the shift lever in P (automatic transaxle) or neutral (manual transaxle) and set the parking brake. If the air conditioning is on, turn it off.
3. If engine coolant is running out under the vehicle or steam is coming out from underneath the hood, stop the engine. Do not open the hood until the coolant has stopped running or the steaming has stopped. If there is no visible loss of engine coolant and no steam, leave the engine running and check to be sure the engine cooling fan is operating. If the fan is not running, turn the engine off.
4. Check to see if the water pump drive belt is missing. If it is not missing, check to see that it is tight. If the drive belt seems to be satisfactory, check for coolant leaking from the radiator, hoses or under the vehicle. (If the air conditioning had been in use, it is normal for cold water to be draining from it when you stop).

⚠ WARNING

While the engine is running, keep hair, hands and clothing away from moving parts such as the fan and drive belts to prevent injury.

5. If the water pump drive belt is broken or engine coolant leaks, stop the engine immediately and call the nearest authorized KIA dealer for assistance.

⚠ WARNING

Do not remove the radiator cap when the engine is hot. This can allow coolant to be blown out of the opening and cause serious burns.

FarmaSOS.com

6. If you cannot find the cause of the overheating, wait until the engine temperature has returned to normal. Then, if coolant has been lost, carefully add coolant to the reservoir to bring the fluid level in the reservoir up to the halfway mark.
7. Proceed with caution, keeping alert for further signs of overheating. If overheating happens again, call an authorized KIA dealer for assistance.

⚠ CAUTION

Serious loss of coolant indicates there is a leak in the cooling system and this should be checked as soon as possible by an authorized KIA dealer.

IF YOU HAVE A FLAT TIRE

F070100ATD

Jack and tools

The spare tire, jack, jack handle and wheel lug nut wrench are stored in the luggage compartment.

Remove the luggage under tray out of the way to reach the equipment.

(1) Jack handle

(2) Jack

(3) Wheel lug nut wrench

F070101APB

Jacking instructions

The jack is provided for emergency tire changing only.

To prevent the jack from “rattling” while the vehicle is in motion, store it properly.

Follow jacking instructions to reduce the possibility of personal injury.

امداد خودرو فارما
تلفن شبانه روزی: ۰۲۱-۸۸۸۶۲۰۸۵
FarmaSOS.com

⚠ WARNING - Changing tires

- **Never attempt vehicle repairs in the traffic lanes of a public road or highway.**
- **Always move the vehicle completely off the road and onto the shoulder before trying to change a tire. The jack should be used on firm level ground. If you cannot find a firm level place off the road, call a towing service company for assistance.**
- **Be sure to use the correct front and rear jacking positions on the vehicle; never use the bumpers or any other part of the vehicle for jack support.**

(Continued)

(Continued)

- **The vehicle can easily roll off the jack causing serious injury or death. No person should place any portion of their body under a vehicle that is supported only by a jack; use vehicle support stands.**
- **Do not start or run the engine while the vehicle is on the jack.**
- **Do not allow anyone to remain in the vehicle while it is on the jack.**
- **Make sure any children present are in a secure place away from the road and from the vehicle to be raised with the jack.**

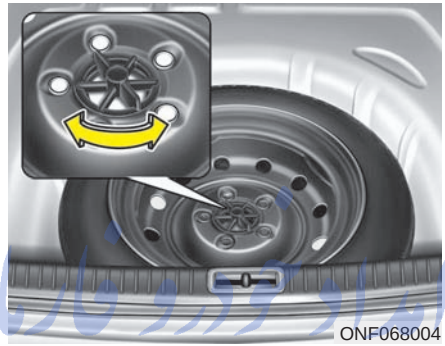

F070200AFD

Removing and storing the spare tire

Turn the tire hold-down wing bolt counterclockwise.

Store the tire in the reverse order of removal.

To prevent the spare tire and tools from “rattling” while the vehicle is in motion, store them properly.

F070300ATD-EU

Changing tires

1. Park on a level surface and apply the parking brake firmly.
2. Shift the shift lever into R (Reverse) for manual transaxle or P (Park) for automatic transaxle.
3. Activate the hazard warning flasher.

FarmaSOS.com

1JBA6504

4. Remove the wheel lug nut wrench, jack, jack handle, and spare tire from the vehicle.
5. Block both the front and rear of the wheel that is diagonally opposite the jack position.

⚠ WARNING - Changing a tire

- **To prevent vehicle movement while changing a tire, always set the parking brake fully, and always block the wheel diagonally opposite the wheel being changed.**
- **We recommend that the wheels of the vehicle be chocked, and that no person remain in a vehicle that is being jacked.**

تلفن شبانه روزی: ۰۲۱-۸۸۸۶۲۰۸۵
FarmaSOS.com

OTD069008

6. Loosen the wheel lug nuts counterclockwise one turn each, but do not remove any nut until the tire has been raised off the ground.

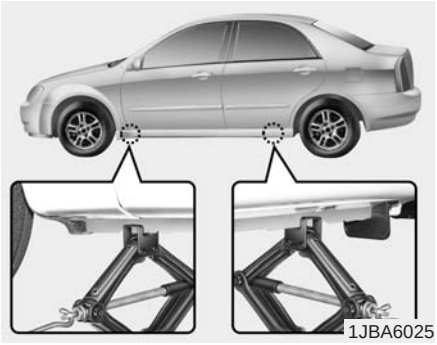
1JBA6025

7. Place the jack at the front or rear jacking position closest to the tire you are changing. Place the jack at the designated locations under the frame. The jacking positions are plates welded to the frame with two tabs and a raised dot to index with the jack.

⚠ WARNING - Jack location
To reduce the possibility of injury, be sure to use only the jack provided with the vehicle and in the correct jack position; never use any other part of the vehicle for jack support.

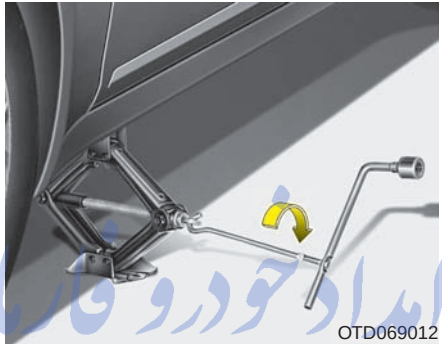
OTD069012

8. Insert the jack handle into the jack and turn it clockwise, raising the vehicle until the tire just clears the ground. This measurement is approximately 30 mm (1 in). Before removing the wheel lug nuts, make sure the vehicle is stable and that there is no chance for movement or slippage.

9. Loosen the wheel nuts and remove them with your fingers. Slide the wheel off the studs and lay it flat so it cannot roll away. To put the wheel on the hub, pick up the spare tire, line up the holes with the studs and slide the wheel onto them. If this is difficult, tip the wheel slightly and get the top hole in the wheel lined up with the top stud. Then jiggle the wheel back and forth until the wheel can be slid over the other studs.

FarnaBOO.com

⚠ WARNING

Wheels and wheel covers may have sharp edges. Handle them carefully to avoid possible severe injury. Before putting the wheel into place, be sure that there is nothing on the hub or wheel (such as mud, tar, gravel, etc.) that prevents with the wheel from fitting solidly against the hub.

If there is, remove it. If the contact of the mounting surface between the wheel and hub is not good the wheel nuts could come loose and cause the loss of a wheel. Loss of a wheel may result in loss of control of the vehicle. This may cause serious injury or death.

10. To install the wheel, hold it on the studs, put the wheel nuts on the studs and tighten them finger tight. Jiggle the tire to be sure it is completely seated, then tighten the nuts as much as possible with your fingers again.
11. Lower the vehicle to the ground by turning the wheel nut wrench counterclockwise.

امداد خودرو فارما
تلفن شبانه روزی: ۰۲۱-۸۸۸۶۲۰۸۵
FarmaSOS.com

OTD069009

Then position the wrench as shown in the drawing and tighten the wheel nuts. Be sure the socket is seated completely over the nut. Do not stand on the wrench handle or use an extension pipe over the wrench handle.

Go around the wheel tightening every nut following the numerical sequence shown in the image until they are tight. Then double-check each nut for tightness. After changing the wheels, have an authorized KIA dealer tighten the wheel nuts to their proper torque as soon as possible.

Wheel nut tightening torque:

Steel wheel & aluminium alloy wheel:

9~11 kg.m (65~79 lb.ft)

If you have a tire gauge, remove the valve cap and check the air pressure. If the pressure is lower than recommended, drive slowly to the nearest service station and inflate to the correct pressure. If it is too high, adjust it until it is correct. Always reinstall the valve cap after checking or adjusting the tire pressure. If the cap is not replaced, air may leak from the tire. If you lose a valve cap, buy another and install it as soon as possible.

After you have changed wheels, always secure the flat tire in its place and return the jack and tools to their proper storage locations.

⚠ CAUTION

Your vehicle has metric threads on the wheel studs and nuts. Make certain during wheel removal that the same nuts that were removed are reinstalled - or, if replaced, that nuts with metric threads and the same chamfer configuration are used. Installation of a non-metric thread nut on a metric stud or vice-versa will not secure the wheel to the hub properly and will damage the stud so that it must be replaced.

Note that most lug nuts do not have metric threads. Be sure to use extreme care in checking for thread style before installing aftermarket lug nuts or wheels. If in doubt, consult an authorized KIA dealer.

⚠ WARNING - Wheel studs

If the studs are damaged, they may lose their ability to retain the wheel. This could lead to the loss of the wheel and a collision resulting in serious injuries.

To prevent the jack, jack handle, wheel lug nut wrench and spare tire from rattling while the vehicle is in motion, store them properly.

⚠ WARNING - Inadequate spare tire pressure

Check the inflation pressures as soon as possible after installing the spare tire. Adjust it to the specified pressure, if necessary. Refer to “Tires and wheels” in section 8.

F070301AUN-EC

Important - use of compact spare tire (if equipped)

Your vehicle is equipped with a compact spare tire. This compact spare tire takes up less space than a regular-size tire. This tire is smaller than a conventional tire and is designed for temporary use only.

⚠ CAUTION

- ***You should drive carefully when the compact spare is in use. The compact spare should be replaced by the proper conventional tire and rim at the first opportunity.***
- ***The operation of this vehicle is not recommended with more than one compact spare tire in use at the same time.***

⚠ WARNING

The compact spare tire is for emergency use only. Do not operate your vehicle on this compact spare at speeds over 80 km/h (50 mph). The original tire should be repaired or replaced as soon as is possible to avoid failure of the spare possibly leading to personal injury or death.

The compact spare should be inflated to 420 kPa (60 psi).

✻ NOTICE

Check the inflation pressure after installing the spare tire. Adjust it to the specified pressure, as necessary.

When using a compact spare tire, observe the following precautions:

- Under no circumstances should you exceed 80 km/h (50 mph); a higher speed could damage the tire.
- Ensure that you drive slowly enough for the road conditions to avoid all hazards. Any road hazard, such as a pothole or debris, could seriously damage the compact spare.
- Any continuous road use of this tire could result in tire failure, loss of vehicle control, and possible personal injury.
- Do not exceed the vehicle's maximum load rating or the load-carrying capacity shown on the sidewall of the compact spare tire.
- Avoid driving over obstacles. The compact spare tire diameter is smaller than the diameter of a conventional tire and reduces the ground clearance approximately 25 mm (1 inch), which could result in damage to the vehicle.

امداد خودرو فاطمی
تلفن شبانه روزی: ۰۲۱-۸۸۸۷۱۰۸۵
FarmaSOS.com

- Do not take this vehicle through an automatic car wash while the compact spare tire is installed.
- The compact spare tire should not be installed on the front axle if the vehicle must be driven in snow or on ice.
- Do not use the compact spare tire on any other vehicle because this tire has been designed especially for your vehicle.
- The compact spare tire's tread life is shorter than a regular tire. Inspect your compact spare tire regularly and replace worn compact spare tires with the same size and design, mounted on the same wheel.
- The compact spare tire should not be used on any other wheels, nor should standard tires, snow tires, wheel covers or trim rings be used with the compact spare wheel. If such use is attempted, damage to these items or other car components may occur.
- Do not use more than one compact spare tire at a time.
- Do not tow a trailer while the compact spare tire is installed.

امداد خودرو فارما
تلفن شبانه روزی: ۰۲۱-۸۸۸۶۲۰۸۵
FarmaSOS.com

TOWING

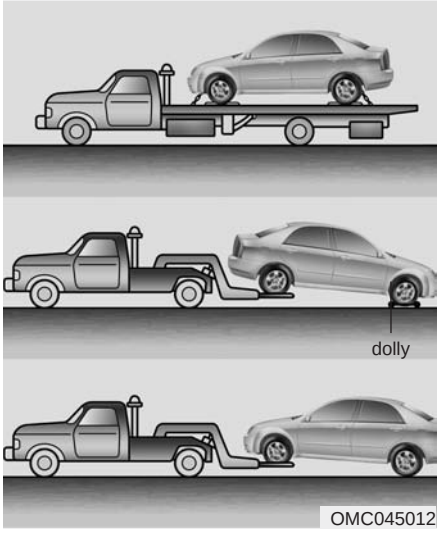

F080100ATD-EU

Towing service

If emergency towing is necessary, we recommend having it done by an authorized KIA dealer or a commercial tow-truck service. Proper lifting and towing procedures are necessary to prevent damage to the vehicle. The use of wheel dollies or flatbed is recommended.

For trailer towing guidelines information, refer to “Trailer towing” in section 5.

It is acceptable to tow the vehicle with the rear wheels on the ground (without dollies) and the front wheels off the ground.

If any of the loaded wheels or suspension components are damaged or the vehicle is being towed with the front wheels on the ground, use a towing dolly under the front wheels.

When being towed by a commercial tow truck and wheel dollies are not used, the front of the vehicle should always be lifted, not the rear.

امداد خودرو سارا
تلفن شبانه روزی: ۰۲۱-۸۸۸۶۲۰۸۵
FarmaSOS.com

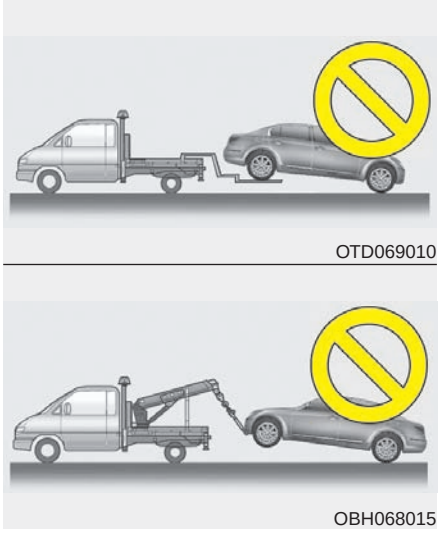

⚠ CAUTION

- ***Do not tow the vehicle backwards with the front wheels on the ground as this may cause damage to the vehicle.***
- ***Do not tow with sling-type equipment. Use wheel lift or flatbed equipment.***

When towing your vehicle in an emergency without wheel dollies :

1. Set the ignition switch in the ACC position.
2. Place the transaxle shift lever in N (Neutral).
3. Release the parking brake.

⚠ CAUTION

Failure to place the transaxle shift lever in N (Neutral) may cause internal damage to the transaxle.

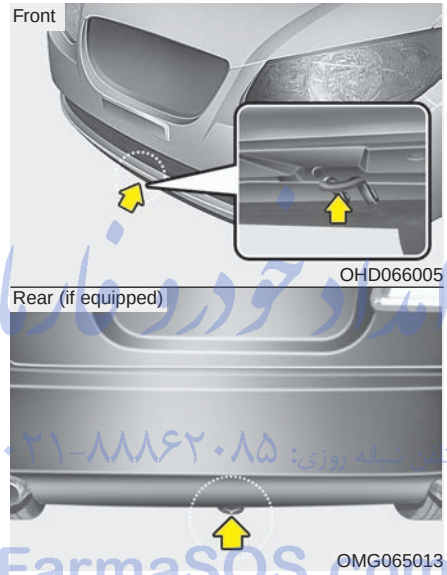

F080300ATD-EU

Emergency towing

If towing is necessary, we recommend you to have it done by an authorized KIA dealer or a commercial tow truck service.

If towing service is not available in an emergency, your vehicle may be temporarily towed using a cable or chain secured to the emergency towing hook under the front (or rear) of the vehicle. Use extreme caution when towing the vehicle. A driver must be in the vehicle to steer it and operate the brakes.

Towing in this manner may be done only on hard-surfaced roads for a short distance and at low speeds. Also, the wheels, axles, power train, steering and brakes must all be in good condition.

- Do not use the towing hooks to pull a vehicle out of mud, sand or other conditions from which the vehicle cannot be driven out under its own power.
- Avoid towing a vehicle heavier than the vehicle doing the towing.
- The drivers of both vehicles should communicate with each other frequently.

امداد خودرو فارما
تلفن شبانه روزی: ۰۲۱-۸۸۸۶۲۰۸۵
FarmaSOS.com

⚠ CAUTION

- ***Attach a towing strap to the towing hook.***
- ***Using a portion of the vehicle other than the tow hooks for towing may damage the body of your vehicle.***
- ***Use only a cable or chain specifically intended for use in towing vehicles. Securely fasten the cable or chain to the towing hook provided.***

- Before emergency towing, check that the hook is not broken or damaged.
- Fasten the towing cable or chain securely to the hook.
- Do not jerk the hook. Apply it steadily with even force.
- To avoid damaging the hook, do not pull from the side or at a vertical angle. Always pull straight ahead.

⚠ WARNING

Use extreme caution when towing the vehicle.

- **Avoid sudden starts or erratic driving maneuvers which would place excessive stress on the emergency towing hook and towing cable or chain. The hook and towing cable or chain may break and cause serious injury or damage.**
- **If the disabled vehicle cannot be moved, do not forcibly continue the towing. Contact an authorized KIA dealer or a commercial tow truck service for assistance.**
- **Tow the vehicle as straight ahead as possible.**
- **Keep away from the vehicle during towing.**

FarsiaSOS.com

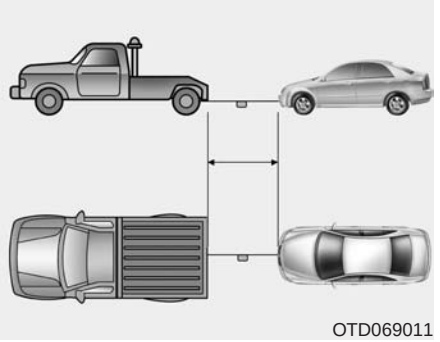
OTD069011

- Use a towing strap less than 5 m (16 feet) long. Attach a white or red cloth (about 30 cm (12 inches) wide) in the middle of the strap for easy visibility.
- Drive carefully so that the towing strap is not loosened during towing.

F080301AUN-EU

Emergency towing precautions

- Turn the ignition switch to ACC so the steering wheel isn't locked.
- Place the transaxle shift lever in N (Neutral).
- Release the parking brake.
- Press the brake pedal with more force than normal since you will have reduced brake performance.
- More steering effort will be required because the power steering system will be disabled.
- If you are driving down a long hill, the brakes may overheat and brake performance will be reduced. Stop often and let the brakes cool off.

⚠ CAUTION - Automatic transaxle

- ***If the car is being towed with all four wheels on the ground, it can be towed only from the front. Be sure that the transaxle is in neutral. Be sure the steering is unlocked by placing the ignition switch in the ACC position. A driver must be in the towed vehicle to operate the steering and brakes.***
- ***To avoid serious damage to the automatic transaxle, limit the vehicle speed to 15 km/h (10 mph) and drive less than 1.5 km (1 mile) when towing.***
- ***Before towing, check the automatic transaxle fluid leak under your vehicle. If the automatic transaxle fluid is leaking, a flatbed equipment or towing dolly must be used.***

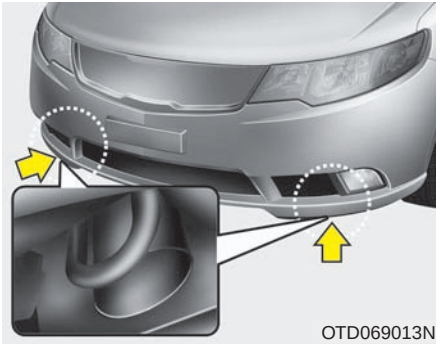

F080400ATD

Tie-down hook (for flatbed towing, if equipped)

⚠ WARNING

Do not use the tie-down hooks for towing purposes. These hooks are designed ONLY for transport tie-down. If the tie-down hooks are used for towing, the tie-down hooks or front bumper will be damaged and this could lead to serious injury.

تلفن شبانه روزی: ۰۲۱-۸۸۸۶۱۰۸۵
FarmaSOS.com

Engine compartment / 7-2
Maintenance services / 7-3
Owner maintenance / 7-4
Maintenance schedule / 7-6
Explanation of scheduled maintenance items / 7-21
Engine oil / 7-24
Engine coolant / 7-25
Brake/clutch fluid / 7-28
Power steering fluid / 7-29
Automatic transaxle fluid / 7-30
Washer fluid / 7-30
Parking brake / 7-31
Air cleaner / 7-31
Climate control air filter / 7-32
Wiper blades / 7-32
Battery / 7-34

Maintenance 7

Tires and wheels / 7-37
Fuses / 7-50
Appearance care / 7-59
Emission control system / 7-65

امداد خودرو فارما
پاسخگوی شبانه روزی: ۰۲۱-۸۸۸۶۲۰۸۵
FarmaSOS.com

ENGINE COMPARTMENT

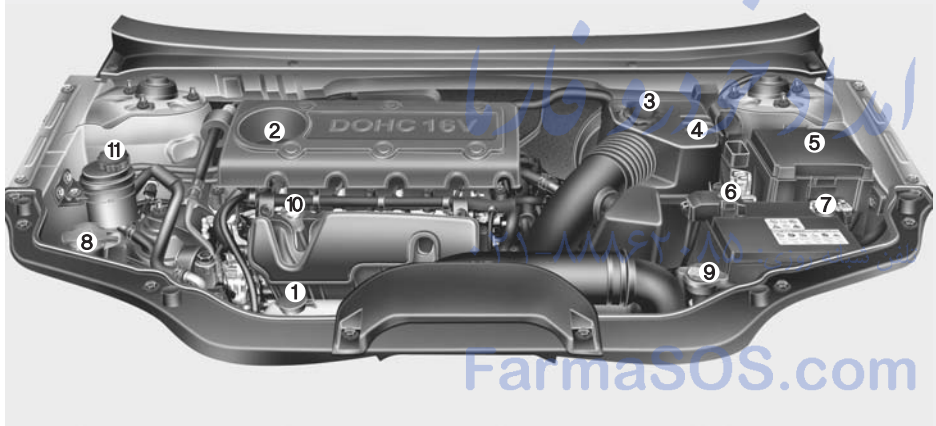

1. Engine coolant reservoir
2. Engine oil filler cap
3. Brake/clutch* fluid reservoir
4. Air cleaner
5. Fuse box
6. Positive battery terminal
7. Negative battery terminal
8. Windshield washer fluid reservoir
9. Radiator cap
10. Engine oil dipstick
11. Power steering fluid reservoir*

* : if equipped

* The actual engine room in the vehicle may differ from the illustration.

OTD071055N-1

B010000ATD

FarmaSOS.com

MAINTENANCE SERVICES

G020000AUN

You should exercise the utmost care to prevent damage to your vehicle and injury to yourself whenever performing any maintenance or inspection procedures.

Should you have any doubts concerning the inspection or servicing of your vehicle, we strongly recommend that you have an authorized KIA dealer perform this work.

An authorized KIA dealer has factory-trained technicians and genuine KIA parts to service your vehicle properly. For expert advice and quality service, see an authorized KIA dealer.

Inadequate, incomplete or insufficient servicing may result in operational problems with your vehicle that could lead to vehicle damage, an accident, or personal injury.

G020100AUN-EU

Owner’s responsibility

✻ NOTICE

Maintenance Service and Record Retention are the owner's responsibility.

You should retain documents that show proper maintenance has been performed on your vehicle in accordance with the scheduled maintenance service charts shown on the following pages. You need this information to establish your compliance with the servicing and maintenance requirements of your vehicle warranties.

Detailed warranty information is provided in your Warranty & Consumer Information manual.

Repairs and adjustments required as a result of improper maintenance or a lack of required maintenance are not covered.

We recommend you have your vehicle maintained and repaired by an authorized KIA dealer. An authorized KIA dealer meets KIA’s high service quality standards and receives technical support from KIA in order to provide you with a high level of service satisfaction.

G020200ATD

Owner maintenance precautions

Improper or incomplete service may result in problems. This section gives instructions only for the maintenance items that are easy to perform.

As explained earlier in this section, several procedures can be done only by an authorized KIA dealer with special tools.

✻ NOTICE

Improper owner maintenance during the warranty period may affect warranty coverage. For details, read the separate Warranty & Consumer Information manual provided with the vehicle. If you're unsure about any servicing or maintenance procedure, have it done by an authorized KIA dealer.

FarmaCos.com

OWNER MAINTENANCE

G030000AUN

The following lists are vehicle checks and inspections that should be performed by the owner or an authorized KIA dealer at the frequencies indicated to help ensure safe, dependable operation of your vehicle.

Any adverse conditions should be brought to the attention of your dealer as soon as possible.

These Owner Maintenance Checks are generally not covered by warranties and you may be charged for labor, parts and lubricants used.

تلفن شبانه روزی: ۰۲۱-۸۸۸۶۲۰۸۵

FarmaSOS.com

⚠ WARNING - Maintenance work

- **Performing maintenance work on a vehicle can be dangerous. You can be seriously injured while performing some maintenance procedures. If you lack sufficient knowledge and experience or the proper tools and equipment to do the work, have it done by an authorized KIA dealer.**
- **Working under the hood with the engine running is dangerous. It becomes even more dangerous when you wear jewelry or loose clothing. These can become entangled in moving parts and result in injury. Therefore, if you must run the engine while working under the hood, make certain that you remove all jewelry (especially rings, bracelets, watches, and necklaces) and all neckties, scarves, and similar loose clothing before getting near the engine or cooling fans.**

Owner maintenance schedule

G030101AHM

When you stop for fuel:

- Check the engine oil level.
- Check the coolant level in coolant reservoir.
- Check the windshield washer fluid level.
- Look for low or under-inflated tires.

⚠ WARNING

Be careful when checking your engine coolant level when the engine is hot. Scalding hot coolant and steam may blow out under pressure. This could cause burns or other serious injury.

G030102ATD

While operating your vehicle:

- Note any changes in the sound of the exhaust or any smell of exhaust fumes in the vehicle.
- Check for vibrations in the steering wheel. Notice any increased steering effort or looseness in the steering wheel, or change in its straight-ahead position.
- Notice if your vehicle constantly turns slightly or “pulls” to one side when traveling on smooth, level road.
- When stopping, listen and check for unusual sounds, pulling to one side, increased brake pedal travel or “hard-to-push” brake pedal.
- If any slipping or changes in the operation of your transaxle occurs, check the transaxle fluid level.
- Check the automatic transaxle P (Park) function.
- Check the parking brake.
- Check for fluid leaks under your vehicle (water dripping from the air conditioning system during or after use is normal).

G030103AHM

At least monthly:

- Check the coolant level in the engine coolant reservoir.
- Check the operation of all exterior lights, including the stoplights, turn signals and hazard warning flashers.
- Check the inflation pressures of all tires including the spare.

G030104AHM

At least twice a year (i.e., every Spring and Fall) :

- Check the radiator, heater and air conditioning hoses for leaks or damage.
- Check the windshield washer spray and wiper operation. Clean the wiper blades with clean cloth dampened with washer fluid.
- Check the headlight alignment.
- Check the muffler, exhaust pipes, shields and clamps.
- Check the lap/shoulder belts for wear and function.
- Check for worn tires and loose wheel lug nuts.

G030105ATD

At least once a year :

- Clean the body and door drain holes.
- Lubricate the door hinges and checks, and hood hinges.
- Lubricate the door and hood locks and latches.
- Lubricate the door rubber weather-strips.
- Check the air conditioning system.
- Check the power steering fluid level.
- Inspect and lubricate automatic transaxle linkage and controls.
- Clean the battery and terminals.
- Check the brake/clutch fluid level.

امداد خودرو فارما
تلفن پاسخ ۰۲۱-۲۸۸۰۲۹۰۰
FarmaSOS.com

SCHEDULED MAINTENANCE SERVICE

Follow Normal Maintenance Schedule if the vehicle is usually operated where none of the following conditions apply. If any of the following conditions apply, follow Maintenance Under Severe Usage Conditions.

- Repeated short distance driving.
- Driving in dusty conditions or sandy areas.
- Extensive use of brakes.
- Driving in areas where salt or other corrosive materials are being used.
- Driving on rough or muddy roads.
- Driving in mountainous areas.
- Extended periods of idling or low speed operation.
- Driving for a prolonged period in cold temperatures and/or extremely humid climates.
- More than 50% driving in heavy city traffic during hot weather above 32°C (90°F).

If your vehicle is operated under the above conditions, you should inspect, replace or refill more frequently than the following Normal Maintenance Schedule. After 120 months or 240,000 km (150,000 miles) continue to follow the prescribed maintenance intervals.

امداد خودرو فارما
تلفن شبانه روزی: ۰۲۱-۸۸۸۶۲۰۸۵
FarmaSOS.com

NORMAL MAINTENANCE SCHEDULE

The following maintenance services must be performed to ensure good emission control and performance. Keep receipts for all vehicle emission services to protect your warranty. Where both kilometrage and time are shown, the frequency of service is determined by whichever occurs first.

12,000 km (7,500 miles) or 6 months

- ❑ Rotate tires - including tire pressure and tread wear (Every 12,000 km or 12 months)
- ❑ Inspect air cleaner filter
- ❑ Inspect vacuum hose
- ❑ Replace engine oil and filter (12,000 km (7,500 miles) or 12 months)
- ❑ Inspect battery condition
- ❑ Inspect cooling system hoses and connections
- ❑ Inspect clutch (if equipped) and brake pedal free play
- ❑ Add fuel additive *3 (12,000 km (7,500 miles) or 12 months)

24,000 km (15,000 miles) or 12 months

- ❑ Rotate tires - including tire pressure and tread wear (Every 12,000 km or 12 months)
- ❑ Inspect air cleaner filter
- ❑ Inspect power steering fluid and lines (if equipped)
- ❑ Inspect power steering pump, belt and hoses (if equipped)
- ❑ Inspect vacuum hose
- ❑ Inspect air conditioning refrigerant
- ❑ Inspect brake lines, hoses and connections (including booster)
- ❑ Inspect drive shafts and boots

(Continued)

(Continued)

- ❑ Inspect exhaust pipe and muffler
- ❑ Inspect front brake disc/pads, calipers
- ❑ Inspect rear brake disc/pads
- ❑ Inspect steering gear box, linkage & boots/lower arm ball joint, upper arm ball joint
- ❑ Inspect suspension mounting bolts
- ❑ Replace climate control air filter (if equipped)
- ❑ Replace engine oil and filter (24,000 km (15,000 miles) or 24 months)
- ❑ Inspect battery condition
- ❑ Inspect cooling system hoses and connections
- ❑ Inspect clutch (if equipped) and brake pedal free play
- ❑ Inspect all latch, hinges and locks
- ❑ Add fuel additive *3 (24,000 km (15,000 miles) or 24 months)

*3 : If TOP TIER Detergent Gasoline is not available, one bottle of additive is recommended. Additives are available from your authorized KIA dealer along with information on how to use them. Do not mix other additives.

FarmaSOS.com

NORMAL MAINTENANCE SCHEDULE (CONT.)

36,000 km (22,500 miles) or 18 months

- ❑ Rotate tires - including tire pressure and tread wear (Every 12,000 km or 12 months)
- ❑ Inspect air cleaner filter
- ❑ Inspect vacuum hose
- ❑ Replace engine oil and filter (36,000 km (22,500 miles) or 36 months)
- ❑ Inspect add fuel additive (12,000 or 12 months) *3
- ❑ Inspect battery condition
- ❑ Inspect cooling system hoses and connections
- ❑ Inspect clutch (if equipped) and brake pedal free play

48,000 km (30,000 miles) or 24 months

- ❑ Rotate tires - including tire pressure and tread wear (Every 12,000 km or 12 months)
- ❑ Inspect air conditioning refrigerant
- ❑ Inspect brake fluid / clutch (if equipped) fluid
- ❑ Inspect brake lines, hoses and connections (including booster)
- ❑ Inspect drive shafts and boots
- ❑ Inspect exhaust pipe and muffler
- ❑ Inspect front brake disc/pads, calipers
- ❑ Inspect fuel filter *1
- ❑ Inspect fuel tank, cap, canister, fuel lines, fuel hoses, connections and vapor hose
- ❑ Inspect fuel tank air filter (if equipped) *1

(Continued)

(Continued)

- ❑ Inspect power steering fluid and lines (if equipped)
- ❑ Inspect power steering pump, belt and hoses (if equipped)
- ❑ Inspect rear brake disc/pads
- ❑ Inspect parking brake
- ❑ Inspect steering gear box, linkage & boots/lower arm ball joint, upper arm ball joint
- ❑ Inspect suspension mounting bolts
- ❑ Inspect vacuum hose
- ❑ Replace air cleaner filter
- ❑ Replace climate control air filter (if equipped)
- ❑ Replace engine oil and filter (48,000 km (30,000 miles) or 48 months)
- ❑ Inspect add fuel additive (12,000 or 12 months) *3
- ❑ Inspect battery condition
- ❑ Inspect cooling system hoses and connections
- ❑ Inspect clutch (if equipped) and brake pedal free play
- ❑ Inspect all latch, hinges and locks

*1 : Fuel filter & Fuel tank air filter are considered to be maintenance free but periodic inspection is recommended for this maintenance schedule depends on fuel quality. If there are some important safety matters like fuel flow restriction, surging, loss of power, hard starting problem etc, replace the fuel filter immediately regardless of maintenance schedule and consult an authorized KIA dealer for details.

*3 : If TOP TIER Detergent Gasoline is not available, one bottle of additive is recommended. Additives are available from your authorized KIA dealer along with information on how to use them. Do not mix other additives.

FarmaSOS.com

NORMAL MAINTENANCE SCHEDULE (CONT.)

60,000 km (37,500 miles) or 30 months

- ❑ Rotate tires - including tire pressure and tread wear (Every 12,000 km or 12 months)
- ❑ Inspect air cleaner filter
- ❑ Inspect vacuum hose
- ❑ Replace engine oil and filter (60,000 km (37,500 miles) or 60 months)
- ❑ Inspect add fuel additive (12,000 or 12 months) *3
- ❑ Inspect battery condition
- ❑ Inspect cooling system hoses and connections
- ❑ Inspect clutch (if equipped) and brake pedal free play
- ❑ Inspect manual transaxle fluid (if equipped) (Every 60,000 km or 48 months)

72,000 km (45,000 miles) or 36 months

- ❑ Rotate tires - including tire pressure and tread wear (Every 12,000 km or 12 months)
- ❑ Inspect air cleaner filter
- ❑ Inspect air conditioning refrigerant
- ❑ Inspect brake lines, hoses and connections (including booster)
- ❑ Inspect drive shafts and boots
- ❑ Inspect exhaust pipe and muffler
- ❑ Inspect front brake disc/pads, calipers
- ❑ Inspect power steering fluid and lines (if equipped)
- ❑ Inspect power steering pump, belt and hoses (if equipped)

(Continued)

(Continued)

- ❑ Inspect rear brake disc/pads
- ❑ Inspect steering gear box, linkage & boots/lower arm ball joint, upper arm ball joint
- ❑ Inspect suspension mounting bolts
- ❑ Inspect vacuum hose
- ❑ Replace climate control air filter (if equipped)
- ❑ Replace engine oil and filter (72,000 km (45,000 miles) or 72 months)
- ❑ Inspect add fuel additive (12,000 or 12 months) *3
- ❑ Inspect battery condition
- ❑ Inspect cooling system hoses and connections
- ❑ Inspect clutch (if equipped) and brake pedal free play
- ❑ Inspect all latch, hinges and locks

*3 : If TOP TIER Detergent Gasoline is not available, one bottle of additive is recommended. Additives are available from your authorized KIA dealer along with information on how to use them. Do not mix other additives.

امداد خودرو فارما
۰۲۱-۸۸۸۶۲۰۸۰
FarmaSOS.com

NORMAL MAINTENANCE SCHEDULE (CONT.)

84,000 km (52,500 miles) or 42 months

- ❑ Rotate tires - including tire pressure and tread wear (Every 12,000 km or 12 months)
- ❑ Inspect air cleaner filter
- ❑ Inspect vacuum hose
- ❑ Replace engine oil and filter (84,000 km (52,500 miles) or 84 months)
- ❑ Inspect add fuel additive (12,000 or 12 months) *3
- ❑ Inspect battery condition
- ❑ Inspect cooling system hoses and connections
- ❑ Inspect clutch (if equipped) and brake pedal free play

96,000 km (60,000 miles) or 48 months

- ❑ Rotate tires - including tire pressure and tread wear (Every 12,000 km or 12 months)
- ❑ Inspect vacuum hose
- ❑ Inspect air conditioning refrigerant
- ❑ Inspect brake lines, hoses and connections (including booster)
- ❑ Inspect drive shafts and boots
- ❑ Inspect exhaust pipe and muffler
- ❑ Inspect front brake disc/pads, calipers
- ❑ Inspect power steering fluid and lines (if equipped)
- ❑ Inspect power steering pump, belt and hoses (if equipped)
- ❑ Inspect rear brake disc/pads
- ❑ Inspect steering gear box, linkage & boots/lower arm ball joint, upper arm ball joint
- ❑ Inspect suspension mounting bolts
- ❑ Inspect brake fluid / clutch (if equipped) fluid
- ❑ Inspect fuel filter *1
- ❑ Inspect fuel tank, cap, canister, fuel lines, fuel hoses, connections and vapor hose

(Continued)

*1 : Fuel filter & Fuel tank air filter are considered to be maintenance free but periodic inspection is recommended for this maintenance schedule depends on fuel quality. If there are some important safety matters like fuel flow restriction, surging, loss of power, hard starting problem etc, replace the fuel filter immediately regardless of maintenance schedule and consult an authorized KIA dealer for details.

*3 : If TOP TIER Detergent Gasoline is not available, one bottle of additive is recommended. Additives are available from your authorized KIA dealer along with information on how to use them. Do not mix other additives.

امداد خودرو فارما
۰۲۱-۸۸۸۶۲۰۸۰
FarmaSOS.com

NORMAL MAINTENANCE SCHEDULE (CONT.)

(Continued)

- ❑ Inspect fuel tank air filter (if equipped) *1
- ❑ Inspect parking brake
- ❑ Inspect valve clearance *2
- ❑ Replace air cleaner filter
- ❑ Replace climate control air filter (if equipped)
- ❑ Replace engine oil and filter
  (96,000 km (60,000 miles) or 96 months)
- ❑ Inspect drive belt *4
  (First, 96,000 km or 72 months
  after every 24,000 km or 24 months)
- ❑ Inspect add fuel additive (12,000 or 12 months) *3
- ❑ Inspect battery condition
- ❑ Inspect cooling system hoses and connections
- ❑ Inspect clutch (if equipped) and brake pedal free play
- ❑ Inspect all latch, hinges and locks

*1 : Fuel filter & Fuel tank air filter are considered to be maintenance free but periodic inspection is recommended for this maintenance schedule depends on fuel quality. If there are some important safety matters like fuel flow restriction, surging, loss of power, hard starting problem etc, replace the fuel filter immediately regardless of maintenance schedule and consult an authorized KIA dealer for details.

*2 : Inspect for excessive tappet noise and/or engine vibration and adjust if necessary.

*3 : If TOP TIER Detergent Gasoline is not available, one bottle of additive is recommended. Additives are available from your authorized KIA dealer along with information on how to use them. Do not mix other additives.

*4 : The drive belt should be replaced when cracks occur or tension is reduced excessively.

امداد خودرو فارما
تلفن شبانه روزی: ۰۲۱-۸۸۸۶۲۰۸۵
FarmaSOS.com

NORMAL MAINTENANCE SCHEDULE (CONT.)

108,000 km (67,500 miles) or 54 months

- ❑ Rotate tires - including tire pressure and tread wear (Every 12,000 km or 12 months)
- ❑ Inspect air cleaner filter
- ❑ Inspect vacuum hose
- ❑ Replace engine oil and filter (108,000 km (67,500 miles) or 108 months)
- ❑ Inspect add fuel additive (12,000 or 12 months) *3
- ❑ Inspect battery condition
- ❑ Inspect cooling system hoses and connections
- ❑ Inspect clutch (if equipped) and brake pedal free play

120,000 km (75,000 miles) or 60 months

- ❑ Rotate tires - including tire pressure and tread wear (Every 12,000 km or 12 months)
- ❑ Inspect air cleaner filter
- ❑ Inspect air conditioning refrigerant
- ❑ Inspect brake lines, hoses and connections (including booster)
- ❑ Inspect drive shafts and boots
- ❑ Inspect exhaust pipe and muffler
- ❑ Inspect front brake disc/pads, calipers
- ❑ Inspect power steering fluid and lines (if equipped)
- ❑ Inspect power steering pump, belt and hoses (if equipped)
- ❑ Inspect rear brake disc/pads
- ❑ Inspect steering gear box, linkage & boots/lower arm ball joint, upper arm ball joint

(Continued)

(Continued)

- ❑ Inspect suspension mounting bolts
- ❑ Inspect vacuum hose
- ❑ Replace climate control air filter (if equipped)
- ❑ Replace engine oil and filter (120,000 km (75,000 miles) or 120 months)
- ❑ Inspect drive belt *4 (First, 96,000 km or 72 months after every 24,000 km or 24 months)
- ❑ Inspect add fuel additive (12,000 or 12 months) *3
- ❑ Inspect battery condition
- ❑ Inspect cooling system hoses and connections
- ❑ Inspect clutch (if equipped) and brake pedal free play
- ❑ Inspect manual transaxle fluid (if equipped) (Every 60,000 km or 48 months)
- ❑ Inspect all latch, hinges and locks

*3 : If TOP TIER Detergent Gasoline is not available, one bottle of additive is recommended. Additives are available from your authorized KIA dealer along with information on how to use them. Do not mix other additives.

*4 : The drive belt should be replaced when cracks occur or tension is reduced excessively.

FarmaSOS.com

NORMAL MAINTENANCE SCHEDULE (CONT.)

132,000 km (82,500 miles) or 66 months

- ❑ Rotate tires - including tire pressure and tread wear (Every 12,000 km or 12 months)
- ❑ Inspect air cleaner filter
- ❑ Inspect vacuum hose
- ❑ Replace engine oil and filter (132,000 km (82,500 miles) or 132 months)
- ❑ Inspect add fuel additive (12,000 or 12 months) *3
- ❑ Inspect battery condition
- ❑ Inspect cooling system hoses and connections
- ❑ Inspect clutch (if equipped) and brake pedal free play

144,000 km (90,000 miles) or 72 months

- ❑ Rotate tires - including tire pressure and tread wear (Every 12,000 km or 12 months)
- ❑ Inspect air conditioning refrigerant
- ❑ Inspect brake fluid / clutch (if equipped) fluid
- ❑ Inspect brake lines, hoses and connections (including booster)
- ❑ Inspect drive shafts and boots
- ❑ Inspect exhaust pipe and muffler
- ❑ Inspect front brake disc/pads, calipers
- ❑ Inspect fuel filter *1
- ❑ Inspect fuel tank, cap, canister, fuel lines, fuel hoses, connections and vapor hose
- ❑ Inspect fuel tank air filter (if equipped) *1
- ❑ Inspect power steering fluid and lines (if equipped)
- ❑ Inspect power steering pump, belt and hoses (if equipped)

(Continued)

(Continued)

- ❑ Inspect parking brake
- ❑ Inspect rear brake disc/pads
- ❑ Inspect steering gear box, linkage & boots/lower arm ball joint, upper arm ball joint
- ❑ Inspect suspension mounting bolts
- ❑ Inspect vacuum hose
- ❑ Replace climate control air filter (if equipped)
- ❑ Replace air cleaner filter
- ❑ Replace engine oil and filter (144,000 km (90,000 miles) or 144 months)
- ❑ Inspect drive belt *4 (First, 96,000 km or 72 months after every 24,000 km or 24 months)
- ❑ Inspect add fuel additive (12,000 or 12 months) *3
- ❑ Inspect battery condition
- ❑ Inspect cooling system hoses and connections
- ❑ Inspect clutch (if equipped) and brake pedal free play
- ❑ Inspect all latch, hinges and locks

*1 : Fuel filter & Fuel tank air filter are considered to be maintenance free but periodic inspection is recommended for this maintenance schedule depends on fuel quality. If there are some important safety matters like fuel flow restriction, surging, loss of power, hard starting problem etc, replace the fuel filter immediately regardless of maintenance schedule and consult an authorized KIA dealer for details.

*3 : If TOP TIER Detergent Gasoline is not available, one bottle of additive is recommended. Additives are available from your authorized KIA dealer along with information on how to use them. Do not mix other additives.

*4 : The drive belt should be replaced when cracks occur or tension is reduced excessively.

FarmaSOS.com

NORMAL MAINTENANCE SCHEDULE (CONT.)

156,000 km (97,500 miles) or 78 months

- ❑ Rotate tires - including tire pressure and tread wear (Every 12,000 km or 12 months)
- ❑ Inspect air cleaner filter
- ❑ Inspect vacuum hose
- ❑ Replace engine oil and filter (156,000 km (97,500 miles) or 156 months)
- ❑ Inspect add fuel additive (12,000 or 12 months) *3
- ❑ Inspect battery condition
- ❑ Inspect cooling system hoses and connections
- ❑ Inspect clutch (if equipped) and brake pedal free play

168,000 km (105,000 miles) or 84 months

- ❑ Rotate tires - including tire pressure and tread wear (Every 12,000 km or 12 months)
- ❑ Inspect air cleaner filter
- ❑ Inspect air conditioning refrigerant
- ❑ Inspect brake lines, hoses and connections (including booster)
- ❑ Inspect drive shafts and boots
- ❑ Inspect exhaust pipe and muffler
- ❑ Inspect front brake disc/pads, calipers
- ❑ Inspect power steering fluid and lines (if equipped)
- ❑ Inspect power steering pump, belt and hoses (if equipped)
- ❑ Inspect rear brake disc/pads
- ❑ Inspect steering gear box, linkage & boots/lower arm ball joint, upper arm ball joint

(Continued)

(Continued)

- ❑ Inspect suspension mounting bolts
- ❑ Inspect vacuum hose
- ❑ Replace climate control air filter (if equipped)
- ❑ Replace engine oil and filter (168,000 km (105,000 miles) or 168 months)
- ❑ Replace spark plugs (iridium coated)
- ❑ Inspect drive belt *4 (First, 96,000 km or 72 months after every 24,000 km or 24 months)
- ❑ Inspect add fuel additive (12,000 or 12 months) *3
- ❑ Inspect battery condition
- ❑ Inspect cooling system hoses and connections
- ❑ Inspect clutch (if equipped) and brake pedal free play
- ❑ Inspect all latch, hinges and locks

*3 : If TOP TIER Detergent Gasoline is not available, one bottle of additive is recommended. Additives are available from your authorized KIA dealer along with information on how to use them. Do not mix other additives.

*4 : The drive belt should be replaced when cracks occur or tension is reduced excessively.

امداد خودرو فارما
تلفن شبانه روزی: ۰۲۱-۸۸۸۶۲۰۸۵
FarmaSOS.com

NORMAL MAINTENANCE SCHEDULE (CONT.)

180,000 km (112,500 miles) or 90 months

- ❑ Rotate tires - including tire pressure and tread wear (Every 12,000 km or 12 months)
- ❑ Inspect air cleaner filter
- ❑ Inspect vacuum hose
- ❑ Replace engine oil and filter (180,000 km (112,500 miles) or 180 months)
- ❑ Inspect add fuel additive (12,000 or 12 months) *3
- ❑ Inspect battery condition
- ❑ Inspect cooling system hoses and connections
- ❑ Inspect clutch (if equipped) and brake pedal free play
- ❑ Inspect manual transaxle fluid (if equipped) (Every 60,000 km or 48 months)

192,000 km (120,000 miles) or 96 months

- ❑ Rotate tires - including tire pressure and tread wear (Every 12,000 km or 12 months)
- ❑ Inspect air conditioning refrigerant
- ❑ Inspect brake fluid / clutch (if equipped) fluid
- ❑ Inspect brake lines, hoses and connections (including booster)
- ❑ Inspect drive shafts and boots
- ❑ Inspect exhaust pipe and muffler
- ❑ Inspect front brake disc/pads, calipers
- ❑ Inspect fuel filter *1
- ❑ Inspect fuel tank, cap, canister, fuel lines, fuel hoses, connections and vapor hose

(Continued)

(Continued)

- ❑ Inspect fuel tank air filter (if equipped) *1
- ❑ Inspect parking brake
- ❑ Inspect power steering fluid and lines (if equipped)
- ❑ Inspect power steering pump, belt and hoses (if equipped)
- ❑ Inspect rear brake disc/pads
- ❑ Inspect steering gear box, linkage & boots/lower arm ball joint, upper arm ball joint
- ❑ Inspect suspension mounting bolts
- ❑ Inspect vacuum hose
- ❑ Inspect vapor hose and fuel filler cap
- ❑ Inspect valve clearance *2
- ❑ Replace air cleaner filter
- ❑ Replace climate control air filter (if equipped)
- ❑ Replace engine coolant *5 (First, 192,000 km (120,000 miles) or 120 months after every 48,000 km (30,000 miles) or 24 months)

(Continued)

*1 : Fuel filter & Fuel tank air filter are considered to be maintenance free but periodic inspection is recommended for this maintenance schedule depends on fuel quality. If there are some important safety matters like fuel flow restriction, surging, loss of power, hard starting problem etc, replace the fuel filter immediately regardless of maintenance schedule and consult an authorized KIA dealer for details.

*2 : Inspect for excessive tappet noise and/or engine vibration and adjust if necessary.

*3 : If TOP TIER Detergent Gasoline is not available, one bottle of additive is recommended. Additives are available from your authorized KIA dealer along with information on how to use them. Do not mix other additives.

*5 : When replacing coolant, use only a qualified coolant additive for your vehicle and never mix hard water in the coolant filled at the factory. An improper coolant mixture can result in serious malfunction or engine damage.

امداد خودرو فارما
۰۲۱-۸۸۸۶۲۰۸۵ تلفن شبانه روزی
FarmaSOS.com

NORMAL MAINTENANCE SCHEDULE (CONT.)

(Continued)

- ❑ Replace engine oil and filter
  (192,000 km (120,000 miles) or 192 months)
- ❑ Inspect drive belt *4
  (First, 96,000 km or 72 months
  after every 24,000 km or 24 months)
- ❑ Inspect add fuel additive (12,000 or 12 months) *3
- ❑ Inspect battery condition
- ❑ Inspect cooling system hoses and connections
- ❑ Inspect clutch (if equipped) and brake pedal free play
- ❑ Inspect all latch, hinges and locks

204,000 km (127,500 miles) or 102 months

- ❑ Rotate tires - including tire pressure and tread wear
  (Every 12,000 km or 12 months)
- ❑ Inspect air cleaner filter
- ❑ Inspect vacuum hose
- ❑ Replace engine oil and filter
  (204,000 km (127,500 miles) or 204 months)
- ❑ Inspect add fuel additive (12,000 or 12 months) *3
- ❑ Inspect battery condition
- ❑ Inspect cooling system hoses and connections
- ❑ Inspect clutch (if equipped) and brake pedal free play

*3 : If TOP TIER Detergent Gasoline is not available, one bottle of additive is recommended. Additives are available from your authorized KIA dealer along with information on how to use them. Do not mix other additives.

*4 : The drive belt should be replaced when cracks occur or tension is reduced excessively.

امداد خودرو فارما
۰۲۱-۸۸۸۶۲۰۸۵
FarmaSOS.com

NORMAL MAINTENANCE SCHEDULE (CONT.)

216,000 km (135,000 miles) or 108 months

- ❑ Rotate tires - including tire pressure and tread wear (Every 12,000 km or 12 months)
- ❑ Inspect air cleaner filter
- ❑ Inspect vacuum hose
- ❑ Inspect air conditioning refrigerant
- ❑ Inspect brake lines, hoses and connections (including booster)
- ❑ Inspect drive shafts and boots
- ❑ Inspect exhaust pipe and muffler
- ❑ Inspect front brake disc/pads, calipers
- ❑ Inspect power steering fluid and lines (if equipped)
- ❑ Inspect power steering pump, belt and hoses (if equipped)
- ❑ Inspect rear brake disc/pads
- ❑ Inspect steering gear box, linkage & boots/lower arm ball joint, upper arm ball joint
- ❑ Inspect suspension mounting bolts
- ❑ Replace climate control air filter (if equipped)
- ❑ Replace engine oil and filter (216,000 km (135,000 miles) or 216 months)
- ❑ Inspect drive belt *4 (First, 96,000 km or 72 months after every 24,000 km or 24 months)
- ❑ Inspect add fuel additive (12,000 or 12 months) *3
- ❑ Inspect battery condition
- ❑ Inspect cooling system hoses and connections
- ❑ Inspect clutch (if equipped) and brake pedal free play
- ❑ Inspect all latch, hinges and locks

228,000 km (142,500 miles) or 114 months

- ❑ Rotate tires - including tire pressure and tread wear (Every 12,000 km or 12 months)
- ❑ Inspect air cleaner filter
- ❑ Inspect vacuum hose
- ❑ Replace engine oil and filter (228,000 km (142,500 miles) or 228 months)
- ❑ Inspect add fuel additive (12,000 or 12 months) *3
- ❑ Inspect battery condition
- ❑ Inspect cooling system hoses and connections
- ❑ Inspect clutch (if equipped) and brake pedal free play

*3 : If TOP TIER Detergent Gasoline is not available, one bottle of additive is recommended. Additives are available from your authorized KIA dealer along with information on how to use them. Do not mix other additives.

*4 : The drive belt should be replaced when cracks occur or tension is reduced excessively.

امداد خودرو فارما
۰۲۱-۸۸۸۶۲۰۸۵
FarmaSOS.com

NORMAL MAINTENANCE SCHEDULE (CONT.)

240,000 km (150,000 miles) or 120 months

- ❑ Rotate tires - including tire pressure and tread wear (Every 12,000 km or 12 months)
- ❑ Inspect air conditioning refrigerant
- ❑ Inspect brake fluid / clutch (if equipped) fluid
- ❑ Inspect brake lines, hoses and connections (including booster)
- ❑ Inspect drive shafts and boots
- ❑ Inspect exhaust pipe and muffler
- ❑ Inspect front brake disc/pads, calipers
- ❑ Inspect fuel filter *1
- ❑ Inspect fuel tank, cap, canister, fuel lines, fuel hoses, connections and vapor hose
- ❑ Inspect fuel tank air filter (if equipped) *1
- ❑ Inspect power steering fluid and lines (if equipped)
- ❑ Inspect power steering pump, belt and hoses (if equipped)
- ❑ Inspect parking brake
- ❑ Inspect rear brake disc/pads
- ❑ Inspect steering gear box, linkage & boots/lower arm ball joint, upper arm ball joint
- ❑ Inspect suspension mounting bolts
- ❑ Inspect vacuum hose
- ❑ Replace climate control air filter (if equipped)
- ❑ Replace air cleaner filter
- ❑ Replace engine oil and filter (240,000 km (150,000 miles) or 240 months)

(Continued)

(Continued)

- ❑ Replace engine coolant *5 (First, 192,000 km (120,000 miles) or 120 months after every 48,000 km (30,000 miles) or 24 months)
- ❑ Inspect drive belt *4 (First, 96,000 km or 72 months after every 24,000 km or 24 months)
- ❑ Inspect add fuel additive (12,000 or 12 months) *3
- ❑ Inspect battery condition
- ❑ Inspect cooling system hoses and connections
- ❑ Inspect clutch (if equipped) and brake pedal free play
- ❑ Inspect manual transaxle fluid (if equipped) (Every 60,000 km or 48 months)
- ❑ Inspect all latch, hinges and locks

No check, No service required

- ❑ Automatic transaxle fluid

*1 : Fuel filter & Fuel tank air filter are considered to be maintenance free but periodic inspection is recommended for this maintenance schedule depends on fuel quality. If there are some important safety matters like fuel flow restriction, surging, loss of power, hard starting problem etc, replace the fuel filter immediately regardless of maintenance schedule and consult an authorized KIA dealer for details.

*3 : If TOP TIER Detergent Gasoline is not available, one bottle of additive is recommended. Additives are available from your authorized KIA dealer along with information on how to use them. Do not mix other additives.

*4 : The drive belt should be replaced when cracks occur or tension is reduced excessively.

*5 : When replacing coolant, use only a qualified coolant additive for your vehicle and never mix hard water in the coolant filled at the factory. An improper coolant mixture can result in serious malfunction or engine damage.

امداد خودرو فارما
۰۲۱-۸۸۸۶۲۰۸۵ تلفن شبانه روزی:
FarmaSOS.com

MAINTENANCE UNDER SEVERE USAGE CONDITIONS

The following items must be serviced more frequently on cars normally used under severe driving conditions. Refer to the chart below for the appropriate maintenance intervals.

R : Replace I : Inspect and, after inspection, clean, adjust, repair or replace if necessary

MAINTENANCE ITEM	MAINTENANCE OPERATION	MAINTENANCE INTERVALS	DRIVING CONDITION
ENGINE OIL AND FILTER	R	EVERY 6,000 km OR 6 MONTHS	A, B, C, D, E, F, G, H, I, K
AIR CLEANER FILTER	R	MORE FREQUENTLY	C, E
SPARK PLUGS	R	MORE FREQUENTLY	B, H
FRONT BRAKE DISC/PADS, CALIPERS	I	MORE FREQUENTLY	C, D, G, H
REAR BRAKE DISC/PADS	I	MORE FREQUENTLY	C, D, G, H
PARKING BRAKE	I	MORE FREQUENTLY	C, D, G, H
STEERING GEAR BOX, LINKAGE & BOOTS/ LOWER ARM BALL JOINT, UPPER ARM BSALL JOINT	I	MORE FREQUENTLY	C, D, E, F, G, H, I
DRIVE SHAFTS AND BOOTS	I	EVERY 12,000 km OR 6 MONTHS	C, D, E, F, G

امداد خودرو فارما
تلفن شبانه روزی: ۰۲۱-۸۸۸۶۲۰۸۵
FarmaSOS.com

MAINTENANCE ITEM	MAINTENANCE OPERATION	MAINTENANCE INTERVALS	DRIVING CONDITION
MANUAL TRANSAXLE FLUID*	R	EVERY 120,000 km	A, C, D, E, F, G, H, I, J
AUTOMATIC TRANSAXLE FLUID*	R	EVERY 90,000 km	A, C, D, E, F, G, H, I
CLIMATE CONTROL AIR FILTER (FOR EVAPORATOR AND BLOWER UNIT)	R	MORE FREQUENTLY	C, E

SEVERE DRIVING CONDITIONS

A - Repeatedly driving shorts distanse of less than 8 km in normal temperature or less than 16 km in freezing temperature
B - Extensive engine idling or low speed driving for long distances
C - Driving on rough, dusty, muddy, unpaved, graveled or salt-spread roads
D - Driving in areas using salt or other corrosive materials or in very cold weather
E - Driving in sandy areas
F - Driving in heavy traffic area over 32°C (90°F)
G - Driving on uphill, downhill, or mountain road
H - Towing a Trailer, or using a camper, or roof rack
I - Driving as a patrol car, taxi, other commercial use or vehicle towing
J - Driving over 170 km/h
K - Frequently driving in stop-and-go conditions

* : if equipped

FarmaSOS.com

EXPLANATION OF SCHEDULED MAINTENANCE ITEMS

G050100AHM

Engine oil and filter

The engine oil and filter should be changed at the intervals specified in the maintenance schedule. If the vehicle is being driven in severe conditions, more frequent oil and filter changes are required.

G050200AUN

Drive belts

Inspect all drive belts for evidence of cuts, cracks, excessive wear or oil saturation and replace if necessary. Drive belts should be checked periodically for proper tension and adjusted as necessary.

G050400ATD

Fuel lines, fuel hoses and connections

Check the fuel lines, fuel hoses and connections for leakage and damage. Have an authorized KIA dealer replace any damaged or leaking parts immediately.

G050600AUN

Vapor hose and fuel filler cap

The vapor hose and fuel filler cap should be inspected at those intervals specified in the maintenance schedule. Make sure that a new vapor hose or fuel filler cap is correctly replaced.

تلفن شبانه روزی: ۰۲۱-۸۸۸۶۲۰۸۵

FarmaSOS.com

G050700AUN

Vacuum crankcase ventilation hoses (if equipped)

Inspect the surface of hoses for evidence of heat and/or mechanical damage. Hard and brittle rubber, cracking, tears, cuts, abrasions, and excessive swelling indicate deterioration. Particular attention should be paid to examine those hose surfaces nearest to high heat sources, such as the exhaust manifold.

Inspect the hose routing to assure that the hoses do not come in contact with any heat source, sharp edges or moving component which might cause heat damage or mechanical wear. Inspect all hose connections, such as clamps and couplings, to make sure they are secure, and that no leaks are present. Hoses should be replaced immediately if there is any evidence of deterioration or damage.

G050800AUN

Air cleaner filter

A Genuine KIA air cleaner filter is recommended when the filter is replaced.

G050900AUN

Spark plugs

Make sure to install new spark plugs of the correct heat range.

G051000AHM

Valve clearance (if equipped)

Inspect for excessive valve noise and/or engine vibration and adjust if necessary. An authorized KIA dealer should perform the operation.

G051100AHM

Cooling system

Check the cooling system components, such as the radiator, coolant reservoir, hoses and connections for leakage and damage. Replace any damaged parts.

G051200AUN

Coolant

The coolant should be changed at the intervals specified in the maintenance schedule.

G051300AUN

Manual transaxle fluid (if equipped)

Inspect the manual transaxle fluid according to the maintenance schedule.

Automatic transaxle fluid (if equipped)

Automatic transaxle fluid should not be checked under normal usage conditions.

But in severe conditions, the fluid should be changed at an authorized KIA dealer in accordance to the scheduled maintenance at the beginning of this chapter.

ParsaSos.com

✻ NOTICE

Automatic transaxle fluid color is basically red.
As the vehicle is driven, the automatic transaxle fluid will begin to look darker. This is a normal condition and you should not judge the need to replace the fluid based upon the changed color.

⚠ CAUTION - Specified fluid

The use of a non-specified fluid could result in transaxle malfunction and failure.

Use only specified automatic transaxle fluid. (Refer to "Recommended lubricants and capacities" in section 8.)

G051500AUN

Brake hoses and lines

Visually check for proper installation, chafing, cracks, deterioration and any leakage. Replace any deteriorated or damaged parts immediately.

G051600AAM

Brake/Clutch (if equipped) fluid

Check the brake fluid level in the brake fluid reservoir. The level should be between "MIN" and "MAX" marks on the side of the reservoir. Use only hydraulic brake fluid conforming to DOT 3 or DOT 4 specification.

G051700ATD

Parking brake

Inspect the parking brake system including the parking brake lever and cables.

G051800APA

Rear brake drums and linings (if equipped)

Check the rear brake drums and linings for scoring, burning, leaking fluid, broken parts, and excessive wear.

G051900ATD

Brake pads, calipers and rotors

Check the pads for excessive wear, discs for run out and wear, and calipers for fluid leakage.

G052100AUN

Suspension mounting bolts

Check the suspension connections for looseness or damage. Retighten to the specified torque.

G052200AUN

Steering gear box, linkage & boots/lower arm ball joint

With the vehicle stopped and engine off, check for excessive free-play in the steering wheel.

Check the linkage for bends or damage. Check the dust boots and ball joints for deterioration, cracks, or damage. Replace any damaged parts.

G052400AUN

Drive shafts and boots

Check the drive shafts, boots and clamps for cracks, deterioration, or damage. Replace any damaged parts and, if necessary, repack the grease.

G052500AUN

Air conditioning refrigerant (if equipped)

Check the air conditioning lines and connections for leakage and damage.

G052300AEN

Power steering pump, belt and hoses (if equipped)

Check the power steering pump and hoses for leakage and damage. Replace any damaged or leaking parts immediately. Inspect the power steering belt (or drive belt) for evidence of cuts, cracks, excessive wear, oiliness and proper tension. Replace or adjust it if necessary.

امداد خودرو فارما
تلفن شبانه روزی: ۰۲۱-۸۸۷۹۱۰۸۸
FarmaSOS.com

ENGINE OIL

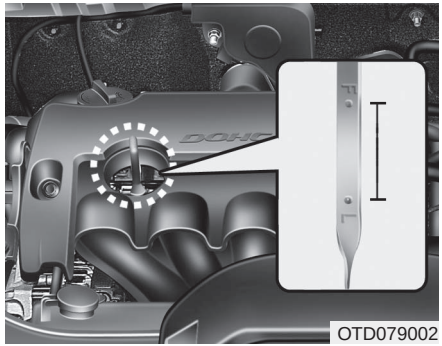

OTD079002

G060100ATD

Checking the engine oil level

1. Be sure the vehicle is on level ground.
2. Start the engine and allow it to reach normal operating temperature.
3. Turn the engine off and wait for a few minutes (about 5 minutes) for the oil to return to the oil pan.
4. Pull the dipstick out, wipe it clean, and reinsert it fully.

> **⚠ WARNING - Radiator hose**
> **Be very careful not to touch the radiator hose when checking or adding the engine oil as it may be hot enough to burn you.**

5. Pull the dipstick out again and check the level. The level should be between F and L.

تلفن شبانه روزی: ۰۲۱-۸۸۸۶۲۰۸۵
FarmaSOS.com

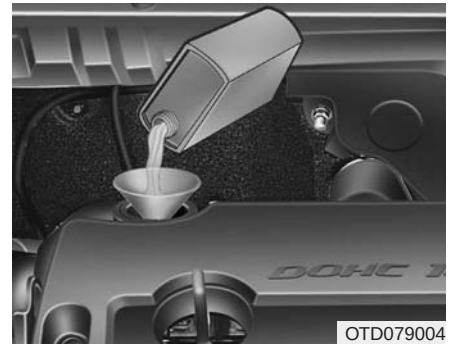
OTD079004

If it is near or at L, add enough oil to bring the level to F. **Do not overfill.**

Use a funnel to help prevent oil from being spilled on engine components.

Use only the specified engine oil. (Refer to "Recommended lubricants and capacities" in section 8.)

> **⚠ CAUTION**
> ***Do not overfill the engine oil. It may damage the engine.***

G060200AHM

Changing the engine oil and filter

Have engine oil and filter changed by an authorized KIA dealer according to the Maintenance Schedule at the beginning of this section.

⚠ WARNING

Used engine oil may cause skin irritation or cancer if left in contact with the skin for prolonged periods of time. Used engine oil contains chemicals that have caused cancer in laboratory animals. Always protect your skin by washing your hands thoroughly with soap and warm water as soon as possible after handling used oil.

ENGINE COOLANT

G070000APB

The high-pressure cooling system has a reservoir filled with year-round antifreeze coolant. The reservoir is filled at the factory.

Check the antifreeze protection and coolant level at least once a year, at the beginning of the winter season, and before traveling to a colder climate.

G070100ATD

Checking the coolant level

⚠ WARNING

Removing radiator cap

- **Never attempt to remove the radiator cap while the engine is operating or hot. Doing so might lead to cooling system and engine damage. Also, hot coolant or steam could cause serious personal injury.**

(Continued)

(Continued)

- **Turn the engine off and wait until it cools down. Use extreme care when removing the radiator cap. Wrap a thick towel around it, and turn it counterclockwise slowly to the first stop. Step back while the pressure is released from the cooling system. When you are sure all the pressure has been released, press down on the cap, using a thick towel, and continue turning counterclockwise to remove it.**
- **Even if the engine is not operating, do not remove the radiator cap or the drain plug while the engine and radiator are hot. Hot coolant and steam may still blow out under pressure, causing serious injury.**

امداد خودرو فارما
تلفن شبانه روزی: ۰۲۱-۴۸۸۶۲۰۸۵
Farma800.com

⚠ WARNING

The electric motor (cooling fan) is controlled by engine coolant temperature, refrigerant pressure and vehicle speed. It may sometimes operate even when the engine is not running. Use extreme caution when working near the blades of the cooling fan so that you are not injured by a rotating fan blades. As the engine coolant temperature decreases, the electric motor will automatically shut off. This is a normal condition.

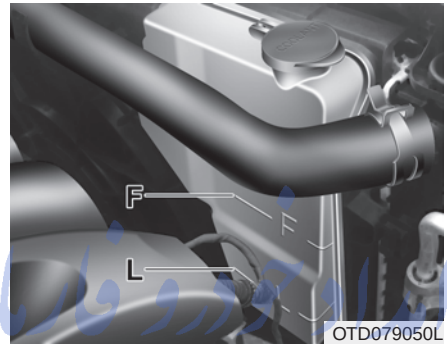

OTD079050L

Check the condition and connections of all cooling system hoses and heater hoses. Replace any swollen or deteriorated hoses.

The coolant level should be filled between F (MAX) and L (MIN) marks on the side of the coolant reservoir when the engine is cool.

If the coolant level is low, add enough specified coolant to provide protection against freezing and corrosion. Bring the level to F (MAX), but do not overfill. If frequent coolant addition is required, see an authorized KIA dealer for a cooling system inspection.

تلفن شبانه روزی: ۰۲۱-۸۸۸۶۲۰۸۵
FarmaSOS.com

G070101AHM-EU

Recommended engine coolant

- Use only soft (destilled) water in the coolant mixture.
- The engine in your vehicle has aluminum engine parts and must be protected by an ethylene-glycol-based coolant to prevent corrosion and freezing.
- DO NOT USE alcohol or methanol coolant or mix them with the specified coolant.
- Do not use a solution that contains more than 60% antifreeze or less than 35% antifreeze, which would reduce the effectiveness of the solution.

For mixture percentage, refer to the following table.

Ambient Temperature	Mixture Percentage (volume)	
	Antifreeze	Water
-15°C (5°F)	35	65
-25°C (-13°F)	40	60
-35°C (-31°F)	50	50
-45°C (-49°F)	60	40

■ Type A

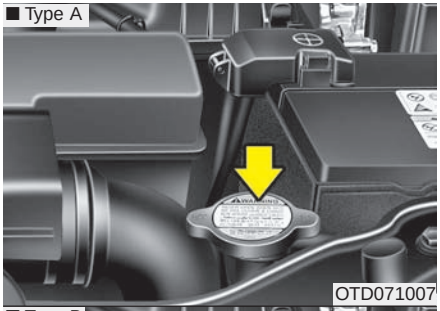

OTD071007

■ Type B

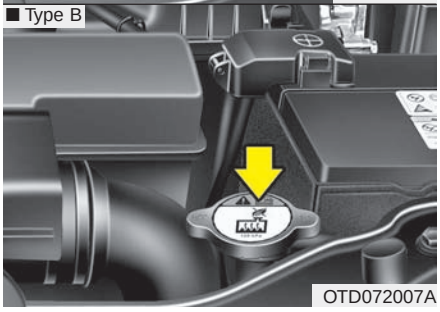

OTD072007A

⚠ WARNING

Radiator cap

Do not remove the radiator cap when the engine and radiator are hot. Scalding hot coolant and steam may blow out under pressure causing serious injury.

G070200ATD

Changing the coolant

Have the coolant changed by an authorized KIA dealer according to the Maintenance Schedule at the beginning of this section.

⚠ CAUTION

Put a thick cloth or fabric around the radiator cap before refilling the coolant in order to prevent the coolant from overflowing into engine parts such as the alternator.

⚠ WARNING - Coolant

- **Do not use radiator coolant or antifreeze in the washer fluid reservoir.**
- **Radiator coolant can severely obscure visibility when sprayed on the windshield and may cause loss of vehicle control or damage to paint and body trim.**

FarmaSOS.com

BRAKE/CLUTCH (IF EQUIPPED) FLUID

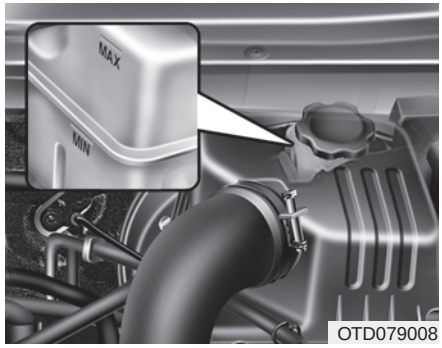

G080100AAM

Checking the brake/clutch* fluid level

Check the fluid level in the reservoir periodically. The fluid level should be between MAX and MIN marks on the side of the reservoir.

Before removing the reservoir cap and adding brake/clutch* fluid, clean the area around the reservoir cap thoroughly to prevent brake/clutch* fluid contamination.

* if equipped

If the level is low, add fluid to the MAX level. The level will fall with accumulated mileage. This is a normal condition associated with the wear of the brake linings and/or clutch disc (if equipped). If the fluid level is excessively low, have the brake/clutch* system checked by an authorized KIA dealer.

Use only the specified brake/clutch fluid. (Refer to "Recommended lubricants and capacities" in section 8.)*

Never mix different types of fluid.

⚠ WARNING - Loss of brake/clutch* fluid

In the event the brake/clutch* system requires frequent additions of fluid, the vehicle should be inspected by an authorized KIA dealer.

⚠ WARNING - Brake/clutch* fluid

When changing and adding brake/clutch* fluid, handle it carefully. Do not let it come in contact with your eyes. If brake/clutch* fluid should come in contact with your eyes, immediately flush them with a large quantity of fresh tap water. Have your eyes examined by a doctor as soon as possible.

⚠ CAUTION

Do not allow brake/clutch* fluid to contact the vehicle's body paint, as paint damage will result.

Brake/clutch* fluid, which has been exposed to open air for an extended time should never be used as its quality cannot be guaranteed. It should be disposed of properly. Don't put in the wrong kind of fluid. A few drops of mineral-based oil, such as engine oil, in your brake/clutch* system can damage brake/clutch* system parts.

POWER STEERING FLUID (IF EQUIPPED)

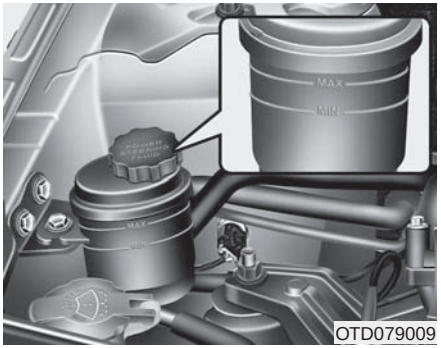

OTD079009

G090100ATD

Checking the power steering fluid level

With the vehicle on level ground, check the fluid level in the power steering reservoir periodically. The fluid should be between MAX and MIN marks on the side of the reservoir at the normal temperature.

Before adding power steering fluid, thoroughly clean the area around the reservoir cap to prevent power steering fluid contamination.

If the level is low, add fluid to the MAX level.

In the event the power steering system requires frequent addition of fluid, the vehicle should be inspected by an authorized KIA dealer.

⚠ CAUTION

- ***To avoid damage to the power steering pump, do not operate the vehicle for prolonged periods with a low power steering fluid level.***
- ***Never start the engine when the reservoir tank is empty.***
- ***When adding fluid, be careful that dirt does not get into the tank.***
- ***Too little fluid can result in increased steering effort and/or noise from the power steering system.***
- ***The use of the non-specified fluid could reduce the effectiveness of the power steering system and cause damage to it.***

Use only the specified power steering fluid. (Refer to "Recommended lubricants or capacities" in section 8.)

G090200AEN

Checking the power steering hose

Check the connections for oil leaks, damage and twists in the power steering hose before driving.

امداد خودرو فارما
تلفن و انه موزه: ۰۲۱-۸۸۸۶۱۰۸۰
FarmaSOS.com

AUTOMATIC TRANSAXLE FLUID

It is recommended that the automatic transaxle fluid should be checked by an authorized KIA dealer.

In severe conditions, the fluid should be changed at an authorized KIA dealer in accordance to the scheduled maintenance at the beginning of this chapter.

⚠ CAUTION

The use of a non-specified fluid could result in transaxle malfunction and failure.

Use only specified automatic transaxle fluid. (Refer to "Recommended lubricants and capacities" in section 8.)

WASHER FLUID

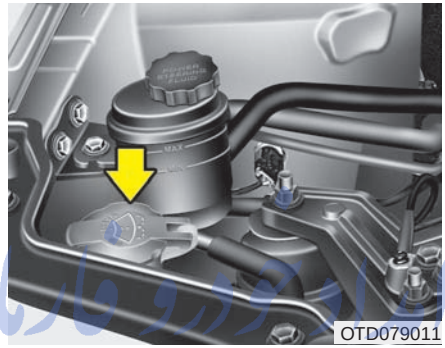

G120100AUN-U1

Checking the washer fluid level

Check the fluid level in the washer fluid reservoir and add fluid if necessary. Plain water may be used if washer fluid is not available. However, use washer solvent with antifreeze characteristics in cold climates to prevent freezing.

FarmasOS.com

⚠ WARNING - Coolant

- **Do not use radiator coolant or antifreeze in the washer fluid reservoir.**
- **Radiator coolant can severely obscure visibility when sprayed on the windshield and may cause loss of vehicle control or damage to paint and body trim.**
- **Windshield washer fluid agents contain some amounts of alcohol and can be flammable under certain circumstances. Do not allow sparks or flame to contact the washer fluid or the washer fluid reservoir. Damage to the vehicle or occupants could occur.**
- **Windshield washer fluid is poisonous to humans and animals. Do not drink and avoid contacting windshield washer fluid. Serious injury or death could occur.**

PARKING BRAKE

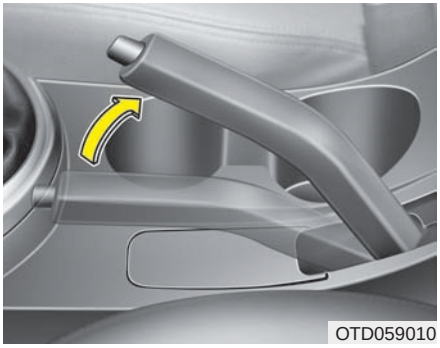

G140100ATD

Checking the parking brake

Check the stroke of the parking brake by counting the number of “clicks” heard while fully applying it from the released position. Also, the parking brake alone should securely hold the vehicle on a fairly steep grade. If the stroke is more or less than specified, have the parking brake adjusted by an authorized KIA dealer.

Stroke : 6~8 “clicks” at a force of 20 kg (44 lbs, 196 N).

AIR CLEANER

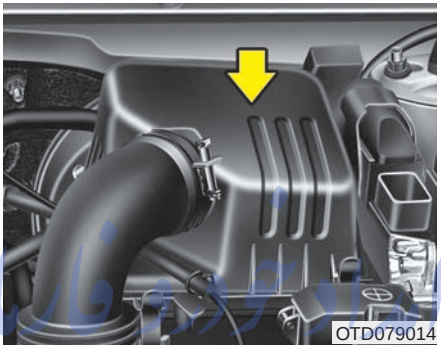

G160100AAM-EC

Filter replacement

It must be replaced when necessary, and should not be washed.

You can clean the filter when inspecting the air cleaner element.

Clean the filter by using compressed air.

تلفن شبانه روزی: ۰۲۱-۸۸۸۴۴-۸۵
FarmaSOS.com

Replace the filter according to the Maintenance Schedule.

If the vehicle is operated in extremely dusty or sandy areas, replace the element more often than the usual recommended intervals.

⚠ CAUTION

- ***Do not drive with the air cleaner removed; this will result in excessive engine wear.***
- ***When removing the air cleaner filter, be careful that dust or dirt does not enter the air intake, or damage may result.***
- ***Use a KIA genuine part. Use of nongenuine part could damage the air flow sensor.***

CLIMATE CONTROL AIR FILTER (IF EQUIPPED)

G170100AUN-EC

Filter inspection

If the vehicle is operated in severely air-polluted cities or on dusty rough roads for a long period, it should be inspected more frequently and replaced earlier. When you replace the climate control air filter, replace it performing the following procedure, and be careful to avoid damaging other components.

WIPER BLADES

G180100AUN

Blade inspection

✻ NOTICE

Commercial hot waxes applied by automatic car washes have been known to make the windshield difficult to clean.

Contamination of either the windshield or the wiper blades with foreign matter can reduce the effectiveness of the windshield wipers. Common sources of contamination are insects, tree sap, and hot wax treatments used by some commercial car washes. If the blades are not wiping properly, clean both the window and the blades with a good cleaner or mild detergent, and rinse thoroughly with clean water.

⚠ CAUTION

To prevent damage to the wiper blades, do not use gasoline, kerosene, paint thinner, or other solvents on or near them.

FarmaSOS.com

G180200AUN

Blade replacement

When the wipers no longer clean adequately, the blades may be worn or cracked, and require replacement.

⚠ CAUTION

To prevent damage to the wiper arms or other components, do not attempt to move the wipers manually.

⚠ CAUTION

The use of a non-specified wiper blade could result in wiper malfunction and failure.

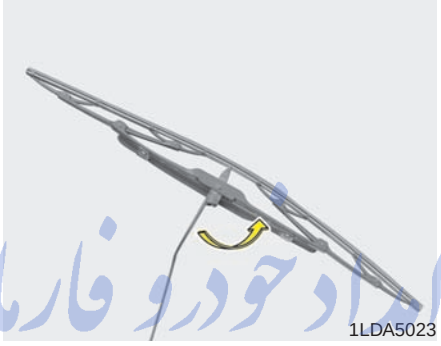

1LDA5023

G180201AUN

Front windshield wiper blade

1. Raise the wiper arm and turn the wiper blade assembly to expose the plastic locking clip.

⚠ CAUTION

Do not allow the wiper arm to fall against the windshield, since it may chip or crack the windshield.

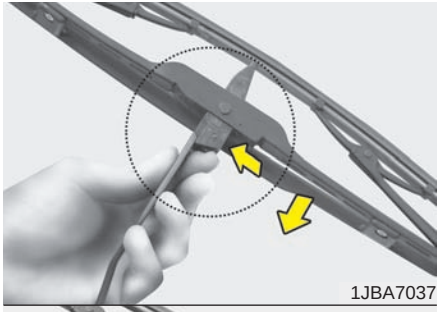

1JBA7037

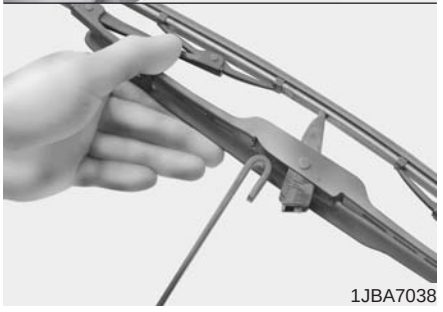

1JBA7038

2. Compress the clip and slide the blade assembly downward.
3. Lift it off the arm.
4. Install the blade assembly in the reverse order of removal.

امداد خودرو فارما
FarmaCo8.com

BATTERY

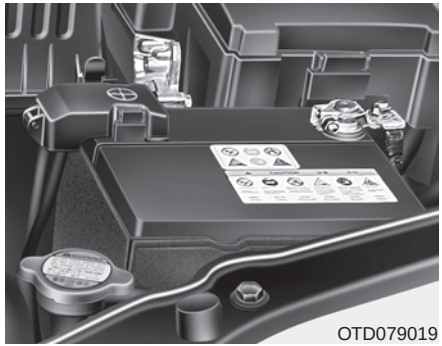

G190100ATD

For best battery service

- Keep the battery securely mounted.
- Keep the battery top clean and dry.
- Keep the terminals and connections clean, tight, and coated with petroleum jelly or terminal grease.
- Rinse any spilled electrolyte from the battery immediately with a solution of water and baking soda.
- If the vehicle is not going to be used for an extended time, disconnect the battery cables.

WARNING - Battery dangers

Always read the following instructions carefully when handling a battery.

Keep lighted cigarettes and all other flames or sparks away from the battery.

Hydrogen, a highly combustible gas, is always present in battery cells and may explode if ignited.

Keep batteries out of the reach of children because batteries contain highly corrosive SULFURIC ACID. Do not allow battery acid to contact your skin, eyes, clothing or paint finish.

(Continued)

(Continued)

If any electrolyte gets into your eyes, flush your eyes with clean water for at least 15 minutes and get immediate medical attention.

If electrolyte gets on your skin, thoroughly wash the contacted area. If you feel a pain or a burning sensation, get medical attention immediately.

Wear eye protection when charging or working near a battery. Always provide ventilation when working in an enclosed space.

An inappropriately disposed battery can be harmful to the environment and human health. Dispose the battery according to your local law(s) or regulation.

(Continued)

FarmaSOS.com

(Continued)

The battery contains lead. Do not dispose of it after use. Please return the battery to an authorized KIA dealer to be recycled.

- **When lifting a plastic-cased battery, excessive pressure on the case may cause battery acid to leak, resulting in personal injury. Lift with a battery carrier or with your hands on opposite corners.**
- **Never attempt to recharge the battery when the battery cables are connected.**
- **The electrical ignition system works with high voltage. Never touch these components with the engine running or the ignition switched on.**

Failure to follow the above warnings can result in serious bodily injury or death.

CAUTION

- ***When you don't use the vehicle for a long time in the low temperature area, separate the battery and keep it indoors.***
- ***Always charge the battery fully to prevent battery case damage in low temperature area.***
- ***If you use unauthorized electronic devices, the battery may be discharged. Never use unauthorized devices.***

WARNING

Separating the battery from the vehicle should be done in an authorized KIA dealer.

FarmaSOS.com

G190200AUN

Battery recharging

Your vehicle has a maintenance-free, calcium-based battery.

- If the battery becomes discharged in a short time (because, for example, the headlights or interior lights were left on while the vehicle was not in use), recharge it by slow charging (trickle) for 10 hours.
- If the battery gradually discharges because of high electric load while the vehicle is being used, recharge it at 20-30A for two hours.

⚠ WARNING - Recharging battery

When recharging the battery, observe the following precautions:

- **The battery must be removed from the vehicle and placed in an area with good ventilation.**
- **Do not allow cigarettes, sparks, or flame near the battery.**
- **Watch the battery during charging, and stop or reduce the charging rate if the battery cells begin gassing (boiling) violently or if the temperature of the electrolyte of any cell exceeds 49°C (120°F).**
- **Wear eye protection when checking the battery during charging.**

(Continued)

(Continued)

- **Disconnect the battery charger in the following order.**

1. **Turn off the battery charger main switch.**
2. **Unhook the negative clamp from the negative battery terminal.**
3. **Unhook the positive clamp from the positive battery terminal.**

- **Before performing maintenance or recharging the battery, turn off all accessories and stop the engine.**
- **The negative battery cable must be removed first and installed last when the battery is disconnected.**

FarmaSOS.com

G130300ATD

Reset items

Items should be reset after the battery has been discharged or the battery has been disconnected.

- Auto down window (See section 4)
- Sunroof (See section 4)
- Trip computer (See section 4)
- Climate control system (See section 4)
- Clock (See section 4)
- Audio (See section 4)

TIRES AND WHEELS

G200100AUN

Tire care

For proper maintenance, safety, and maximum fuel economy, you must always maintain recommended tire inflation pressures and stay within the load limits and weight distribution recommended for your vehicle.

G200200AUN-EU

Recommended cold tire inflation pressures

All tire pressures (including the spare) should be checked when the tires are cold. “Cold Tires” means the vehicle has not been driven for at least three hours or driven less than one mile (1.6 km).

Recommended pressures must be maintained for the best ride, top vehicle handling, and minimum tire wear.

For recommended inflation pressure refer to “Tire and wheels” in section 8.

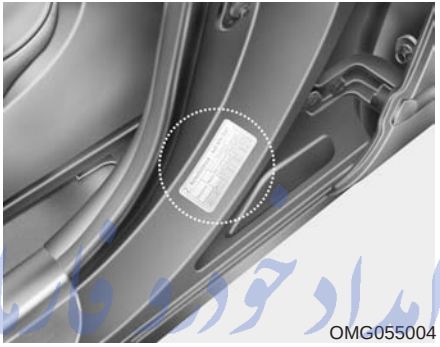
OMG055004

All specifications (sizes and pressures) can be found on a label attached to the driver’s side center pillar.

امداد خودرو فارما
تلفن شبانه روزی: ۰۹۱۲۰۸۸۸۶۲۰۸۵
FarmaSOS.com

⚠ WARNING - Tire underinflation

Severe underinflation (10 psi (70 kPa) or more) can lead to severe heat build-up, causing blowouts, tread separation and other tire failures that can result in the loss of vehicle control leading to severe injury or death. This risk is much higher on hot days and when driving for long periods at high speeds.

⚠ CAUTION

- ***Underinflation also results in excessive wear, poor handling and reduced fuel economy. Wheel deformation also is possible. Keep your tire pressures at the proper levels. If a tire frequently needs refilling, have it checked by an authorized KIA dealer.***
- ***Overinflation produces a harsh ride, excessive wear at the center of the tire tread, and a greater possibility of damage from road hazards.***

⚠ CAUTION

- ***Warm tires normally exceed recommended cold tire pressures by 28 to 41 kPa (4 to 6 psi). Do not release air from warm tires to adjust the pressure or the tires will be underinflated.***
- ***Be sure to reinstall the tire inflation valve caps. Without the valve cap, dirt or moisture could get into the valve core and cause air leakage. If a valve cap is missing, install a new one as soon as possible.***

تلفن شبانه روزی: ۰۲۱-۸۸۸۶۱۰۸۵
FarmaSOS.com

⚠ WARNING - Tire inflation

Overinflation or underinflation can reduce tire life, adversely affect vehicle handling, and lead to sudden tire failure. This could result in loss of vehicle control and potential injury.

⚠ CAUTION - Tire pressure

Always observe the following:

- ***Check tire pressure when the tires are cold. (After vehicle has been parked for at least three hours or hasn't been driven more than 1.6 km (one mile) since startup.)***
- ***Check the pressure of your spare tire each time you check the pressure of other tires.***
- ***Never overload your vehicle. Be careful not to overload a vehicle luggage rack if your vehicle is equipped with one.***
- ***Worn, old tires can cause accidents. If your tread is badly worn, or if your tires have been damaged, replace them.***

G200300AUN

Checking tire inflation pressure

Check your tires once a month or more.

Also, check the tire pressure of the spare tire.

G200301AUN-EU

How to check

Use a good quality gage to check tire pressure. You can not tell if your tires are properly inflated simply by looking at them. Radial tires may look properly inflated even when they're underinflated.

Check the tire's inflation pressure when the tires are cold. - "Cold" means your vehicle has been sitting for at least three hours or driven no more than 1.6 km (1 mile).

Remove the valve cap from the tire valve stem. Press the tire gage firmly onto the valve to get a pressure measurement. If the cold tire inflation pressure matches the recommended pressure on the tire and loading information label, no further adjustment is necessary. If the pressure is low, add air until you reach the recommended amount.

If you overfill the tire, release air by pushing on the metal stem in the center of the tire valve. Recheck the tire pressure with the tire gage. Be sure to put the valve caps back on the valve stems. They help prevent leaks by keeping out dirt and moisture.

FarmaSOS.com

⚠ WARNING

- **Inspect your tires frequently for proper inflation as well as wear and damage. Always use a tire pressure gauge.**
- **Tires with too much or too little pressure wear unevenly causing poor handling, loss of vehicle control, and sudden tire failure leading to accidents, injuries, and even death. The recommended cold tire pressure for your vehicle can be found in this manual and on the tire label located on the driver's side center pillar.**
- **Worn tires can cause accidents. Replace tires that are worn, show uneven wear, or are damaged.**
- **Remember to check the pressure of your spare tire. KIA recommends that you check the spare every time you check the pressure of the other tires on your vehicle.**

G200400AUN-EU

Tire rotation

To equalize tread wear, it is recommended that the tires be rotated every 12,000 km (7,500 miles) or sooner if irregular wear develops.

During rotation, check the tires for correct balance.

When rotating tires, check for uneven wear and damage. Abnormal wear is usually caused by incorrect tire pressure, improper wheel alignment, out-of-balance wheels, severe braking or severe cornering. Look for bumps or bulges in the tread or side of tire. Replace the tire if you find either of these conditions. Replace the tire if fabric or cord is visible. After rotation, be sure to bring the front and rear tire pressures to specification and check lug nut tightness.

Refer to “Tire and wheels” in section 8.

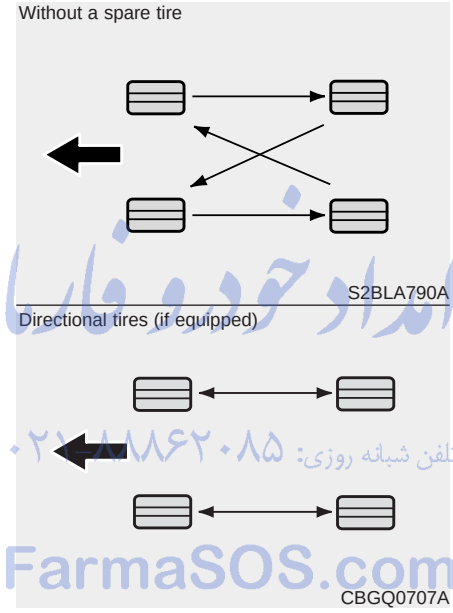

Disc brake pads should be inspected for wear whenever tires are rotated.

امداد خودرو فارس
تلفن شبانه روزی: ۰۲۱۸۸۸۶۲۰۸۵
FarmaSOS.com

✻ NOTICE

Rotate radial tires that have an asymmetric tread pattern only from front to rear and not from right to left.

⚠ WARNING

- **Do not use the compact spare tire for tire rotation.**
- **Do not mix bias ply and radial ply tires under any circumstances. This may cause unusual handling characteristics that could result in death, severe injury, or property damage.**

G200500AUN

Wheel alignment and tire balance

The wheels on your vehicle were aligned and balanced carefully at the factory to give you the longest tire life and best overall performance.

In most cases, you will not need to have your wheels aligned again. However, if you notice unusual tire wear or your vehicle pulling one way or the other, the alignment may need to be reset.

If you notice your vehicle vibrating when driving on a smooth road, your wheels may need to be rebalanced.

⚠ CAUTION

Improper wheel weights can damage your vehicle's aluminum wheels. Use only approved wheel weights.

G200600BHM-EU

Tire replacement

If the tire is worn evenly, a tread wear indicator will appear as a solid band across the tread. This shows there is less than 1.6 mm (1/16 inch) of tread left on the tire. Replace the tire when this happens.

Do not wait for the band to appear across the entire tread before replacing the tire.

⚠ WARNING - Replacing tires

To reduce the chance or serious or fatal injuries from an accident caused by tire failure or loss of vehicle control:

- **Replace tires that are worn, show uneven wear, or are damaged. Worn tires can cause loss of braking effectiveness, steering control, and traction.**
- **Do not drive your vehicle with too little or too much pressure in your tires. This can lead to uneven wear and tire failure.**
- **When replacing tires, never mix radial and bias-ply tires on the same car. You must replace all tires (including the spare) if moving from radial to bias-ply tires.**

(Continued)

FarmaSOS.com

(Continued)

- **Using tires and wheel other than the recommended sizes could cause unusual handling characteristics and poor vehicle control, resulting in a serious accident.**
- **Wheels that do not meet KIA's specifications may fit poorly and result in damage to the vehicle or unusual handling and poor vehicle control.**
- **The ABS works by comparing the speed of the wheels. Tire size can affect wheel speed. When replacing tires, all 4 tires must use the same size originally supplied with the vehicle. Using tires of a different size can cause the ABS (Anti-lock Brake System) and ESC (Electronic Stability Control) (if equipped) to work irregularly.**

G200601AUN

Compact spare tire replacement

A compact spare tire has a shorter tread life than a regular size tire. Replace it when you can see the tread wear indicator bars on the tire. The replacement compact spare tire should be the same size and design tire as the one provided with your new vehicle and should be mounted on the same compact spare tire wheel. The compact spare tire is not designed to be mounted on a regular size wheel, and the compact spare tire wheel is not designed for mounting a regular size tire.

تلفن شبانه روزی: ۰۲۱-۸۸۸۲۰۰۸۵
FarmaSOS.com

G200700BUN-EC

Wheel replacement

When replacing the metal wheels for any reason, make sure the new wheels are equivalent to the original factory units in diameter, rim width and offset.

⚠ WARNING

A wheel that is not the correct size may adversely affect wheel and bearing life, braking and stopping abilities, handling characteristics, ground clearance, body-to-tire clearance, speedometer and odometer calibration, headlight aim and bumper height.

G200800AHM

Tire traction

Tire traction can be reduced if you drive on worn tires, tires that are improperly inflated or on slippery road surfaces. Tires should be replaced when tread wear indicators appear. Slow down whenever there is rain, snow or ice on the road, to reduce the possibility of losing control of the vehicle.

G200900AUN

Tire maintenance

In addition to proper inflation, correct wheel alignment helps to decrease tire wear. If you find a tire is worn unevenly, have your dealer check the wheel alignment.

When you have new tires installed, make sure they are balanced. This will increase vehicle ride comfort and tire life. Additionally, a tire should always be rebalanced if it is removed from the wheel.

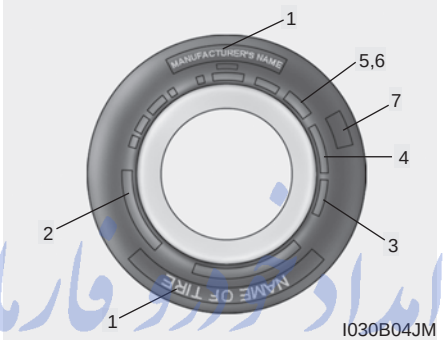

I030B04JM

G201000AUN

Tire sidewall labeling

This information identifies and describes the fundamental characteristics of the tire and also provides the tire identification number (TIN) for safety standard certification. The TIN can be used to identify the tire in case of a recall.

G201001AUN

1. Manufacturer or brand name

Manufacturer or Brand name is shown.

G201002ATD

2. Tire size designation

A tire's sidewall is marked with a tire size designation. You will need this information when selecting replacement tires for your car. The following explains what the letters and numbers in the tire size designation mean.

Example tire size designation:

(These numbers are provided as an example only; your tire size designator could vary depending on your vehicle.)

P205/55R16 89H

P - Applicable vehicle type (tires marked with the prefix "P" are intended for use on passenger vehicles or light trucks; however, not all tires have this marking).

205 - Tire width in millimeters.

55 - Aspect ratio. The tire's section height as a percentage of its width.

R - Tire construction code (Radial).

16 - Rim diameter in inches.

FarmaSOS.com

89 - Load Index, a numerical code associated with the maximum load the tire can carry.

H - Speed Rating Symbol. See the speed rating chart in this section for additional information.

Wheel size designation

Wheels are also marked with important information that you need if you ever have to replace one. The following explains what the letters and numbers in the wheel size designation mean.

Example wheel size designation:

6.0JX16

6.0 - Rim width in inches.

J - Rim contour designation.

16 - Rim diameter in inches.

Tire speed ratings

The chart below lists many of the different speed ratings currently being used for passenger vehicles. The speed rating is part of the tire size designation on the sidewall of the tire. This symbol corresponds to that tire's designed maximum safe operating speed.

Speed Rating Symbol	Maximum Speed
S	180 km/h (112 mph)
T	190 km/h (118 mph)
H	210 km/h (130 mph)
V	240 km/h (149 mph)
Z	Above 240 km/h (149 mph)

FarmaSOS.com

G201003AHM

3. Checking tire life (TIN : Tire Identification Number)

Any tires that are over 6 years old, based on the manufacturing date, (including the spare tire) should be replaced by new ones. You can find the manufacturing date on the tire sidewall (possibly on the inside of the wheel), displaying the DOT Code. The DOT Code is a series of numbers on a tire consisting of numbers and English letters. The manufacturing date is designated by the last four digits (characters) of the DOT code.

DOT : XXXX XXXX OOOO

The front part of the DOT means a plant code number, tire size and tread pattern and the last four numbers indicate week and year manufactured.

For example:

DOT XXXX XXXX 1609 represents that the tire was produced in the 16th week of 2009.

⚠ WARNING - Tire age

Tires degrade over time, even when they are not being used.

Regardless of the remaining tread, we recommend that tires be replaced after approximately six (6) years of normal service. Heat caused by hot climates or frequent high loading conditions can accelerate the aging process. Failure to follow this warning can result in sudden tire failure, which could lead to a loss of control and an accident involving serious injury or death.

G201004AEN

4. Tire ply composition and material

The number of layers or plies of rubber-coated fabric in the tire. Tire manufacturers also must indicate the materials in the tire, which include steel, nylon, polyester, and others. The letter "R" means radial ply construction; the letter "D" means diagonal or bias ply construction; and the letter "B" means belted-bias ply construction.

G201005AUN

5. Maximum permissible inflation pressure

This number is the greatest amount of air pressure that should be put in the tire. Do not exceed the maximum permissible inflation pressure. Refer to the Tire and Loading Information label for recommended inflation pressure.

امداد خودرو فارما

G201006AUN

6. Maximum load rating

This number indicates the maximum load in kilograms and pounds that can be carried by the tire. When replacing the tires on the vehicle, always use a tire that has the same load rating as the factory installed tire.

FarmaSOS.com

G201007ATD-EC

7. Uniform tire quality grading

Quality grades can be found where applicable on the tire sidewall between tread shoulder and maximum section width.

For example:

TREADWEAR 440

TRACTION A

TEMPERATURE A

Tread wear

The tread wear grade is a comparative rating based on the wear rate of the tire when tested under controlled conditions on a specified government test course. For example, a tire graded 150 would wear one-and-a-half times (1½) as well on the government course as a tire graded 100.

The relative performance of tires depends upon the actual conditions of their use, however, and may depart significantly from the norm due to variations in driving habits, service practices and differences in road characteristics and climate.

These grades are molded on the side-walls of passenger vehicle tires. The tires available as standard or optional equipment on your vehicles may vary with respect to grade.

Traction - AA, A, B & C

The traction grades, from highest to lowest, are AA, A, B and C. Those grades represent the tires ability to stop on wet pavement as measured under controlled conditions on specified government test surfaces of asphalt and concrete. A tire marked C may have poor traction performance.

⚠ WARNING

The traction grade assigned to this tire is based on straight-ahead braking traction tests, and does not include acceleration, cornering, hydroplaning, or peak traction characteristics.

Temperature -A, B & C

The temperature grades are A (the highest), B and C representing the tire's resistance to the generation of heat and its ability to dissipate heat when tested under controlled conditions on a specified indoor laboratory test wheel.

Sustained high temperature can cause the material of the tire to degenerate and reduce tire life, and excessive temperature can lead to sudden tire failure. Grades B and A represent higher levels of performance on the laboratory test wheel than the minimum required by law.

⚠ WARNING - Tire temperature

The temperature grade for this tire is established for a tire that is properly inflated and not overloaded. Excessive speed, underinflation, or excessive loading, either separately or in combination, can cause heat build-up and possible sudden tire failure. This can cause loss of vehicle control and serious injury or death.

FarmaSOS.com

G201100AAM-EC

Tire terminology and definitions

Air Pressure: The amount of air inside the tire pressing outward on the tire. Air pressure is expressed in kilopascal (kPa) or pounds per square inch (psi).

Accessory Weight: This means the combined weight of optional accessories. Some examples of optional accessories are, automatic transaxle, power seats, and air conditioning.

Aspect Ratio: The relationship of a tire's height to its width.

Belt: A rubber coated layer of cords that is located between the plies and the tread. Cords may be made from steel or other reinforcing materials.

Bead: The tire bead contains steel wires wrapped by steel cords that hold the tire onto the rim.

Bias Ply Tire: A pneumatic tire in which the plies are laid at alternate angles less than 90 degrees to the centerline of the tread.

Cold Tire Pressure: The amount of air pressure in a tire, measured in kilopascals (kPa) or pounds per square inch (psi) before a tire has built up heat from driving.

Curb Weight: This means the weight of a motor vehicle with standard and optional equipment including the maximum capacity of fuel, oil and coolant, but without passengers and cargo.

DOT Markings: The DOT code includes the Tire Identification Number (TIN), an alphanumeric designator which can also identify the tire manufacturer, production plant, brand and date of production.

GVWR: Gross Vehicle Weight Rating

GAWR FRT: Gross Axle Weight Rating for the Front Axle.

GAWR RR: Gross Axle Weight Rating for the Rear axle.

Intended Outboard Sidewall: The side of an asymmetrical tire, that must always face outward when mounted on a vehicle.

Kilopascal (kPa): The metric unit for air pressure.

Load Index: An assigned number ranging from 1 to 279 that corresponds to the load carrying capacity of a tire.

Maximum Inflation Pressure: The maximum air pressure to which a cold tire may be inflated. The maximum air pressure is molded onto the sidewall.

Maximum Load Rating: The load rating for a tire at the maximum permissible inflation pressure for that tire.

Maximum Loaded Vehicle Weight: The sum of curb weight; accessory weight; vehicle capacity weight; and production options weight.

Normal Occupant Weight: The number of occupants a vehicle is designed to seat multiplied by 68 kg (150 pounds).

Occupant Distribution: Designated seating positions.

امداد خودرو فارما
FarmaSOS.com

Outward Facing Sidewall: The side of a asymmetrical tire that has a particular side that faces outward when mounted on a vehicle. The outward facing sidewall bears white lettering or bears manufacturer, brand, and/or model name molding that is higher or deeper than the same moldings on the inner facing sidewall.

Passenger (P-Metric) Tire: A tire used on passenger cars and some light duty trucks and multipurpose vehicles.

Recommended Inflation Pressure: Vehicle manufacturer's recommended tire inflation pressure and shown on the tire placard.

Radial Ply Tire: A pneumatic tire in which the ply cords that extend to the beads are laid at 90 degrees to the centerline of the tread.

Rim: A metal support for a tire and upon which the tire beads are seated.

Sidewall: The portion of a tire between the tread and the bead.

Speed Rating: An alphanumeric code assigned to a tire indicating the maximum speed at which a tire can operate.

Traction: The friction between the tire and the road surface. The amount of grip provided.

Tread: The portion of a tire that comes into contact with the road.

Treadwear Indicators: Narrow bands, sometimes called "wear bars," that show across the tread of a tire when only 2/32 inch of tread remains.

UTQGS: Uniform Tire Quality Grading Standards, a tire information system that provides consumers with ratings for a tire's traction, temperature and treadwear. Ratings are determined by tire manufacturers using government testing procedures. The ratings are molded into the sidewall of the tire.

Vehicle Capacity Weight: The number of designated seating positions multiplied by 68 kg (150 lbs.) plus the rated cargo and luggage load.

Vehicle Maximum Load on the Tire: Load on an individual tire due to curb and accessory weight plus maximum occupant and cargo weight.

Vehicle Normal Load on the Tire: Load on an individual tire that is determined by distributing to each axle its share of the curb weight, accessory weight, and normal occupant weight and driving by 2.

Vehicle Placard: A label permanently attached to a vehicle showing the original equipment tire size and recommended inflation pressure.

ایران خودرو فارما
FarmaSOS.com

All season tires

KIA specifies all season tires on some models to provide good performance for use all year round, including snowy and icy road conditions. All season tires are identified by ALL SEASON and/or M+S (Mud and Snow) on the tire sidewall. Snow tires have better snow traction than all season tires and may be more appropriate in some areas.

Summer tires

KIA specifies summer tires on some models to provide superior performance on dry roads. Summer tire performance is substantially reduced in snow and ice. Summer tires do not have the tire traction rating M+S (Mud and Snow) on the tire side wall. if you plan to operate your vehicle in snowy or icy conditions. KIA recommends the use of snow tires or all season tires on all four wheels.

Snow tires

If you equip your car with snow tires, they should be the same size and have the same load capacity as the original tires. Snow tires should be installed on all four wheels; otherwise, poor handling may result.

Snow tires should carry 28 kPa (4 psi) more air pressure than the pressure recommended for the standard tires on the tire label on the driver's side of the center pillar, or up to the maximum pressure shown on the tire sidewall, whichever is less.

Do not drive faster than 120 km/h (75 mph) when your vehicle is equipped with snow tires.

FarmaSOS.com

Radial-ply tires

Radial-ply tires provide improved tread life, road hazard resistance and smoother high speed ride. The radial-ply tires used on this vehicle are of belted construction, and are selected to complement the ride and handling characteristics of your vehicle. Radial-ply tires have the same load carrying capacity, as bias-ply or bias belted tires of the same size, and use the same recommended inflation pressure. Mixing of radial-ply tires with bias-ply or bias belted tires is not recommended. Any combinations of radial-ply and bias-ply or bias belted tires when used on the same vehicle will seriously deteriorate vehicle handling. The best rule to follow is: Identical radial-ply tires should always be used as a set of four.

Longer wearing tires can be more susceptible to irregular tread wear. It is very important to follow the tire rotation interval shown in this section to achieve the tread life potential of these tires. Cuts and punctures in radial-ply tires are repairable only in the tread area, because of sidewall flexing. Consult your tire dealer for radial-ply tire repairs.

FUSES

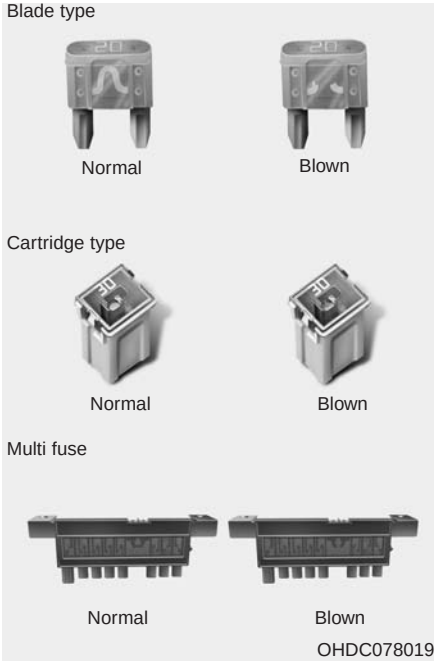

G210000ATD

A vehicle's electrical system is protected from electrical overload damage by fuses.

This vehicle has 2 fuse panels, one located in the driver's side panel bolster, the other in the engine compartment near the battery.

If any of your vehicle's lights, accessories, or controls do not work, check the appropriate circuit fuse. If a fuse has blown, the element inside the fuse will melt.

If the electrical system does not work, first check the driver's side fuse panel.

Always replace a blown fuse with one of the same rating.

If the replacement fuse blows, this indicates an electrical problem. Avoid using the system involved and immediately consult an authorized KIA dealer.

Three kinds of fuses are used: blade type for lower amperage rating, cartridge type, and multi fuse for higher amperage ratings.

FarmaSOS.com

⚠ WARNING - Fuse replacement

- **Never replace a fuse with anything but another fuse of the same rating.**
- **A higher capacity fuse could cause damage and possibly a fire.**
- **Never install a wire instead of the proper fuse - even as a temporary repair. It may cause extensive wiring damage and a possible fire.**

⚠ CAUTION

Do not use a screwdriver or any other metal object to remove fuses because it may cause a short circuit and damage the system.

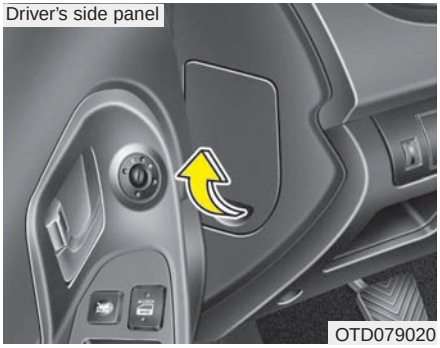

G210100ATD

Instrument panel fuse replacement

1. Turn the ignition switch and all other switches off.
2. Open the fuse panel cover.

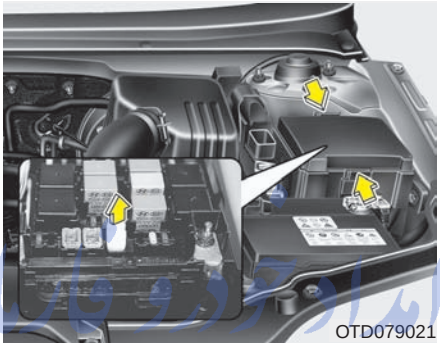

3. Pull the suspected fuse straight out. Use the removal tool provided in the engine compartment fuse panel.
4. Check the removed fuse; replace it if it is blown.
5. Push in a new fuse of the same rating, and make sure it fits tightly in the clips.

If it fits loosely, consult an authorized KIA dealer.

If you do not have a spare, use a fuse of the same rating from a circuit you may not need for operating the vehicle, such as the cigar lighter fuse.

If the headlights or other electrical components do not work and the fuses are OK, check the fuse block in the engine compartment. If a fuse is blown, it must be replaced.

PajmaSOS.com

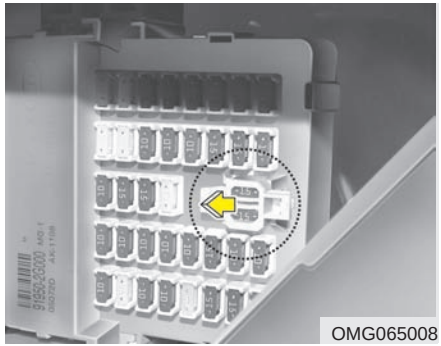

G210101AUN

Memory fuse

Your vehicle is equipped with the memory fuse to prevent battery discharge if your vehicle is parked without being operated for prolonged periods. Use the following procedures before parking the vehicle for prolonged periods.

1. Turn off the engine.
2. Turn off the headlights and tail lights.
3. Open the driver's side panel cover and pull up the memory fuse.

✻ NOTICE

- **If the memory fuse is pulled up from the fuse panel, the warning chime, audio, clock and interior lamps, etc., will not operate. Some items must be reset after replacement. Refer to "Battery" in this section.**
- **Even though the memory fuse is pulled up, the battery can still be discharged by operation of the headlights or other electrical devices.**

امداد خودرو فارما
تلفن شبانه روزی: ۰۲۱-۸۸۸۶۲۰۸۵
FarmaSOS.com

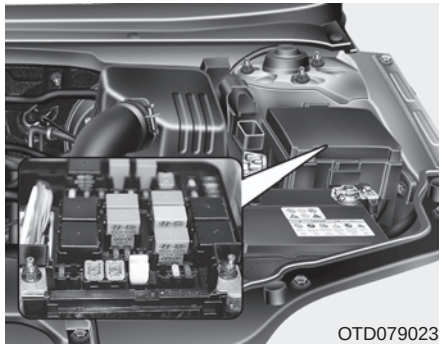

G210200APB

Engine compartment panel fuse replacement

1. Turn the ignition switch and all other switches off.
2. Remove the fuse box cover by pressing the tap and pulling up the cover.
3. Check the removed fuse; replace it if it is blown. To remove or insert the fuse, use the fuse puller in the engine compartment fuse panel.
4. Push in a new fuse of the same rating, and make sure it fits tightly in the clips. If it fits loosely, consult an authorized KIA dealer.

⚠ CAUTION

After checking the fuse panel in the engine compartment, securely install the fuse panel cover. If not, electrical failures may occur from water leaking in.

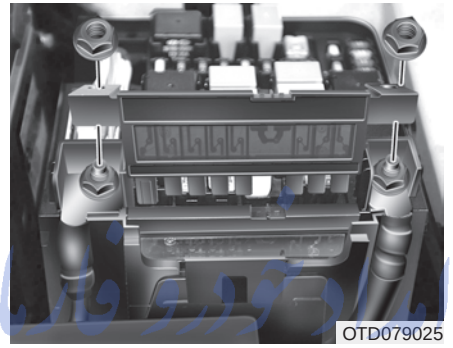

OTD079025

G210201AAM

Multi fuse

If the multi fuse is blown, it must be removed as follows:

1. Turn off the engine.
2. Disconnect the negative battery cable.
3. Remove the fuse panel on the right side in the engine compartment.
4. Remove the nuts shown in the picture above.
5. Replace the fuse with a new one of the same rating.
6. Reinstall in the reverse order of removal.

تلفن شبانه روزی: ۰۲۱-۸۸۸۶۲۰۸۵
Farma8OO.com

✻ NOTICE

If the multi fuse is blown, consult an authorized KIA dealer.

G210300ATD-EC

Fuse/Relay panel description

Inside the fuse/relay box covers, you can find the fuse/relay label describing fuse/relay name and capacity.

Instrument panel fuse panel

Engine compartment fuse panel

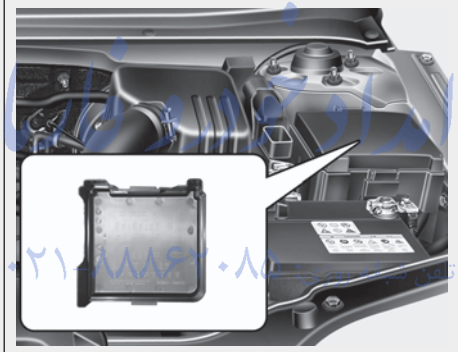

OTD079026/OTD079027

FarmaSOS.com

✻ NOTICE

Not all fuse panel descriptions in this manual may be applicable to your vehicle. It is accurate at the time of printing. When you inspect the fuse box on your vehicle, refer to the fuse box label.

Instrument panel fuse panel

Fuse		Fuse rating	Protected component
START		10A	Transaxle Range Switch (A/T), Ignition Lock Switch (M/T), E/R Fuse & Relay Box (Start Relay)
A/CON SW		10A	A/C Control Module (Auto A/C), PCM
MIRR. HTD		10A	Driver/ Passenger Power Outside Mirror (Defogger), A/C Control Module (Rear Defogger SW)
S/HTR		15A	Front Seat Warmer LH/RH
A/CON		10A	E/R Fuse & Relay Box (Blower Relay), BCM, Incar Temperature Sensor (Auto), Sunroof Control Module, A/C Control Module
HEAD LAMP		10A	E/R Fuse & Relay Box (H/LP (HI/LO) Relay), DRL Control Module
WIPER (FR)		25A	Multifunction Switch (Wiper & Washer SW), E/R Fuse & Relay Box (Wiper Relay), Front Wiper Motor
DRL		15A	DRL Control Module
FOG LP (RR)		15A	-
P/WDW DR		25A	Power Window Main Switch, Rear Power Window Switch LH
D/CLOCK		10A	Audio, BCM, Clock, Power Outside Mirror Switch
P/OUTLET		15A	Power Outlet
DR LOCK		20A	Sunroof Control Module, ICM Relay Box (Door Lock/Unlock Relay, Two Turn Unlock Relay)
DEICER		15A	ICM Relay Box (Windshield Defogger Relay)
STOP LP		15A	Stop Lamp Switch, Sport Mode Switch, Key Solenoid
POWER CONNECTOR	ROOM LP	15A	Trunk Room Lamp, BCM, Clock, Instrument Cluster (IND.), Data Link Connector, A/C Control Module, Ignition Key Ill. & Door Warning Switch, Room Lamp, Map Lamp
	AUDIO	15A	Audio

FarmaSOS.com

Fuse	Fuse rating	Protected component
TRUNK OPEN	15A	Trunk Open Relay
PDM	25A	-
SAFETY P/WDW	25A	-
P/WDW ASS	25A	Power Window Main Switch, Passenger Power Window Switch, Rear Power Window Switch RH
P/OUTLET	15A	Power Outlet
T/SIG LP	10A	Hazard Switch
A/BAG IND	10A	Instrument Cluster (IND.)
CLUSTER	10A	Instrument Cluster (IND.), BCM, Electronic Chromic Mirror, Rheostat, Steering Angle Sensor
A/BAG	15A	SRS Control Module
IGN1-A	15A	PDM, EPMESC Switch, EPS Control Module Control Module
HAZARD LP	15A	ICM Relay Box (Hazard Relay), Hazard Switch
TAIL LP (RH)	10A	Rear Combination Lamp (In/Out) RH, Head Lamp RH, Shunt Connector, Passenger Power Window Switch, License Lamp RH (4DR), Illuminations, Rheostat Relay (With DRL)
TAIL LP (LH)	10A	Head Lamp LH, Rear Combination Lamp (In/Out) LH, Power Window Main Switch, License Lamp (2DR), License Lamp LH (4DR)

FarmaSOS.com

Engine compartment fuse panel

Description		Fuse rating	Protected component
MULTI FUSE	ALT	125A	Generator, Fuse (MDPS, HTD GLASS, C/FAN, ABS 2, BLOWER, IGN 1, FOG LP (FR), ABS 1)
	MDPS	80A	EPS Control Module
	ABS 2	40A	ESC Control Module, ABS Control Module
	C/FAN	40A	C/Fan LO/HI Relay
	BLOWER	40A	Blower Relay
	HTD GLASS	40A	I/P Junction Box (Rear Defogger Relay)
	IGN 2	30A	Ignition Switch, Start Relay, Button Relay Box (ESCL Relay)
	BATT 1	50A	I/P Junction Box (Fuse (TAIL LAMP (LH/RH), P/WDW DR, P/WDW ASS, FOG LP (RR)/SSB, SMK, PDM), Tail Lamp Relay, Power Window Relay)
FUSE	ABS 1	40A	ESC Control Module, ABS Control Module
	IGN 1	30A	Ignition Switch, Button Relay Box (ESCL Relay (IGN1))
	BATT 2	50A	I/P Junction Box (Power Connector (AUDIO, ROOM LP LAMP), FUSE (STOP LP, DEICER, HAZARD LP, DR LOCK, TRUNK OPEN))
	ECU	30A	Engine Control Relay
	FOG LP (FR)	10A	Multipurpose Check Connector, Front Fog Relay, Battery Sensor
	H/LP HI	20A	H/LP (HI) Relay,
	HORN	10A	Horn Relay
	H/LP LO(LH)	10A	Head Lamp LH
	H/LP LO(RH)	10A	Head Lamp RH
	SPARE	10A	-
	SNSR 3	10A	ECM, PCM, Vehicle Speed Sensor, Pulse Generator 'A', Stop Lamp Switch
	ABS	10A	Multipurpose Check Connector, ESC Control Module, ABS Control Module
	ECU 3	15A	Ignition Coil (#1~#4), Condenser, PCM

تلفن شبانه روزی: ۰۹۳۸۱۰۲۸۵۵
FarhaSOS.com

Description		Fuse rating	Protected component
FUSE	B/UP LP	10A	Inhibitor Switch, Pulse Generater 'B', Back Up Lamp Switch
	SPARE	15A	-
	SPARE	20A	-
	IGN COIL	20A	Condenser (G4KF), Ignition Coil #1~4
	SNSR 2	10A	Oil Control Valve (#1, #2), Camshaft Position Sensor (Intake, Exhaust), F/PUMP Relay, C/FAN LO Relay, Immobilizer Module
	ECU 2	10A	PCM, Purge Control Solenoid Valve, Oxygen Sensor (Down)
	INJECTOR	10A	A/CON Relay, Crankshaft Position Sensor, Oxygen Sensor (UP), Injector #1~4, Variable Intake Sensor
	SNSR 1	15A	PCM, Canister Close Valve
	ECU 1	10A	PCM
	A/CON	10A	A/CON Relay
	F/PUMP	15A	F/FUMP Relay

امداد خودرو
تلفن شبانه روزی: ۰۲۱-۸۸۸۶۲۰۸۵
FarmaSOS.com

APPEARANCE CARE

Exterior care

G230101AUN

Exterior general caution

It is very important to follow the label directions when using any chemical cleaner or polish. Read all warning and caution statements that appear on the label.

G230102BUN

Finish maintenance

Washing

To help protect your vehicle's finish from rust and deterioration, wash it thoroughly and frequently at least once a month with lukewarm or cold water.

If you use your vehicle for off-road driving, you should wash it after each off-road trip. Pay special attention to the removal of any accumulation of salt, dirt, mud, and other foreign materials. Make sure the drain holes in the lower edges of the doors and rocker panels are kept clear and clean.

Insects, tar, tree sap, bird droppings, industrial pollution and similar deposits can damage your vehicle's finish if not removed immediately.

Even prompt washing with plain water may not completely remove all these deposits. A mild soap, safe for use on painted surfaces, may be used.

After washing, rinse the vehicle thoroughly with lukewarm or cold water. Do not allow soap to dry on the finish.

⚠ CAUTION

- ***Do not use strong soap, chemical detergents or hot water, and do not wash the vehicle in direct sunlight or when the body of the vehicle is warm.***
- ***Be careful when washing the side windows of your vehicle.***

  Especially, with high-pressure water, water may leak through the windows and wet the interior.
- ***To prevent damage to the plastic parts and lamps, do not clean with chemical solvents or strong detergents.***

⚠ WARNING - Wet brakes

After washing the vehicle, test the brakes while driving slowly to see if they have been affected by water. If braking performance is impaired, dry the brakes by applying them lightly while maintaining a slow forward speed.

FarmaSOS.com

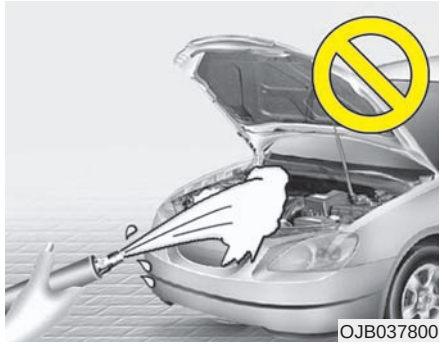
OJB037800

⚠ **CAUTION**

- ***Water washing in the engine compartment including high pressure water washing may cause the failure of electrical circuits located in the engine compartment.***
- ***Never allow water or other liquids to come in contact with electrical/electronic components inside the vehicle as this may damage them.***

Waxing

Wax the vehicle when water will no longer bead on the paint.

Always wash and dry the vehicle before waxing. Use a good quality liquid or paste wax, and follow the manufacturer's instructions. Wax all metal trim to protect it and to maintain its luster.

Removing oil, tar, and similar materials with a spot remover will usually strip the wax from the finish. Be sure to re-wax these areas even if the rest of the vehicle does not yet need waxing.

⚠ **CAUTION**

- ***Wiping dust or dirt off the body with a dry cloth will scratch the finish.***
- ***Do not use steel wool, abrasive cleaners, or strong detergents containing highly alkaline or caustic agents on chrome-plated or anodized aluminum parts. This may result in damage to the protective coating and cause discoloration or paint deterioration.***

G230103AUN

Finish damage repair

Deep scratches or stone chips in the painted surface must be repaired promptly. Exposed metal will quickly rust and may develop into a major repair expense.

✻ **NOTICE**

If your vehicle is damaged and requires any metal repair or replacement, be sure the body shop applies anti-corrosion materials to the parts repaired or replaced.

B230104AUN

Bright-metal maintenance

- To remove road tar and insects, use a tar remover, not a scraper or other sharp object.
- To protect the surfaces of bright-metal parts from corrosion, apply a coating of wax or chrome preservative and rub to a high luster.
- During winter weather or in coastal areas, cover the bright metal parts with a heavier coating of wax or preservative. If necessary, coat the parts with non-corrosive petroleum jelly or other protective compound.

G230105ASA

Underbody maintenance

Corrosive materials used for ice and snow removal and dust control may collect on the underbody. If these materials are not removed, accelerated rusting can occur on underbody parts such as the fuel lines, frame, floor pan and exhaust system, even though they have been treated with rust protection.

Thoroughly flush the vehicle underbody and wheel openings with lukewarm or cold water once a month, after off-road driving and at the end of each winter. Pay special attention to these areas because it is difficult to see all the mud and dirt. It will do more harm than good to wet down the road grime without removing it. The lower edges of the doors, rocker panels, and frame members have drain holes that should not be allowed to clog with dirt; trapped water in these areas can cause rusting.

ParmaGOS.com

⚠ WARNING

After washing the vehicle, test the brakes while driving slowly to see if they have been affected by water. If braking performance is impaired, dry the brakes by applying them lightly while maintaining a slow forward speed.

G230106AAM

Aluminum wheel maintenance

The aluminum wheels are coated with a clear protective finish.

- Do not use any abrasive cleaner, polishing compound, solvent, or wire brushes on aluminum wheels. They may scratch or damage the finish.
- Use only a mild soap or neutral detergent, and rinse thoroughly with water. Also, be sure to clean the wheels after driving on salted roads. This helps prevent corrosion.
- Avoid washing the wheels with high-speed car wash brushes.
- Do not use any cleaners containing acid or acid detergents. It may damage and corrode the aluminum wheels coated with a clear protective finish.

G230107AHM

Corrosion protection

Protecting your vehicle from corrosion

By using the most advanced design and construction practices to combat corrosion, we produces vehicles of the highest quality. However, this is only part of the job. To achieve the long-term corrosion resistance your vehicle can deliver, the owner's cooperation and assistance is also required.

Common causes of corrosion

The most common causes of corrosion on your vehicle are:

- Road salt, dirt and moisture that is allowed to accumulate underneath the vehicle.
- Removal of paint or protective coatings by stones, gravel, abrasion or minor scrapes and dents which leave unprotected metal exposed to corrosion.

High-corrosion areas

If you live in an area where your vehicle is regularly exposed to corrosive materials, corrosion protection is particularly important. Some of the common causes of accelerated corrosion are road salts, dust control chemicals, ocean air and industrial pollution.

Moisture breeds corrosion

Moisture creates the conditions in which corrosion is most likely to occur. For example, corrosion is accelerated by high humidity, particularly when temperatures are just above freezing. In such conditions, the corrosive material is kept in contact with the vehicle surfaces by moisture that evaporate slowy.

Mud is particularly corrosive because it dries slowly and holds moisture in contact with the vehicle. Although the mud appears to be dry, it can still retain the moisture and promote corrosion.

High temperatures can also accelerate corrosion of parts that are not properly ventilated so the moisture can be dispersed. For all these reasons, it is particularly important to keep your vehicle clean and free of mud or accumulations of other materials. This applies not only to the visible surfaces but particularly to the underside of the vehicle.

امداد خودرو فارما
Farma903.com

To help prevent corrosion

You can help prevent corrosion from getting started by observing the following:

Keep your vehicle clean

The best way to prevent corrosion is to keep your vehicle clean and free of corrosive materials. Attention to the underside of the vehicle is particularly important.

- If you live in a high-corrosion area — where road salts are used, near the ocean, areas with industrial pollution, acid rain, etc.—, you should take extra care to prevent corrosion. In winter, hose off the underside of your vehicle at least once a month and be sure to clean the underside thoroughly when winter is over.
- When cleaning underneath the vehicle, give particular attention to the components under the fenders and other areas that are hidden from view. Do a thorough job; just dampening the accumulated mud rather than washing it away will accelerate corrosion rather than prevent it. Water under high pressure and steam are particularly effective in removing accumulated mud and corrosive materials.
- When cleaning lower door panels, rocker panels and frame members, be sure that drain holes are kept open so that moisture can escape and not be trapped inside to accelerate corrosion.

تلفن شبانه روزی: ۰۲۱-۸۸۸۶۲۰۸۵

Keep your garage dry

Don't park your vehicle in a damp, poorly ventilated garage. This creates a favorable environment for corrosion. This is particularly true if you wash your vehicle in the garage or drive it into the garage when it is still wet or covered with snow, ice or mud. Even a heated garage can contribute to corrosion unless it is well ventilated so moisture is dispersed.

Keep paint and trim in good condition

Scratches or chips in the finish should be covered with "touch-up" paint as soon as possible to reduce the possibility of corrosion. If bare metal is showing through, the attention of a qualified body and paint shop is recommended.

Bird droppings : Bird droppings are highly corrosive and may damage painted surfaces in just a few hours. Always remove bird droppings as soon as possible.

Don't neglect the interior

Moisture can collect under the floor mats and carpeting and cause corrosion. Check under the mats periodically to be sure the carpeting is dry. Use particular care if you carry fertilizers, cleaning materials or chemicals in the car.

These should be carried only in proper containers and any spills or leaks should be cleaned up, flushed with clean water and thoroughly dried.

Interior care

G230201AHM

Interior general precautions

Prevent caustic solutions such as perfume and cosmetic oil from contacting the dashboard because they may cause damage or discoloration. If they do contact the dashboard, wipe them off immediately. See the instructions for the proper way to clean vinyl.

⚠ CAUTION

Never allow water or other liquids to come in contact with electrical/electronic components inside the vehicle as this may damage them.

⚠ CAUTION

When cleaning leather products (steering wheel, seats etc.), use neutral detergents or low alcohol content solutions. If you use high alcohol content solutions or acid/alkaline detergents, the color of the leather may fade or the surface may get stripped off.

G230202AUN

Cleaning the upholstery and interior trim

Vinyl

Remove dust and loose dirt from vinyl with a whisk broom or vacuum cleaner. Clean vinyl surfaces with a vinyl cleaner.

Fabric

Remove dust and loose dirt from fabric with a whisk broom or vacuum cleaner. Clean with a mild soap solution recommended for upholstery or carpets. Remove fresh spots immediately with a fabric spot cleaner. If fresh spots do not receive immediate attention, the fabric can be stained and its color can be affected. Also, its fire-resistant properties can be reduced if the material is not properly maintained.

FarmaSOS.com

⚠ CAUTION

Using anything but recommended cleaners and procedures may affect the fabric's appearance and fire-resistant properties.

G230203AUN

Cleaning the lap/shoulder belt webbing

Clean the belt webbing with any mild soap solution recommended for cleaning upholstery or carpet. Follow the instructions provided with the soap. Do not bleach or re-dye the webbing because this may weaken it.

G230204AHM

Cleaning the interior window glass

If the interior glass surfaces of the vehicle become fogged (that is, covered with an oily, greasy or waxy film), they should be cleaned with a glass cleaner. Follow the directions on the glass cleaner container.

⚠ CAUTION

Do not scrape or scratch the inside of the rear window. This may result in damage to the rear window defroster grid.

EMISSION CONTROL SYSTEM

G270000AHM-EU

The emission control system of your vehicle is covered by a written limited warranty. Please see the warranty information contained in the Warranty & Maintenance booklet in your vehicle.

Your vehicle is equipped with an emission control system to meet all applicable emission regulations.

There are three emission control systems, as follows.

(1) Crankcase emission control system
(2) Evaporative emission control system
(3) Exhaust emission control system

In order to assure the proper function of the emission control systems, it is recommended that you have your vehicle inspected and maintained by an authorized KIA dealer in accordance with the maintenance schedule in this manual.

Caution for the Inspection and Maintenance Test (With Electronic Stability Control (ESC) system)

- **To prevent the vehicle from misfiring during dynamometer testing, turn the Electronic Stability Control (ESC) system off by pressing the ESC switch.**
- **After dynamometer testing is completed, turn the ESC system back on by pressing the ESC switch again.**

امداد خودرو فارما
تلفن شبانه روزی: ۰۲۱-۸۸۸۶۲۰۸۵
FarmaSOS.com

G270100AUN

1. Crankcase emission control system

The positive crankcase ventilation system is employed to prevent air pollution caused by blow-by gases being emitted from the crankcase. This system supplies fresh filtered air to the crankcase through the air intake hose. Inside the crankcase, the fresh air mixes with blow-by gases, which then pass through the PCV valve into the induction system.

G270200AUN

2. Evaporative emission control (including ORVR: Onboard Refueling Vapor Recovery) system

The Evaporative Emission Control System is designed to prevent fuel vapors from escaping into the atmosphere.

(The ORVR system is designed to allow the vapors from the fuel tank to be loaded into a canister while refueling at the gas station, preventing the escape of fuel vapors into the atmosphere.)

G270201AUN

Canister

Fuel vapors generated inside the fuel tank are absorbed and stored in the onboard canister. When the engine is running, the fuel vapors absorbed in the canister are drawn into the surge tank through the purge control solenoid valve.

G270202AHM

Purge Control Solenoid Valve (PCSV)

The purge control solenoid valve is controlled by the Engine Control Module (ECM); when the engine coolant temperature is low during idling, the PCSV closes so that evaporated fuel is not taken into the engine. After the engine warms up during ordinary driving, the PCSV opens to introduce evaporated fuel to the engine.

G270300AUN

3. Exhaust emission control system

The Exhaust Emission Control System is a highly effective system which controls exhaust emissions while maintaining good vehicle performance.

G270301AUN

Vehicle modifications

This vehicle should not be modified. Modification of your vehicle could affect its performance, safety or durability and may even violate governmental safety and emissions regulations.

In addition, damage or performance problems resulting from any modification may not be covered under warranty.

FarmaSOS.com

G270302AUN

Engine exhaust gas precautions (carbon monoxide)

- Carbon monoxide can be present with other exhaust fumes. Therefore, if you smell exhaust fumes of any kind inside your vehicle, have it inspected and repaired immediately. If you ever suspect exhaust fumes are coming into your vehicle, drive it only with all the windows fully open. Have your vehicle checked and repaired immediately.

⚠ WARNING - Exhaust

Engine exhaust gases contain carbon monoxide (CO). Though colorless and odorless, it is dangerous and could be lethal if inhaled. Follow the instructions on this page to avoid CO poisoning.

- Do not operate the engine in confined or closed areas (such as garages) any more than what is necessary to move the vehicle in or out of the area.
- When the vehicle is stopped in an open area for more than a short time with the engine running, adjust the ventilation system (as needed) to draw outside air into the vehicle.
- Never sit in a parked or stopped vehicle for any extended time with the engine running.
- When the engine stalls or fails to start, excessive attempts to restart the engine may cause damage to the emission control system.

G270303AAM

Operating precautions for catalytic converters (if equipped)

⚠ WARNING - Fire

A hot exhaust system can ignite flammable items under your vehicle. Do not park, idle or drive the vehicle over or near flammable objects, such as grass, vegetation, paper, leaves, etc.

Your vehicle is equipped with a catalytic converter emission control device.

Therefore, the following precautions must be observed:

- Use only UNLEADED FUEL for gasoline engines.
- Do not operate the vehicle when there are signs of engine malfunction, such as misfire or a noticeable loss of performance.
- Do not misuse or abuse the engine. Examples of misuse are coasting with the ignition off and descending steep grades in gear with the ignition off.
- Do not operate the engine at high idle speed for extended periods (5 minutes or more).
- Do not modify or tamper with any part of the engine or emission control system. All inspections and adjustments must be made by an authorized KIA dealer.
- Avoid driving with a extremely low fuel level. Running out of fuel could cause the engine to misfire, damaging the catalytic converter.

Failure to observe these precautions could result in damage to the catalytic converter and to your vehicle. Additionally, such actions could void your warranties.

امداد خودرو فارس
تلفن شبانه روزی: ۰۲۱-۸۸۸۶۲۰۸۵
FarmaSOS.com

Dimensions / 8-2
Bulb wattage / 8-2
Tires and wheels / 8-3
Recommended lubricants and capacities / 8-4
Vehicle identification number (VIN) / 8-6
Vehicle certification label / 8-6
Tire specification and pressure label / 8-7
Engine number / 8-7

امداد خودرو فارما
تلفن شبانه روزی: ۰۲۱-۸۸۸۶۲۰۸۵
FarmaSOS.com

Specifications & Consumer information 8

DIMENSIONS

I010000ATD-EU

■ 4door vehicle / 5door vehicle

Item		in. (mm)
Overall length	4door	4530 (178.3)
	5door	4340 (170.9)
Overall width		69.8 (1775)
Overall height		57.4 (1460)
Front tread		61.3/60.7*1/60.6*2 (1557/1543/1539)
Rear tread		61.6/61.0*1/60.9*2 (1564/1550/1546)
Wheelbase		104.3 (2650)

*1 : P205/55R16 tire
*2 : P215/45R17 tire

■ 2door vehicle

Item	mm (in.)
Overall length	4480 (176.3)
Overall width	1765 (69.4)
Overall height	1400 (55.1)
Front tread	1560/1546*1/1542*2 (61.4/60.9/60.7)
Rear tread	1564/1550*1/1546*2 (61.6/61.0/60.9)
Wheelbase	2650 (104.3)

*1 : P205/55R16 tire
*2 : P215/45R17 tire

BULB WATTAGE

I030000ATD-EU

Light Bulb	Wattage
Headlights (Low)	55
Headlights (High)	55
Front turn signal	28
Front side marker	8
Position light	8
Side repeater light*	LED
Front fog light*	28
Stop and tail light	28/8 or LED
Rear turn signal light	27
Back-up light	16
Rear side marker	8
High mounted stop light	16 or LED
License plate light	5
Front map lamp*	10
Center room lamp	10
Trunk room lamp*	5

* : If equipped
*1 : for 2door vehicle only

۰۲۱-۸۸۸۶۲۰۸۵
FarmaSOS.com

TIRES AND WHEELS

I020000ATD-EU

Item		Tire size	Wheel size	Cold tire inflation pressure kPa (psi)				Wheel lug nut torque kg·m (lb·ft, N·m)
				Normal speed/load*1		High speed*2/ Maximum load		
				Front	Rear	Front	Rear	
	Full size tire	P195/65R15	5.5J×15	220 (32)	220 (32)	220 (32)	220 (32)	9~11 (65~79, 88~107)
		P205/55R16	6.0J×16					
Compact spare tire (if equipped)		T125/80D15	4.0T×15	420 (60)	420 (60)	420 (60)	420 (60)	
	Full size tire	P215/45R17	7.0J×17	220 (32)	220 (32)	220 (32)	220 (32)	
Compact spare tire (if equipped)		T125/80D16	4.0T×16	420 (60)	420 (60)	420 (60)	420 (60)	

*1 Normal load : Up to 3 persons
*2 High speed : above 160 km/h (100 mph)

امداد خودرو فارما
۰۲۱-۸۸۸۴۲۰۸۵ تلفن رایانه روزی
FarmaSOS.com

⚠ CAUTION

When replacing tires, use the same size originally supplied with the vehicle.

Using tires of a different size can damage the related parts or make it work irregularly.

RECOMMENDED LUBRICANTS AND CAPACITIES

I040000ATD-EC

To help achieve proper engine and powertrain performance and durability, use only lubricants of the proper quality. The correct lubricants also help promote engine efficiency that results in improved fuel economy.

These lubricants and fluids are recommended for use in your vehicle.

Lubricant		Volume	Classification
Engine oil *1 *2 (drain and refill, with oil filter) Recommends TOTAL QUARTZ	2.0 Engine	3.9*l* (4.1 US qt.)	API Service SM*3, ILSAC GF-4 or above
	2.4 Engine	4.3*l* (4.5 US qt.)	
Manual transaxle fluid	2.0 Engine	1.9*l* (2.0 US qt.)	API GL-4 (SAE 75W-85, fill for life)
	2.4 Engine	1.8*l* (1.9 US qt.)	
Automatic transaxle fluid	2.0 Engine	6.6*l* (6.9 US qt.)	MICHANG ATF SP-IV SK ATF SP-IV NOCA ATF SP-IV KIA genuine ATF SP-IV
	2.4 Engine	7.6*l* (8.0 US qt.)	
Power steering		0.9*l* (0.9 US qt.)	PSF-4
Coolant		6.0*l* (6.3 US qt.)	Mixture of antifreeze and water (Ethylene glycol base coolant for aluminum radiator)
Brake/Clutch fluid		0.7~0.8*l* (0.7~0.8 US qt.)	FMVSS116 DOT-3 or DOT-4
Fuel		52*l* (13.7 US gal.)	-

*1 Refer to the recommended SAE viscosity numbers on the next page.

*2 Engine oils labeled Energy Conserving Oil are now available. Along with other additional benefits, they contribute to fuel economy by reducing the amount of fuel necessary to overcome engine friction. Often, these improvements are difficult to measure in everyday driving, but in a year's time, they can offer significant cost and energy savings.

*3 If the API service SM engine oil is not available in your country, you are able to use API service SL.

امداد خودرو فارما
تلفن شبانه روزی: ۰۲۱-۸۸۸۶۲۰۸۵
FarmaSOS.com

I040100ATD-EU

Recommended SAE viscosity number

⚠ CAUTION

Always be sure to clean the area around any filler plug, drain plug, or dipstick before checking or draining any lubricant. This is especially important in dusty or sandy areas and when the vehicle is used on unpaved roads. Cleaning the plug and dipstick areas will prevent dirt and grit from entering the engine and other mechanisms that could be damaged.

Engine oil viscosity (thickness) has an effect on fuel economy and cold weather operation (engine start and engine oil flowability). Lower viscosity engine oils can provide better fuel economy and cold weather performance, however, higher viscosity engine oils are required for satisfactory lubrication in hot weather. Using oils of any viscosity other than those recommended could result in engine damage.

When choosing an oil, consider the range of temperature your vehicle will be operated in before the next oil change. Proceed to select the recommended oil viscosity from the chart.

امداد خودرو فارما
تلفن شبانه روزی: ۰۲۱۸۸۸۴۲۰۸۵
FarmaSOS.com

Temperature Range for SAE Viscosity Numbers

Temperature										
	°C	-30	-20	-10	0	10	20	30	40	50
	(°F)	-10	0	20	40	60	80	100	120	
Gasoline Engine Oil *1				10W-30						
		5W-20, 5W-30								

1. For better fuel economy, it is recommended to use the engine oil of a viscosity grade SAE 5W-20 (API SM / ILSAC GF-4). However, if the engine oil is not available in your country, select the proper engine oil using the engine oil viscosity chart.

AMERICAN PETROLEUM INSTITUTE FOR GASOLINE ENGINES CERTIFIED

VEHICLE IDENTIFICATION NUMBER (VIN)

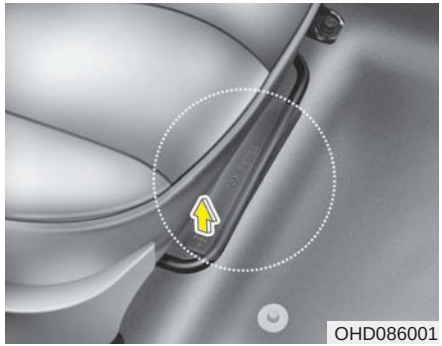

H010000APB

The vehicle identification number (VIN) is the number used in registering your vehicle and in all legal matters pertaining to its ownership, etc.

VIN Label (if equipped)

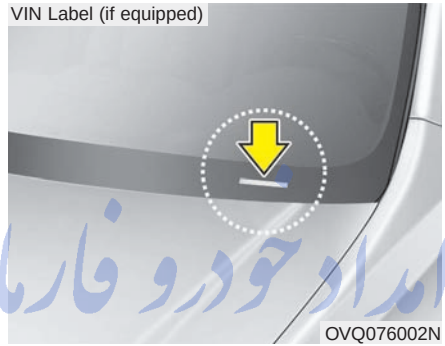

H010010AAM

VIN label (if equipped)

The VIN is also on a plate attached to the top of the dashboard. The number on the plate can easily be seen through the windshield from outside.

FarmaSOS.com

VEHICLE CERTIFICATION LABEL

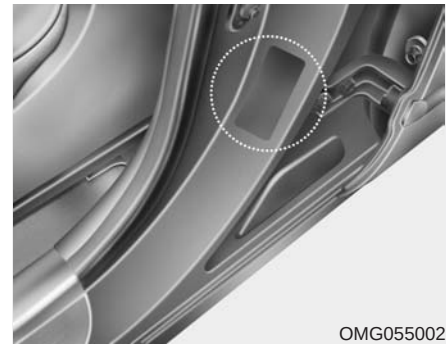

H020000AEN

The vehicle certification label attatched on the driver's (or front passenger's) side center pillar gives the vehicle identification number (VIN).

TIRE SPECIFICATION AND PRESSURE LABEL

OMG055004

H030000APB

The tires supplied on your new vehicle are chosen to provide the best performance for normal driving.

The tire label located on the driver's side center pillar gives the tire pressures recommended for your vehicle.

ENGINE NUMBER

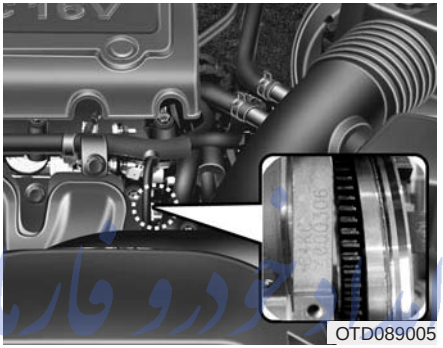
OTD089005

H04000AUN

The engine number is stamped on the engine block as shown in the drawing.

تلفن شبانه روزی: ۰۲۱-۸۸۸۶۲۰۸۵
FarmaSOS.com